Emergency Escape and Rescue Window

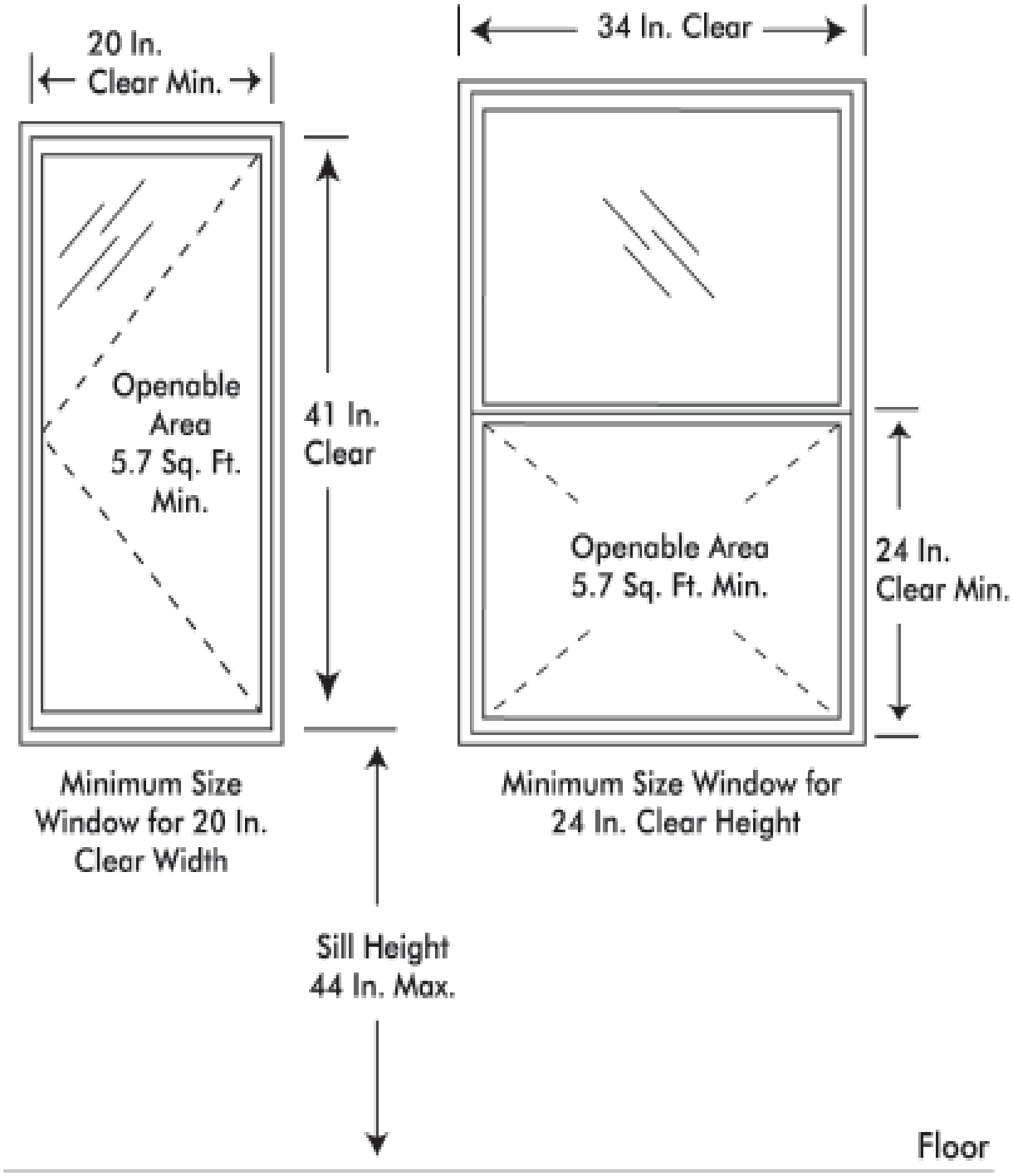
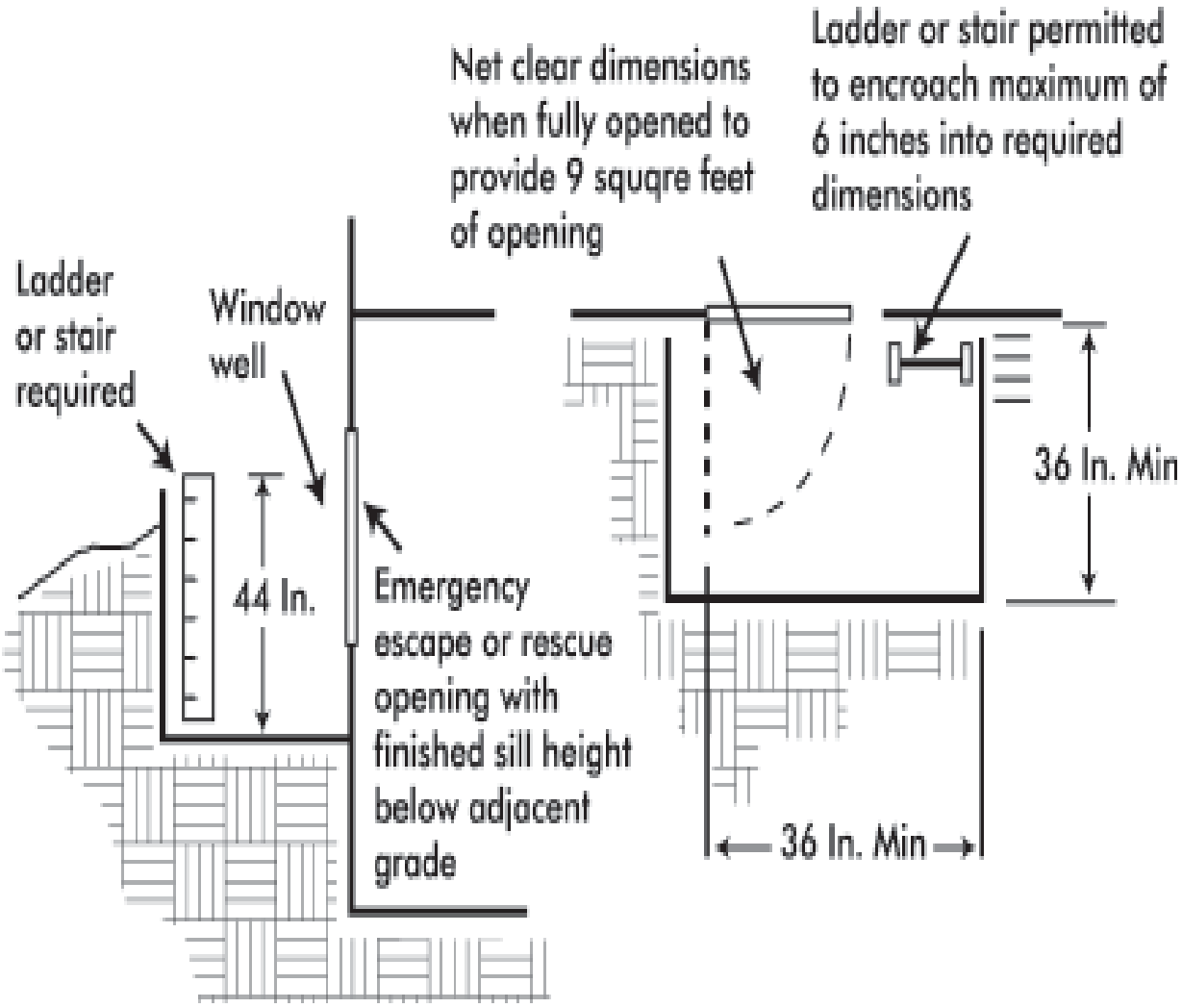
Window Wells