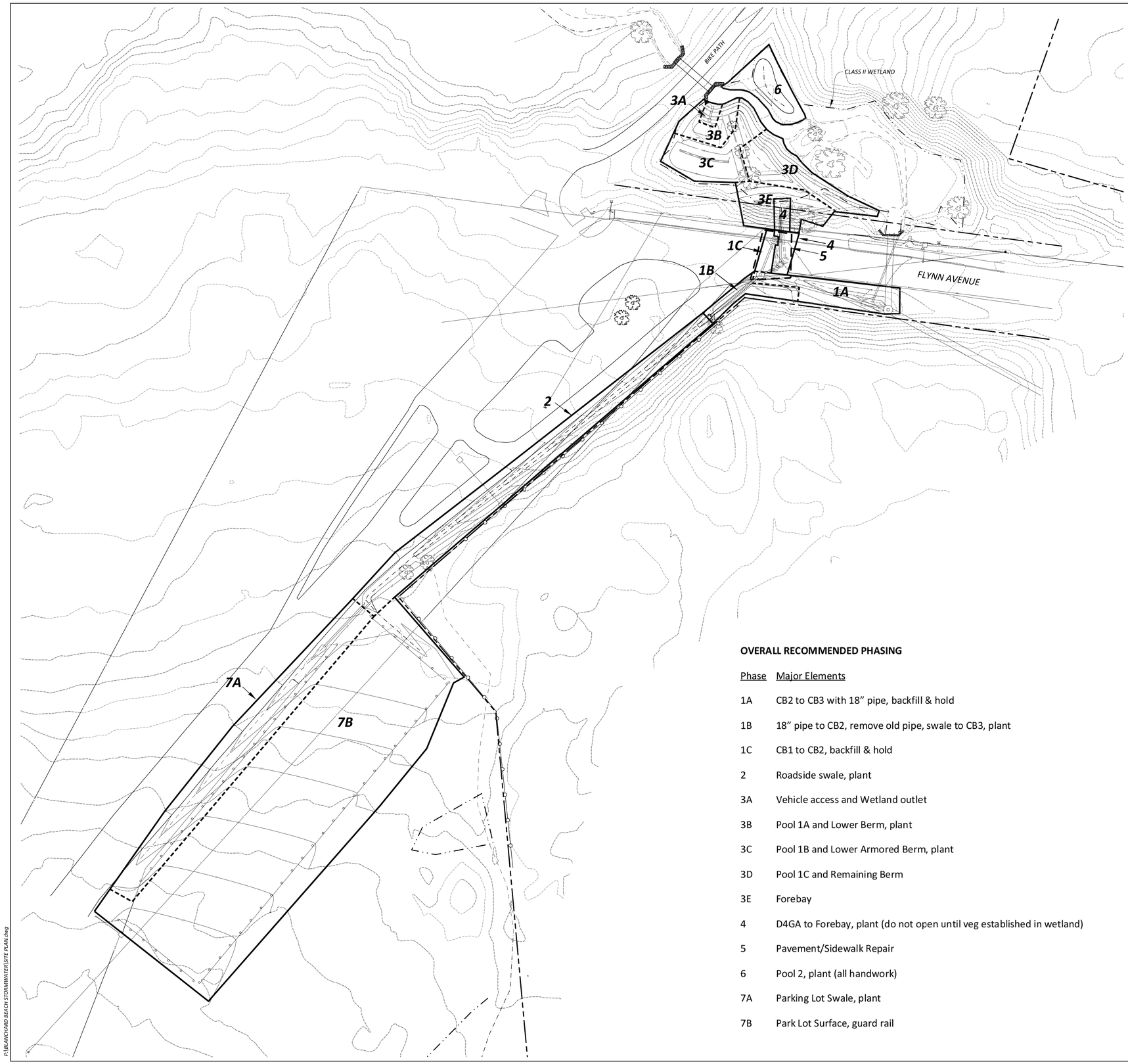

OVERALL RECOMMENDED PHASING

Phase	Major Elements
1A	CB2 to CB3 with 18" pipe, backfill & hold
1B	18" pipe to CB2, remove old pipe, swale to CB3, plant
1C	CB1 to CB2, backfill & hold
2	Roadside swale, plant
3A	Vehicle access and Wetland outlet
3B	Pool 1A and Lower Berm, plant
3C	Pool 1B and Lower Armored Berm, plant
3D	Pool 1C and Remaining Berm
3E	Forebay
4	D4GA to Forebay, plant (do not open until veg established in wetland)
5	Pavement/Sidewalk Repair
6	Pool 2, plant (all handwork)
7A	Parking Lot Swale, plant
7B	Park Lot Surface, guard rail

LEGEND

- APPROXIMATE PROPERTY LINE
- EXISTING GROUND CONTOUR
- PROPOSED FINISH GRADE CONTOUR
- STREAM
- CLASS II WETLAND
- S — SANITARY SEWER
- W — WATER LINE
- O/E — OVERHEAD ELECTRIC
- U/E — UNDERGROUND ELECTRIC
- UTILITY POLE
- HYDRANT
- SEWER MANHOLE

WETLAND DELINEATION BY OAKLEDGE ENVIRONMENTAL

30 0 15 30 60 120

(IN FEET)
1 inch = 30 ft.

BLANCHARD BEACH WETLAND RESTORATION

FLYNN AVENUE & OAKLEDGE PARK/BURLINGTON, VERMONT

OVERALL LAYOUT & SEQUENCE PLAN

LAKESIDE ENVIRONMENTAL GROUP
P.O. BOX 4081
BURLINGTON, VT 05406
P: (802) 489-5214
WWW.LEGVT.COM

DRAWN BY:	SMS
CHECKED BY:	ATS
APPROVED BY:	ATS
DATE:	8-2-12.
SCALE:	NOTED
SHEET:	1 OF 8

WATERSHED CONSULTING ASSOCIATES, LLC
P.O. BOX 1085
WAITSFIELD, VT 05673
P: (802) 496-5130 F: (802) 496-5131
www.watershedca.com
specializing in stormwater management and erosion-sediment control

P:\BLANCHARD BEACH STORMWATER\SITE PLAN.dwg

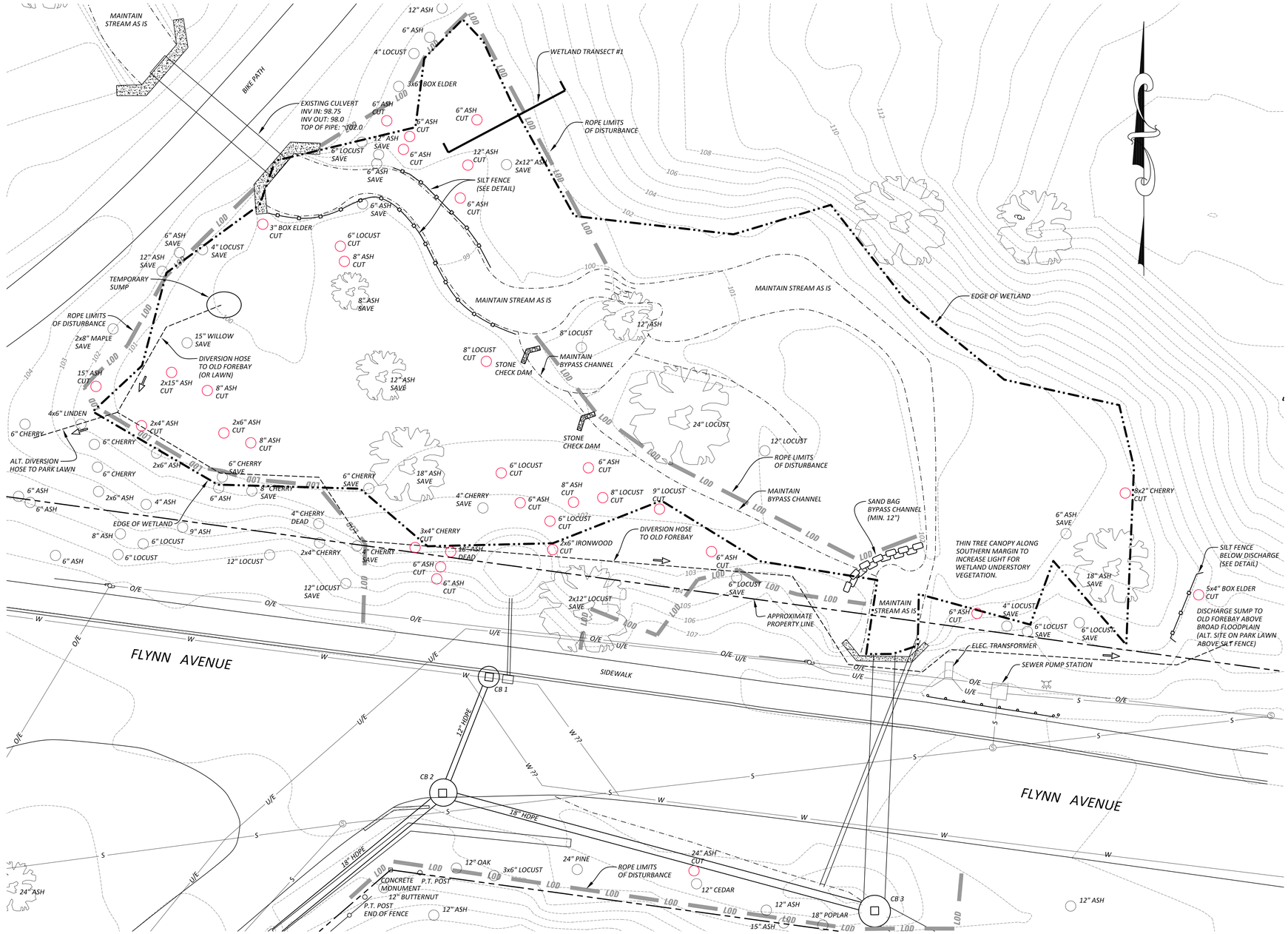

EROSION PREVENTION & SEDIMENT CONTROL SEQUENCE

1. DIVERT STORMWATER FROM EXISTING FOREBAY BY CONSTRUCTING CB 1, CB 2, CB 3 AND ASSOCIATED CONNECTING PIPES.
2. INSTALL ROPE LIMITS OF DISTURBANCE.
3. INSTALL SILT FENCE ALONG STREAM.
4. SAND BAG STREAM BYPASS CHANNELS.
5. INSTALL CHECK DAMS IN BYPASS CHANNEL.
6. SET UP SUMP AND SETTLING AREA.
7. MARK ALL TREES TO BE SAVED WITH ROPING.

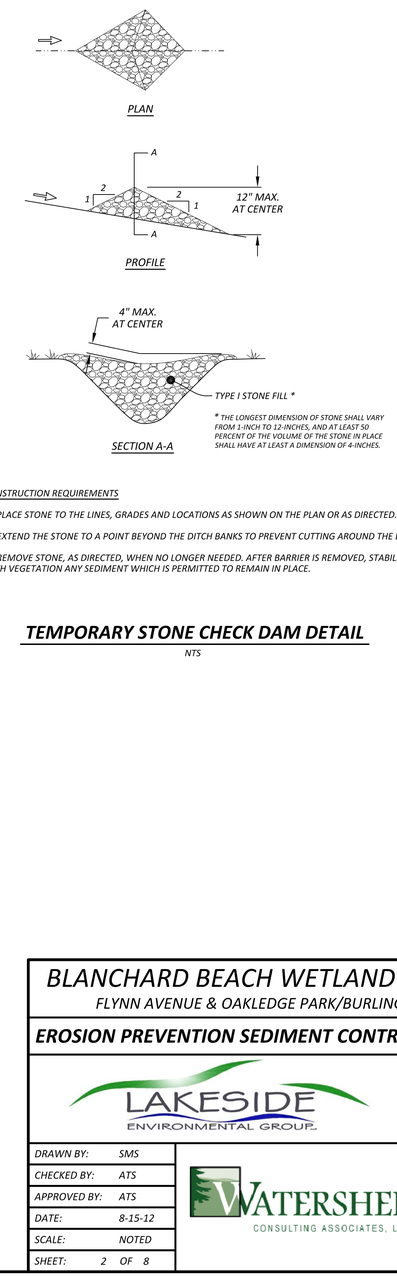

CONSTRUCTION REQUIREMENTS

1. PLACE STONE TO THE LINES, GRADES AND LOCATIONS AS SHOWN ON THE PLAN OR AS DIRECTED.
2. EXTEND THE STONE TO A POINT BEYOND THE DITCH BANKS TO PREVENT CUTTING AROUND THE DAM.
3. REMOVE STONE, AS DIRECTED, WHEN NO LONGER NEEDED. AFTER BARRIER IS REMOVED, STABILIZE WITH VEGETATION ANY SEDIMENT WHICH IS PERMITTED TO REMAIN IN PLACE.

TEMPORARY STONE CHECK DAM DETAIL

NTS

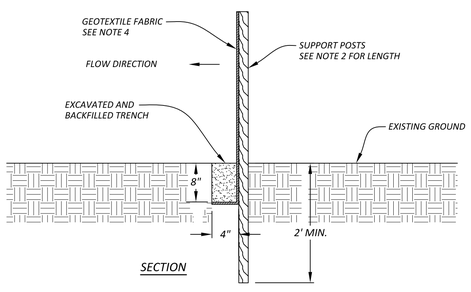

SILT FENCE DETAIL

NTS

NOTES

1. SILT FENCE WILL BE USED IN AREAS TO PREVENT SEDIMENT TRANSPORT FROM UPSLOPE AREAS AWAITING STABILIZATION. IT SHALL ALSO BE USED AS PART OF THE TEMPORARY EROSION CONTROL MEASURES AROUND MATERIAL STOCKPILES AND DOWN SLOPE OR EQUIPMENT STAGING AREAS.
2. THE GEOTEXTILE FABRIC SHALL BE PLACED IN THE EXCAVATED TRENCH, BACKFILLED AND COMPACTED TO THE EXISTING GROUND SURFACE.
3. WOODED SUPPORT POSTS SHALL BE A MINIMUM DIMENSION OF 1-1/8" X 1-1/8" AND 4 FEET LONG. STEEL POSTS SHALL BE STUDDED "TEE" OR "U" TYPE AND 5 FEET LONG. POST SPACING SHALL BE A MAXIMUM OF 8 FEET FOR WOVEN FABRIC AND 3 FEET FOR NON-WOVEN FABRIC.
4. THE GEOTEXTILE FABRIC SHALL BE ATTACHED DIRECTLY TO THE UPSLOPE SIDE OF WOODEN POSTS WITH 0.5 INCH STAPLES IN AT LEAST 3 PLACES, OR WITH WOODEN LATH AND NAILS. ATTACHMENT TO STEEL POSTS WILL BE BY WIRE FASTENERS OR 50 POUND PLASTIC TIE STRAPS ON THE UPSLOPE SIDE.
5. THE GEOTEXTILE FABRIC SHALL CONSIST OF EITHER WOVEN OR NON-WOVEN POLYESTER, POLYPROPYLENE, STABILIZED NYLON, POLYETHYLENE, OR POLYVINYLIDENE CHLORIDE. NON-WOVEN FABRIC MAY BE NEEDLE PUNCHED, HEAT BONDED, RESIN BONDED, OR COMBINATIONS THEREOF.
6. SILT FENCE SHALL BE INSTALLED AS SHOWN ON PLAN.
7. SILT FENCES BARRIERS SHALL BE INSPECTED FOR ANY TEARS OR BREAKS. ANY REQUIRED REPAIRS SHALL BE MADE IMMEDIATELY.
8. SEDIMENT SHOULD BE REMOVED WHEN IT REACHES 1/3 HEIGHT OF THE FENCE. THE REMOVED SEDIMENT MAY BE USED AS FILL ELSEWHERE ON SITE AND SHALL BE VEGETATED OR OTHERWISE STABILIZED.
9. REMOVE SILT FENCE, AS DIRECTED, WHEN NO LONGER NEEDED. BEFORE THE SILT FENCE IS REMOVED, STABILIZE WITH VEGETATION ANY SEDIMENT WHICH IS PERMITTED TO REMAIN IN PLACE.

10 0 5 10 20 40

(IN FEET)
1 inch = 10 ft.

LEGEND

- APPROXIMATE PROPERTY LINE
- EXISTING GROUND CONTOUR
- STREAM
- CLASS II WETLAND
- S — SANITARY SEWER
- W — WATER LINE
- O/E — OVERHEAD ELECTRIC
- U/E — UNDERGROUND ELECTRIC
- SILT FENCE
- LOD — LIMITS OF DISTURBANCE CORDON
- UTILITY POLE
- HYDRANT
- SEWER MANHOLE

WETLAND DELINEATION BY OAKLEDGE ENVIRONMENTAL

BLANCHARD BEACH WETLAND RESTORATION

FLYNN AVENUE & OAKLEDGE PARK/BURLINGTON, VERMONT

EROSION PREVENTION SEDIMENT CONTROL & CUTTING PLAN

LAKESIDE ENVIRONMENTAL GROUP
P.O. BOX 4081
BURLINGTON, VT 05406
P: (802) 489-5214
WWW.LEGVT.COM

DRAWN BY:	SMS
CHECKED BY:	ATS
APPROVED BY:	ATS
DATE:	8-15-12
SCALE:	NOTED
SHEET:	2 OF 8

WATERSHED CONSULTING ASSOCIATES, LLC
P.O. BOX 1085
WAITSFIELD, VT 05673
P: (802) 496-5130 F: (802) 496-5131
www.watershedca.com
"specializing in stormwater management and erosion-sediment control"

P:\BLANCHARD BEACH STORMWATER\SITE PLAN.dwg

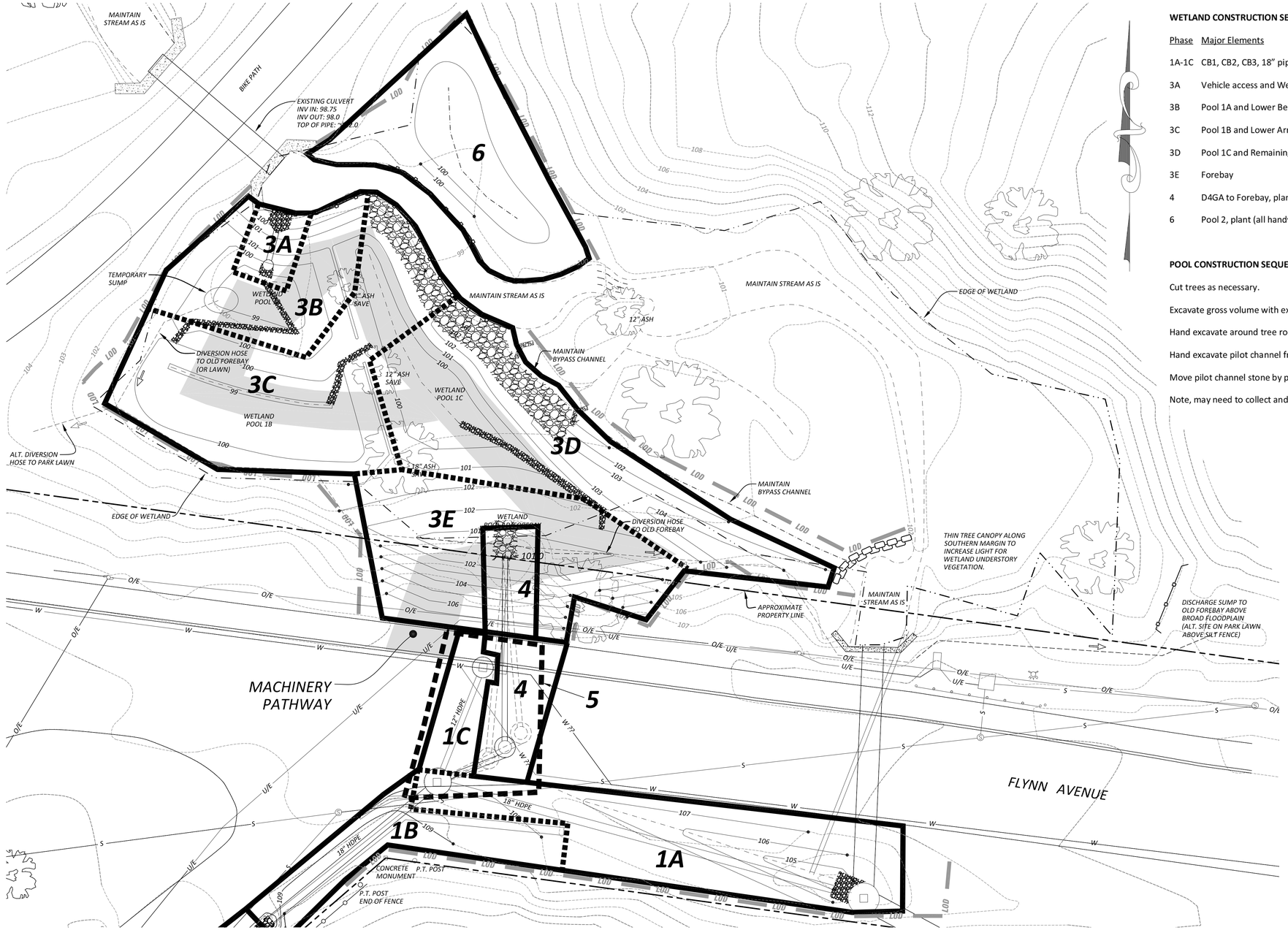

WETLAND CONSTRUCTION SEQUENCE

Phase	Major Elements	Purpose & Notes
1A-1C	CB1, CB2, CB3, 18" pipes	Establish stormwater bypass before work in wetland
3A	Vehicle access and Wetland outlet	Start with pipe at lowest end and work toward street
3B	Pool 1A and Lower Berm, plant	Finish lowest berm, start on stream side, use pool tailings, progress streetward
3C	Pool 1B and Lower Armored Berm, plant	Establish armored berm, start on stream side, use pool tailings, progress streetward
3D	Pool 1C and Remaining Berm	Finish berm, use pool tailings, haul in remainder, close most of wetland construction
3E	Forebay	Finish grading in wetland
4	D4GA to Forebay, plant	Finish pipes at upper end
6	Pool 2, plant (all handwork)	Work on north side stream by hand, enter from bike path

POOL CONSTRUCTION SEQUENCE

Cut trees as necessary.

Excavate gross volume with excavator bucket to power wheelbarrow. Use planks for wheelbarrow travel.

Hand excavate around tree roots and to otherwise shape pool to specified depth.

Hand excavate pilot channel from pool above.

Move pilot channel stone by power wheelbarrow, place in channel by hand.

Note, may need to collect and diver groundwater in sump area, discharge to old forebay or to park lawn.

10 0 5 10 20 40

(IN FEET)
1 inch = 10 ft.

LEGEND

- APPROXIMATE PROPERTY LINE
- EXISTING GROUND CONTOUR
- STREAM
- CLASS II WETLAND
- S — SANITARY SEWER
- W — WATER LINE
- O/E — OVERHEAD ELECTRIC
- U/E — UNDERGROUND ELECTRIC
- SILT FENCE
- LOD — LIMITS OF DISTURBANCE CORDON
- UTILITY POLE
- HYDRANT
- SEWER MANHOLE

WETLAND DELINEATION BY OAKLEDGE ENVIRONMENTAL

BLANCHARD BEACH WETLAND RESTORATION

FLYNN AVENUE & OAKLEDGE PARK/BURLINGTON, VERMONT

CONSTRUCTION SEQUENCE PLAN WETLAND/ROAD AREA

LAKESIDE ENVIRONMENTAL GROUP
P.O. BOX 4081
BURLINGTON, VT 05406
P: (802) 489-5214
WWW.LEGVT.COM

DRAWN BY:	SMS
CHECKED BY:	ATS
APPROVED BY:	ATS
DATE:	8-1-12
SCALE:	NOTED
SHEET:	3 OF 8

WATERSHED CONSULTING ASSOCIATES, LLC
P.O. BOX 1085
WAITSFIELD, VT 05673
P: (802) 496-5130 F: (802) 496-5131
www.watershedca.com
specializing in stormwater management and erosion-sediment control

P:\BLANCHARD BEACH STORMWATER\SITE PLAN.dwg

WETLAND IMPACTS IN ZONE #1 WILL TOTAL 3,880 SF AS SHOWN (INCLUDES EXCAVATION, FILL, AND INUNDATION AREAS).

WETLAND IMPACTS IN ZONE #2 WILL ADD 740 SF AS SHOWN (INCLUDES EXCAVATION & FILL AREAS).

THE TOTAL WETLAND IMPACTS ARE LESS THAN THE COE INDIVIDUAL PERMIT REVIEW THRESHOLD OF 5,000 SF.

MAINTAIN STREAM AS IS

BIKE PATH

EXISTING CULVERT
INV IN: 98.75
INV OUT: 98.0
TOP OF PIPE: ~102.0

LOW BERM AT 101.5+
TO SEQUESTER WQv IN ZONE #1.
OVERFLOW SET AT 101.0 FOR
2,600 CF OF STORAGE.
ARMOR BERM ON STREAM SIDE
WITH BOULDERS/STONE.

12" OUTLET STRUCTURE
RIM: 100.0
ORIFICE: 99.5
INV OUT: 98.75
(SEE DETAIL)

INV: 98.75

WETLAND ZONE #2
LOWER SOIL FROM 100.3 TO 99.3+
OVERFLOW AT 100.0
ADD WETLAND VEGETATION

THIN TREE CANOPY ALONG
SOUTHERN MARGIN TO
INCREASE LIGHT FOR
WETLAND UNDERSTORY
VEGETATION.

REINFORCED BERM
(SEE DETAIL)

WETLAND POOL 1A
LOWER SOIL FROM
99.6 TO 98.5+
OVERFLOW AT 99.5

8" ASH
SAVE

12" ASH

PILOT CHANNEL

MAINTAIN
BYPASS CHANNEL

12" ASH
SAVE

WETLAND POOL 1C
LOWER SOIL FROM
100.5 TO 99.5+
OVERFLOW AT 100.5

WETLAND POOL 1B
LOWER SOIL FROM
100.3 TO 99.0+
OVERFLOW AT 100.0

THIN TREE CANOPY ALONG
SOUTHERN MARGIN TO
INCREASE LIGHT FOR
WETLAND UNDERSTORY
VEGETATION.

18" ASH
SAVE

PILOT CHANNEL

EDGE OF WETLAND

WETLAND POOL 1D/FOREBAY
LOWER SOIL FROM
102.0 TO 101.0
OVERFLOW AT 102.0

THIN TREE CANOPY ALONG
SOUTHERN MARGIN TO
INCREASE LIGHT FOR
WETLAND UNDERSTORY
VEGETATION.

= 101.0

MAINTAIN
BYPASS CHANNEL

APPROXIMATE
PROPERTY LINE

MAINTAIN STREAM AS IS

EDGE OF WETLAND

WETLAND ZONE #3
DO NOT REMOVE SOILS
PLANT WETLAND VEGETATION

THIN TREE CANOPY ALONG
SOUTHERN MARGIN TO
INCREASE LIGHT FOR
WETLAND UNDERSTORY
VEGETATION.

CUT SIDEWALK

REMOVE EXISTING CB AND PIPE

CB 1 = 36" DIA.
RIM: 107.3
INV OUT: 105.0
(FILL & SHAPE BOTTOM
GUTTER TO 12" OUT)

CUT PAVEMENT

HYDRO INT'L MODEL D4GA
48" DIA.
RIM: 107.5
INV IN: 102.5
INV OUT: 103.5
(SHIFT HORIZ 2-3'
AS NEEDED TO AVOID
8" WATER MAIN)

12" HDPE

CB 2 = 60" DIA.
RIM: 107.5
INV IN 18": 105.0
INV IN 12": 104.5
INV OUT 18": 105.0
INV OUT 12": 103.5
(SHAPE GUTTER IN
BOTTOM TO 12" OUT)

18" HDPE

38"x 57" CMP INV~101.75'
8" SEWER INV~101.5'
ASSUME SEWER JUST BELOW
CMP

EXISTING
10" SDR 35

EXISTING
38"x 57" CMP
INV IN=101.0'
INV OUT=100.5'

FLYNN AVENUE

SEWER MH (WET WELL)
RIM=108.25'
8" INV IN~100.8'

SEWER MH
RIM=107.85'
8" INV OUT=104.7'
8" INV IN=104.9'
6" INV IN=105.4'

8" SEWER INV=104.3'
18" STORM INV=105.3'

8" SEWER INV=103.8'
18" STORM INV=104.75'

INV 18" PIPE=104.0'
(MIDPOINT)

CONCRETE
MONUMENT

P.T. POST

P.T. POST
END OF FENCE

OVERFLOW PIPE FROM
MIXED DRAINAGE TO STREAM

REMOVE EXISTING
18" CMP AT CORNER

REPLACE STRUCTURE TO TURN PIPED STREAM,
MAINTAIN FREE FLOW OF STREAM. ADD OPENING TO
RECEIVE EXCESS DRAINAGE FROM PARK.
ADD GRATE TO CAPTURE LOCAL DRAINAGE.

PIPE TO COLLECT MIXED DRAINAGE FROM
SWALE, ROUTED TO SWIRL SEPARATOR AND
WETLAND ZONE 1, OVERFLOW TO STREAM
VIA PIPE

18" LOCUST
(SAVE)

CB 3 = 72" DIA.
RIM: 107.9
INV IN SIDE: 104.5
INV IN 18": 103.0
INV IN 48": 101.0
INV OUT 38"x 57": 101.0
(ALL EXSTING INVERTS FROM
FITZPATRICK-LLEWELLYN PLAN, 1986)
(RAISE SWALE IF SIDE INLET
IS ABANDONED IN FAVOR OF
TOP GRATE)

EXISTING 48" STREAM PIPE

ARMORED SWALE WITH REINFORCED TURF.
TO CARRY MIXED DRAINAGE
TO SWIRL SEPERATOR AND WETLAND ZONE 1
WITH OVERFLOW TO STREAM.
(SEE DETAIL)

LEGEND

- APPROXIMATE PROPERTY LINE
- EXISTING GROUND CONTOUR
- PROPOSED FINISH GRADE CONTOUR
- STREAM
- CLASS II WETLAND
- S — SANITARY SEWER
- W — WATER LINE
- O/E — OVERHEAD ELECTRIC
- U/E — UNDERGROUND ELECTRIC
- UTILITY POLE
- HYDRANT
- SEWER MANHOLE

WETLAND DELINEATION BY OAKLEDGE ENVIRONMENTAL

10 0 5 10 20 40

(IN FEET)
1 inch = 10 ft.

BLANCHARD BEACH WETLAND RESTORATION

FLYNN AVENUE & OAKLEDGE PARK/BURLINGTON, VERMONT

GRADING PLAN WETLAND/ROAD AREA

LAKESIDE ENVIRONMENTAL GROUP

P.O. BOX 4081
BURLINGTON, VT 05406
P: (802) 489-5214
WWW.LEGVT.COM

DRAWN BY:	SMS
CHECKED BY:	ATS
APPROVED BY:	ATS
DATE:	8-2-12.
SCALE:	NOTED
SHEET:	4 OF 8

WATERSHED CONSULTING ASSOCIATES, LLC

P.O. BOX 1085
WAITSFIELD, VT 05673
P: (802) 496-5130 F: (802) 496-5131
www.watershedca.com

specializing in stormwater management and erosion-sediment control

P:\BLANCHARD BEACH STORMWATER\SITE PLAN.dwg

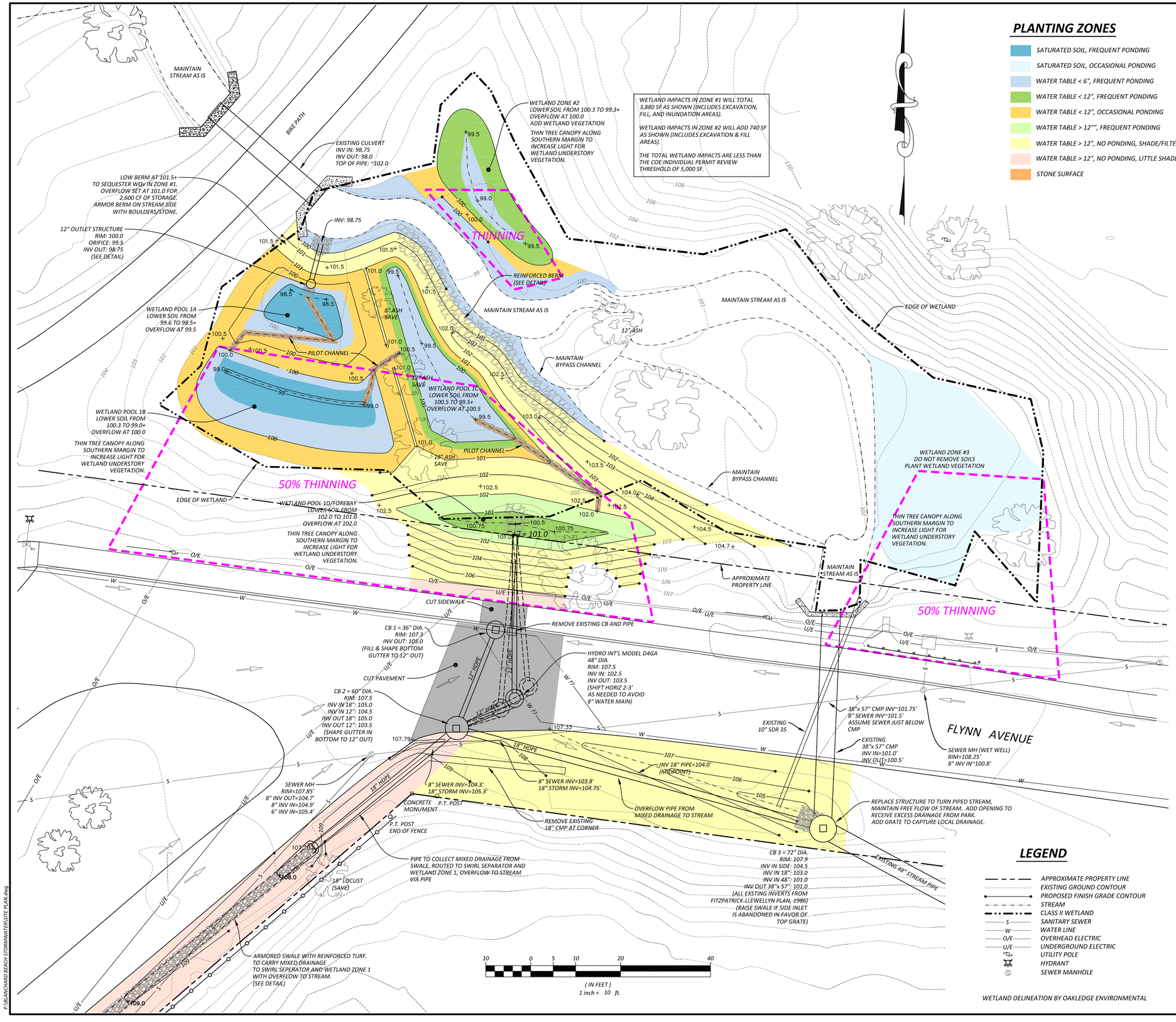

PLANTING ZONES

- SATURATED SOIL, FREQUENT PONDING
- SATURATED SOIL, OCCASIONAL PONDING
- WATER TABLE < 6", FREQUENT PONDING
- WATER TABLE < 12", FREQUENT PONDING
- WATER TABLE < 12", OCCASIONAL PONDING
- WATER TABLE > 12"", FREQUENT PONDING
- WATER TABLE > 12", NO PONDING, SHADE/FILTERED SUN
- WATER TABLE > 12", NO PONDING, LITTLE SHADE
- STONE SURFACE

PLANTING LIST BY ZONE

Common Name	Botanical Name	Form	Height	Quantity
PROVIDED, PLANTED, AND WARRANTEED ONE YEAR BY VERMONT WETLAND PLANT SUPPLY				
Saturated Soil, Frequent Ponding (space 2 ft on center)				
Broadleaf arrowhead	Sagittaria latifolia	2-inch plug		105
Pickerelweed	Pontederia cordata	bare root		1
Common threesquare	Schoenoplectus pungens	2-inch plug		1
American bur-reed	Sparganium americanum	bare root		1
Wetland seed mix (lb/1000sf)		seed		0.5 lb
Saturated Soil, Occasional Ponding (space 2 ft on center)				
Long-hair sedge	Carex comosa	2-inch plug		325
Broadfruited bur-reed	Sparganium eurycarpum	2-inch plug		1
Common threesquare	Schoenoplectus pungens	2-inch plug		1
Northern water plantain	Alisma subcordatum	bare root		1
Sweetflag	Acorus americanus	2-inch plug		1
Bluejoint	Calamagrostis canadensis	2-inch plug		1
Blueflag iris	Iris versicolor	2-inch plug		1
Marsh spikerush	Eleocharis palustris	2-inch plug		1
Swamp milkweed	Asclepias incarnata	2-inch plug		1
Monkey flower	Mimulus ringens	2-inch plug		1
Wetland seed mix (lb/1000sf)		seed		1.5 lb
Shrubs (spacing 10 feet on-center)				
Buttonbush	Cephalanthus occidentalis	1 or 2 gal. container	2-3 feet height	13
Water Table <6", Frequent Ponding (space 2 ft on center)				
Green bulrush	Scirpus atrovirens	2-inch plug		365
Bluejoint	Calamagrostis canadensis	2-inch plug		1
Shallow sedge	Carex lurida	2-inch plug		1
Fox sedge	Carex vulpinoidea	2-inch plug		1
Blueflag iris	Iris versicolor	2-inch plug		1
Monkey flower	Mimulus ringens	2-inch plug		1
Joe-pye weed	Eupatoriadelphus maculatus	2-inch plug		1
Boneset	Eupatorium perfoliatum	2-inch plug		1
Cardinal flower	Lobelia cardinalis	2-inch plug		1
Blue lobelia	Lobelia siphilitica	2-inch plug		
Wetland seed mix (lb/1000sf)		seed		1.5 lb
Shrubs (spacing 10 feet on-center)				
Speckled alder	Alnus rugosa	1 or 2 gal. container	2-3 feet height	15
Buttonbush	Cephalanthus occidentalis	1 or 2 gal. container	2-3 feet height	1
Red osier dogwood	Cornus sericea	1 gal. container	2-3 feet height	1
Silky dogwood	Cornus amomum	1 gal. container	2-3 feet height	1
Water Table <12" Frequent Ponding (space 2 ft on center)				
Joe-pye weed	Eupatoriadelphus maculatus	2-inch plug		145
Boneset	Eupatorium perfoliatum	2-inch plug		1
Fox sedge	Carex vulpinoidea	2-inch plug		1
Green bulrush	Scirpus atrovirens	2-inch plug		1
Cardinal flower	Lobelia cardinalis	2-inch plug		1
Blue lobelia	Lobelia siphilitica	2-inch plug		1
Wetland seed mix (lb/1000sf)		seed		0.5 lb
Shrubs (spacing 10 feet on-center)				
Speckled alder	Alnus rugosa	1 or 2 gal. container	2-3 feet height	6
Buttonbush	Cephalanthus occidentalis	1 or 2 gal. container	2-3 feet height	1
Red osier dogwood	Cornus sericea	1 gal. container	2-3 feet height	1
Silky dogwood	Cornus amomum	1 gal. container	2-3 feet height	1
Willow shrubs	Salix sp.	1 gal. container	2-3 feet height	1
Water Table <12" Occasional Ponding (space 2 ft on center)				
Joe-pye weed	Eupatoriadelphus maculatus	2-inch plug		315
Boneset	Eupatorium perfoliatum	2-inch plug		1
Fox sedge	Carex vulpinoidea	2-inch plug		1
Green bulrush	Scirpus atrovirens	2-inch plug		1
Wetland seed mix (lb/1000sf)		seed		1.0 lb
Water Table >12" Frequent Ponding				
Upland Grass Seed Mix, Shade, Damp		seed		0.5 lb
OBTAINED AND INSTALLED BY CITY				
Water Table >12" No Ponding, Filtered Light				
Upland Grass Seed Mix, Shade		seed		3.5 lbs
Water Table >12" No Ponding, Little Shade				
Upland Grass Seed Mix, Sun		seed		14 lbs

LEGEND

- APPROXIMATE PROPERTY LINE
- EXISTING GROUND CONTOUR
- PROPOSED FINISH GRADE CONTOUR
- STREAM
- CLASS II WETLAND
- S — SANITARY SEWER
- W — WATER LINE
- O/E — OVERHEAD ELECTRIC
- U/E — UNDERGROUND ELECTRIC
- UTILITY POLE
- HYDRANT
- SEWER MANHOLE

WETLAND DELINEATION BY OAKLEDGE ENVIRONMENTAL

BLANCHARD BEACH WETLAND RESTORATION

FLYNN AVENUE & OAKLEDGE PARK/BURLINGTON, VERMONT

PLANTING PLAN

LAKESIDE ENVIRONMENTAL GROUP
P.O. BOX 4081
BURLINGTON, VT 05406
P: (802) 489-5214
WWW.LEGVT.COM

DRAWN BY:	SMS
CHECKED BY:	ATS
APPROVED BY:	ATS
DATE:	8-2-12.
SCALE:	NOTED
SHEET:	5 OF 8

WATERSHED CONSULTING ASSOCIATES, LLC
P.O. BOX 1085
WAITSFIELD, VT 05673
P: (802) 496-5130 F: (802) 496-5131
www.watershedca.com
specializing in stormwater management and erosion-sediment control

P:\BLANCHARD BEACH\STORMWATER\SITE PLAN.dwg

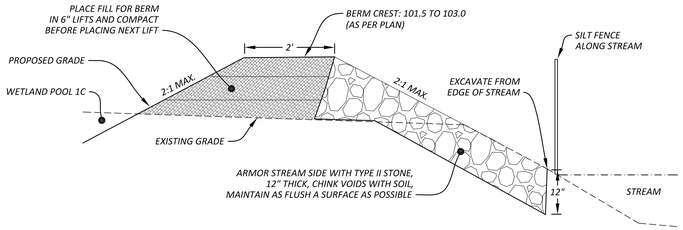

REINFORCED BERM DETAIL

NTS

TYPE II STONE FILL
(VAOT SEC. 706.04(A))
THE LONGEST DIMENSION OF THE STONE SHALL VARY FROM 2 INCHES TO 36 INCHES, AND AT LEAST 50 PERCENT OF THE VOLUME OF THE STONE IN PLACE SHALL HAVE A LEAST DIMENSION OF 12 INCHES.

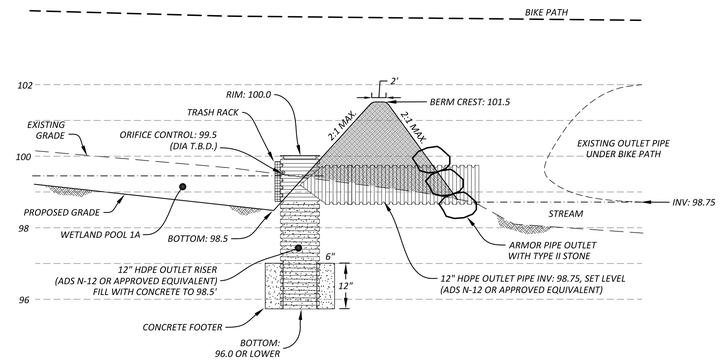

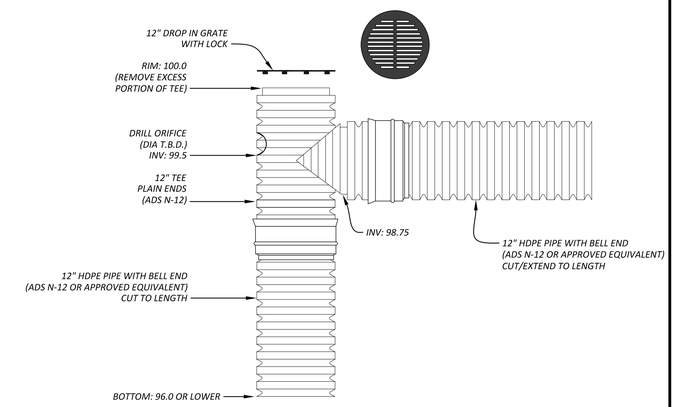

WETLAND OUTLET DETAIL

NTS

NOTE:
INVERTS OF EXISTING PIPES FROM 1986
FITZPATRICK/LLEWELLYN PLAN FOR SOUTHWIND.

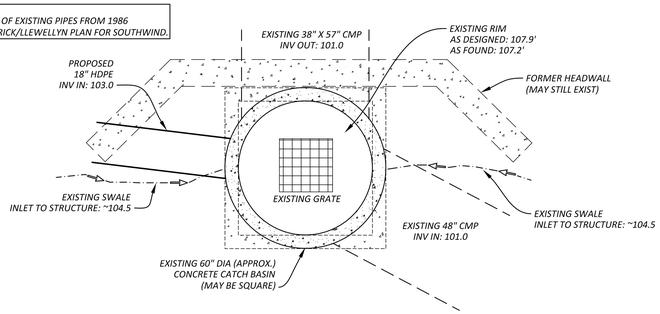

PLAN VIEW

CB 3 CATCH BASIN DETAIL

NTS

STRUCTURE OPTIONS

1. Pull structure cover & preserve
2. Assess structure condition
3. Determine whether headwall remains

USE EXISTING STRUCTURE

4. Assess options for 18" HDPE pipe entry
5. Design & core 18" pipe entry
6. Repair structure as needed
7. Repair or replace structure cover

IF CORING NOT POSSIBLE:

4. Terminate 18" pipe in swale at invert higher than side inlet
5. Shape & stabilize swale from pipe to structure
6. Repair structure as needed
7. Repair or replace structure cover

REPLACE STRUCTURE

4. Document existing structure
5. Design replacement structure with 18" pipe inlet
6. Construct new structure

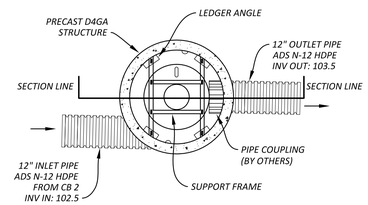

PLAN VIEW

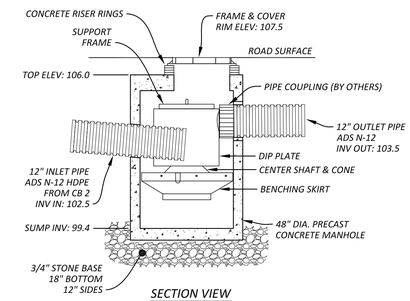

SECTION VIEW

HYDRO INT'L MODEL D4GA DOWNSTREAM DEFENDER DETAIL

NTS

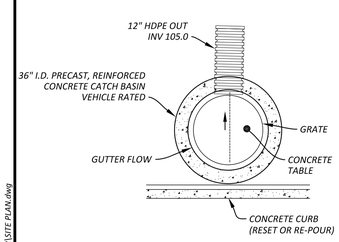

PLAN VIEW

NOTE:
HDPE PIPE SHALL BE ADS N-12

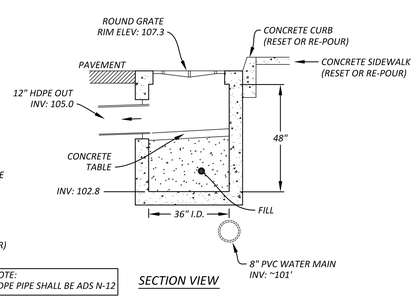

SECTION VIEW

CB 1 CATCH BASIN DETAIL

NTS

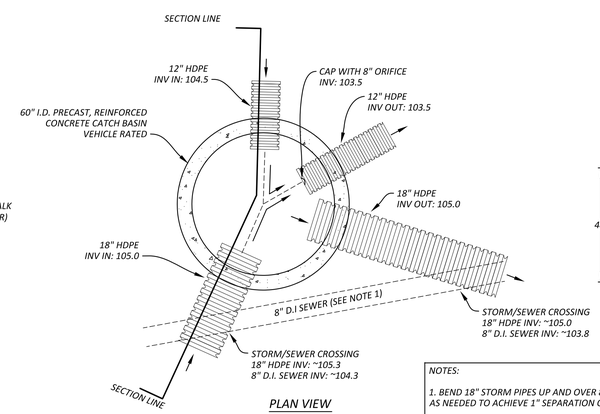

PLAN VIEW

NOTES:

1. BEND 18" STORM PIPES UP AND OVER 8" D.I. SEWER AS NEEDED TO ACHIEVE 1" SEPARATION OF MATERIALS
2. HDPE PIPE SHALL BE ADS N-12, OR EQUAL.

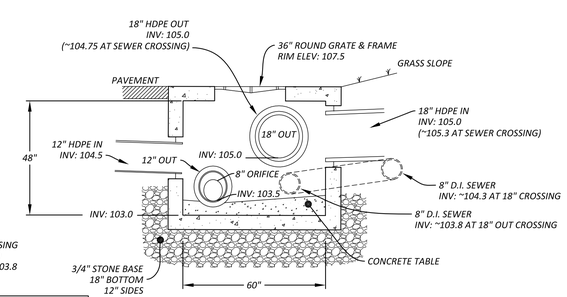

SECTION VIEW

CB 2 CATCH BASIN DETAIL

NTS

BLANCHARD BEACH WETLAND RESTORATION

FLYNN AVENUE & OAKLEDGE PARK/BURLINGTON, VERMONT

WETLAND AND STREET CONSTRUCTION DETAILS

LAKESIDE ENVIRONMENTAL GROUP
P.O. BOX 4081
BURLINGTON, VT 05406
P: (802) 489-5214
WWW.LEGVT.COM

DRAWN BY:	SMS
CHECKED BY:	ATS
APPROVED BY:	ATS
DATE:	8-2-12.
SCALE:	NOTED
SHEET:	6 OF 8

WATERSHED CONSULTING ASSOCIATES, LLC
P.O. BOX 1085
WAITSFIELD, VT 05673
P: (802) 496-5130 F: (802) 496-5131
www.watershedca.com
specializing in stormwater management and erosion-sediment control

P:\BLANCHARD BEACH\STORM\WATERLSITE PLAN.dwg

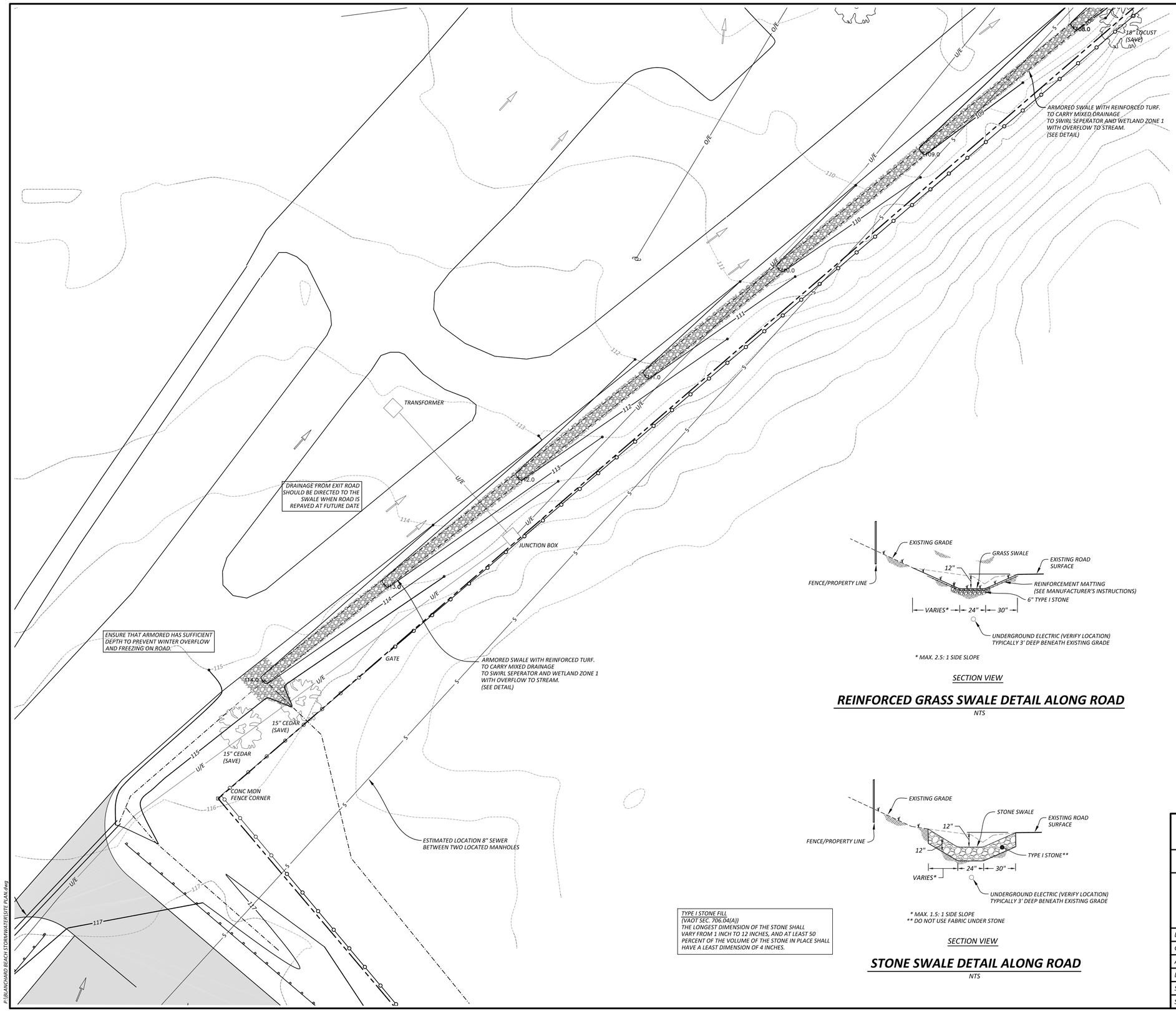

* MAX. 2.5: 1 SIDE SLOPE

SECTION VIEW

REINFORCED GRASS SWALE DETAIL ALONG ROAD

NTS

* MAX. 1.5: 1 SIDE SLOPE
** DO NOT USE FABRIC UNDER STONE

SECTION VIEW

STONE SWALE DETAIL ALONG ROAD

NTS

TYPE I STONE FILL
(VAOT SEC. 706.04(A))
THE LONGEST DIMENSION OF THE STONE SHALL VARY FROM 1 INCH TO 12 INCHES, AND AT LEAST 50 PERCENT OF THE VOLUME OF THE STONE IN PLACE SHALL HAVE A LEAST DIMENSION OF 4 INCHES.

LEGEND

- APPROXIMATE PROPERTY LINE
- EXISTING GROUND CONTOUR
- PROPOSED FINISH GRADE CONTOUR
- STREAM
- CLASS II WETLAND
- S — SANITARY SEWER
- W — WATER LINE
- O/E — OVERHEAD ELECTRIC
- U/E — UNDERGROUND ELECTRIC
- UTILITY POLE
- HYDRANT
- SEWER MANHOLE

WETLAND DELINEATION BY OAKLEDGE ENVIRONMENTAL

10 0 5 10 20 40

(IN FEET)
1 inch = 10 ft.

BLANCHARD BEACH WETLAND RESTORATION

FLYNN AVENUE & OAKLEDGE PARK/BURLINGTON, VERMONT

ROADSIDE SWALE PLAN

LAKESIDE ENVIRONMENTAL GROUP
P.O. BOX 4081
BURLINGTON, VT 05406
P: (802) 489-5214
WWW.LEGVT.COM

DRAWN BY:	SMS
CHECKED BY:	ATS
APPROVED BY:	ATS
DATE:	8-2-12.
SCALE:	NOTED
SHEET:	7 OF 8

WATERSHED CONSULTING ASSOCIATES, LLC
P.O. BOX 1085
WAITSFIELD, VT 05673
P: (802) 496-5130 F: (802) 496-5131
www.watershedca.com
specializing in stormwater management and erosion-sediment control