Chapin Spencer
PUBLIC WORKS DIRECTOR

Norman J. Baldwin, P.E.
CITY ENGINEER

P.O. Box 849
BURLINGTON, VT
05402
(802) 863-9094 P
(802) 863-0466 F

INVITATION FOR BIDS (IFB)
FOR SIDEWALK SAWCUTTING SERVICES

Sawcutting Sidewalk Vertical Offsets at Various Locations around Burlington

Date of Issuance: August 28, 2015

Issued by: City of Burlington Department of Public Works

Due Date for Questions: September 4, 2015 by 2 p.m. (please submit via email)
(Responses will be posted on September 9, 2015 by 5 p.m.)

Due Date for Proposals: September 11, 2015 by 1 p.m.

Issuing Point of Contact:
Laura Wheelock PE, Public Works Engineer, Burlington Public Works
645 Pine Street, Burlington, VT 05401
(802)540-0397 (w)
LWheelock@burlingtonvt.gov

INTRODUCTION AND GENERAL SCOPE OF WORK

The City of Burlington is seeking bids from qualified contractors to provide concrete sidewalk sawcutting services. Locations for the work are scattered throughout the City and the contractor may be redirected by the Engineer as needed. The contract will extend to October 30, 2015 or until available funding has been depleted, whichever occurs first.

The City is looking in general for the following tasks to be included in the proposal's scope of work:

1) Perform work according to the attached Special Provisions (Attachment D)
2) Perform work in accordance with applicable rules, regulations, codes, and ordinances of local, state and federal authorities, and in accordance with the requirements of public utility corporations having jurisdiction over the work.
3) Obtain and pay for necessary permits, licenses and certificates and give notices as required during the performance of the work.
4) Do not close or obstruct streets or sidewalks without the proper permit. Conduct operations with minimum traffic interference
5) Coordinate work with Engineer to minimize impact on residents

ADDITIONAL CITY SUPPLIED DATA/EFFORT

Sidewalk Cut Typical Detail attached in PDF form.

DEADLINE FOR RECEIPT OF PROPOSALS

All replies and proposals in response to the Invitation for Bids must be received in a sealed envelope clearly marked **Burlington Sidewalk Sawcutting** to the address and point of contact no later than **1:00 p.m**. on the above due date at which time all submitted proposals will be publicly opened and recorded. Late proposals will not be accepted. Electronic proposals are preferred as long as they are received by the point of contact by the required deadline.

ANSWERS TO QUESTIONS AND REVISIONS TO REQUEST FOR PROPOSAL

Any revisions, addendums and answers to questions received by the due date for questions will be sent to consultants who directly received this proposal via email. In addition, revisions will be posted on the City's RFP web page http://burlingtonvt.gov/RFP/. It is advised that consultants sign up for the GovDelivery notification so that they will be notified of any changes to the RFP page.

PARTNERSHIPS

Contractors may team up with other firms, local or otherwise, in order to provide whatever diversity is deemed necessary for completing the project tasks.

PROPOSAL FORMAT

Contractors are encouraged to be concise. All proposals must include, but are not limited to the following: This can be customized to project manager's preference.

1. Letter of Transmittal and two copies of the proposal if sent through the mail. If sent electronically, all documents shall be in .pdf format.
2. Proposed scope of work.
3. Completed bid form including price for each item, estimated start/end dates, and signature by authorized representative for the firm.
4. A brief description of your firm's history and experience with sawcutting concrete. If your firm intends to partner with another company, also provide pertinent information on the subcontractor.
5. A work history of up to three (3) related projects showing for each:
    a. Name, address and phone number for each client.
    b. Brief project description.
    c. Statement as to whether project was completed on time and within budget.
6. Location of the office from which the management of the project will take place.
7. Provide signed and notarized attachment E,F, and G from draft contract.

PROPOSAL EVALUATION

Proposals will be reviewed and evaluated by Department staff based on the information provided in the proposal. Additional information may be requested prior to final selection. It is anticipated that a decision will be made within 30 days of the due date. The selected contractor shall be willing to enter into an agreement with the Owner similar to the Draft Agreement Example provided in Attachment B.

CONTRACT REQUIREMENTS
Contractors are advised to review the Draft Agreement example (Attachment B), the Special Provisions (Attachment D), the Livable Wage, Outsourcing Policy, and Union Deterrence Ordinances (Attachment E,F, and G respectively) in advance of submitting a proposal. The City of Burlington reserves the right to alter or amend any or all of these provisions in the project contract.

INDEMNIFICATION
The Contractor will act in an independent capacity and not as officers or employees of the Municipality. The Consultant shall indemnify, defend and hold harmless the Municipality and its officers and employees from liability and any claims, suits, expenses, losses, judgments, and damages arising as a result of the Contractor's acts and/or omissions in the performance of this contract.

The Municipality is responsible for its own actions. The Contractor is not obligated to indemnify the Municipality or its officers, agents and employees for any liability of the Municipality, its officers, agents and employees attributable to its, or their own, negligent acts, errors or omissions.

LIMITATIONS OF LIABILITY
The City of Burlington, Vermont assumes no responsibility and liability for costs incurred by parties responding to this Invitation to Bid or responding to any further requests for interviews, additional data, etc., prior to the issuance of the contract.

REJECTION OF PROPOSALS
The City of Burlington reserves the right to reject any or all proposals, to negotiate with one or more parties, or to award the contract in the City's best interests, including proposed contractor's schedule. The City reserves the right to re-advertise for additional proposals and to extend the deadline for submission of the proposals.

OWNERSHIP OF DOCUMENTS
Proposals, plans, specifications, basis of designs, electronic data, designs and reports prepared under any agreement between the selected contractor or consultant and the city shall become the property of the City. Records shall be furnished to the City by the Contractor upon request at any time, however the Contractor or Consultant may retain copies of the original documents.

ATTACHMENT A – BID FORM

PROJECT: BURLINGTON SIDEWALK SAWCUTTING

Contractor:_____ Address:_____

Contact:_____ Telephone/Email:_____

Proposed Start Date:_____ Estimated End Date:_____

BID FORM

Bidder agrees to perform all the Work described in the Contract Documents for the following schedule of prices. Unqualified bids will not be accepted.

Height of the cut will be measured to the nearest ½ inch. Length of the cut will be measured to the nearest ½ foot.

Height of the cut on slabs without a consistent offset will be calculated by taking the average of the offset height at each end of the cut.

For example: A slab that had a 0 inch offset at the start and a 2 inch offset at the end would be considered a 1.0 inch Saw Cut. Refer to attached example drawing.

Work will be awarded based on the unit price up to a maximum limiting amount of $15,000.

Item #	Item Description	Unit	Quantity	Unit Price
840.10	0.5 inch Saw Cut Concrete	LF	5	$ _____
Unit Price in Words:				
840.11	0.75 inch Saw Cut Concrete	LF	5	$ _____
Unit Price in Words:				
840.12	1.0 inch Saw Cut Concrete	LF	5	$ _____
Unit Price in Words:				
840.13	1.25 inch Saw Cut Concrete	LF	5	$ _____
Unit Price in Words:				
840.14	1.5 inch Saw Cut Concrete	LF	5	$ _____
Unit Price in Words:				
840.15	1.75 inch Saw Cut Concrete	LF	5	$ _____
Unit Price in Words:				
840.16	2.0 inch Saw Cut Concrete	LF	5	$ _____
Unit Price in Words:				

TOTAL BID: $_____

BY SIGNING THIS BID FORM, THE CONTRACTOR AGREES TO ABIDE BY ALL SPECIFICATIONS AND CONDITIONS IN THE CONTRACT DOCUMENTS.

_____
SIGNATURE

_____
NAME

_____
TITLE

WITH THIS BID, THE CONTRACTOR MUST INCLUDE SIGNED CERTIFICATES OF COMPLIANCE WITH LIVABLE WAGE, OUTSOURCING AND UNION DETERRENCE. THESE FORMS ARE INCLUDED IN ATTACHMENT E.

ATTACHMENT B – DRAFT AGREEMENT

AGREEMENT FOR SIDEWALK SAWCUTTING SERVICES FOR
Sawcutting Sidewalk Vertical Offsets at Various Locations, Burlington, VT

1. Parties: This is an Agreement for services between the City of Burlington, (hereinafter called "CITY") and _____, A Vermont Corporation registered to do business in the State of Vermont with its principal place of business at _____ (hereinafter called "Contractor").

2. Subject Matter: The subject matter of this Agreement is Sidewalk Sawcutting. Detailed services are described in the Special Provisions and Contractor's proposal.

3. Maximum Amount: In consideration of the services to be performed by Contractor, City agrees to pay Contractor, if all the Task options are exercised, a sum not to exceed _____.

4. Agreement Term: The period of Contractor's work shall begin upon this _____ day of _____, 2015 and end on _____, 2015.

5. Source of Funds: *Street Capital Fund*

6. Attachments: The Contractor agrees to perform the work in compliance with the following attachments, all of which are incorporated herein and made part of this Agreement:
   Attachment A – Invitation for Bids, Proposal Scope of Work, and Expected Deliverables
   Attachment B – Cost Proposal and Payment Procedures
   Attachment C – Burlington Standard Contract Provisions
   Attachment D – Special Provisions
   Attachment E – City's Livable Wage Ordinance, form
   Attachment F – City's Outsourcing Ordinance, form
   Attachment G – City's Union Deterrence, form

7. Entire Agreement and Amendments:
   The parties acknowledge that this Agreement is the entire agreement between the parties and that there are no representations, inducements, arrangements, promises, or agreements outstanding between them, either oral or in writing, other than those. No provision of this Agreement shall be changed or modified except by a written instrument executed by both parties hereto.

8. Binding Nature:

This Agreement shall be binding upon and inure to the benefit of the parties, their respective successors, and permitted assigns.

IN WITNESS WHEREOF, the parties hereto have caused this Agreement to be executed as of the day and year first above written.

BURLINGTON	CONTRACTOR
Signature: _____	Signature: _____
Name: Chapin Spencer	Name:
Title: Director of Public Works	Title:
Date: _____, 2015	Date: _____, 2015

Approved by City Attorney: _____

Date: _____, 2015

ATTACHMENT C - BURLINGTON STANDARD CONTRACT CONDITIONS

Wherever used, abbreviations may be used in place of a word or phrase and definitions may be used to interpret statements for the meaning of words phrases or expressions. The intent and meaning for abbreviations and definitions shall be interpreted as herein set forth:

AASHTO	American Association of State Highway and Transportation Officials
AGC	Associated General Contractors of America
ANR	Agency of Natural Resources
ANSI	American National Standards Institute
ASCE	American Society of Civil Engineers
AWWA	American Water Works Association
CADD	Computer Aided Drafting and Design
CES	Contractor Engineering Services
CFR	Code of Federal Regulations
DOT	United States Department of Transportation
EEO	Equal Employment Opportunity
EIS	Environmental Impact Statement
EDM	Electronic Data Media
FHWA	Federal Highway Administration, U.S. Department of Transportation
FSS	Federal Specifications and Standards
FTA	Federal Transit Administration
IBC	International Building Code
IPC	International Plumbing Code
NEC	National Electrical Code
SIR	Self Insured Retention
USC	United States Code
USEPA	United States Environmental Protection Agency
VAOT	Vermont Agency of Transportation
VOSHA	Vermont Occupational Safety and Health Act
VSA	Vermont Statutes Annotated
WEF	Water Environment Association

1. **INDEMNIFICATION:**
   The CONTRACTOR will act in an independent capacity and not as officers or employees of the CITY. The CONTRACTOR shall indemnify, defend and hold harmless the CITY and its officers and employees from liability and any claims, suits, expenses, losses, judgments, and damages arising as a result of the CONTRACTOR's negligent acts and/or omissions in the performance of this contract.

2. **RELATIONSHIP:**
The parties agree that the CONTRACTOR is an independent CONTRACTOR. To that end, the CONTRACTOR shall determine the method, details, and means of performing the work, but will comply with all legal requirements in doing so. City shall provide the CONTRACTOR with no specific instructions or training in how to provide the required services, except to the extent required by law or regulation. The CONTRACTOR shall provide its own tools, materials or equipment. The parties agree that neither the CONTRACTOR nor its Principal is an employee of City or any of its departments, agencies, or related entities. The parties also agree that neither the CONTRACTOR nor its Principal is entitled to any employee benefits from City. CONTRACTOR understands and agrees that it and its Principal have no right to claim any benefits under the Burlington Employee Retirement System, City's worker's compensation benefits, health insurance, dental insurance, life insurance or any other employee benefit plan offered by City. The CONTRACTOR agrees to execute any certifications or other documents and provide any certificates of insurance required by City and understands that this contract is conditioned on its doing so, if requested.

The CONTRACTOR understands and agrees that it is responsible for the payment of all taxes on the above sums and that City will not withhold or pay for Social Security, Medicare, or other taxes or benefits or be responsible for any unemployment benefits.

3. **INSURANCE:**
Prior to beginning any work the CONTRACTOR shall obtain the following insurance coverage from an insurance company registered and licensed to do business in the State of Vermont and having an A.M. Best insurance rating of at least A-, financial size category VII or greater (www.ambest.com). The certificate of insurance coverage shall be documented on forms acceptable to the CITY. Compliance with minimum limits and coverage, evidenced by a certificate of insurance showing policies and carriers that are acceptable to the CITY, must be received prior to the effective date of the Agreement. The insurance policies shall provide that insurance coverage cannot be canceled or revised without thirty (30) days prior notice to the CITY. In the event that this Contract extends to greater than one year, evidence of continuing coverage must be submitted to the CITY on an annual basis. Certified copies of any insurance policies may be required. Each policy (with the exception of professional liability and workers compensation) shall name the CITY as an additional insured for the possible liabilities resulting from the CONTRACTOR's actions or omissions. It is agreed that the liability insurance furnished by the CONTRACTOR is primary and non-contributory for all the additional insured.

The CONTRACTOR is responsible to verify and confirm in writing to the CITY that:

(a) All SUB-CONTRACTORs, agents or workers meet the minimum coverage and limits plus maintain current certificates of coverage for all SUB-CONTRACTORs, agents or workers. SUB-CONTRACTORs must comply with the same insurance

requirements as the CONTRACTOR.

(b) All coverage shall include adequate protection for activities involving hazardous materials.

(c) All work activities related to the agreement shall meet minimum coverage and limits.

No warranty is made that the coverage and limits listed herein are adequate to cover and protect the interests of the CONTRACTOR for the CONTRACTOR's operations. These are solely minimums that have been developed and must be met to protect the interests of the CITY.

GENERAL LIABILITY AND PROPERTY DAMAGE:

With respect to all operations performed by the CONTRACTOR, SUB-CONTRACTORs, agents or workers, it is the CONTRACTOR's responsibility to insure that general liability insurance coverage, on an occurrence form, provides all major divisions of coverage including, but not limited to and with limits not less than:

1. Premises Operations
2. Independent CONTRACTORS' Protective
3. Products and Completed Operations
4. Personal Injury Liability
5. Contractual Liability
6. Broad Form Property Damage
7. Medical Expenses
8. Collapse, Underground and Explosion Hazards

1. General Aggregate	$2,000,000
2. Products-Completed/Operations	$2,000,000
3. Personal & Advertising Injury	$1,000,000
4. Each	$1,000,000
5. Fire Damage (Any one fire)	$ 250,000
6. Med. Expense (Any one	$ 5,000

WORKERS' COMPENSATION: With respect to all operations performed, the CONTRACTOR shall carry workers compensation insurance in accordance with the laws of the State of Vermont and ensure that all SUB-CONTRACTORs and SUBCONTRACTORs carry the same workers' compensation insurance for all work performed by them under this contract. Minimum limits for Employer's Liability:

(a) Bodily Injury by Accident: $500,000 each accident
(b) Bodily Injury by Disease: $500,000 policy limit, $500,000 each employee

PROFESSIONAL LIABILITY INSURANCE:

(a) General. N/A

(b) Deductibles. The CONSULTANT is responsible for any and all deductibles.

(c) Coverage. N/A

AUTOMOBILE LIABILITY: The CONTRACTOR shall carry commercial automobile liability insurance covering all motor vehicles, including owned, non-owned and hired, used in connection with the agreement. Each policy shall provide coverage with a limit not less than: $1,000,000 - Combined Single Limit for each occurrence.

UMBRELLA LIABILITY:
$1,000,000 Each Event Limit
$1,000,000 General Aggregate Limit

COMPLIANCE WITH LAWS

4. **GENERAL COMPLIANCE WITH LAWS**
The CONTRACTOR shall comply with all applicable Federal, State and local laws, including but not limited to the Burlington Livable Wage Ordinance, the Non-Outsourcing Ordinance and the Union-Deterrence Ordinance and shall provide the required certifications attesting to compliance with these ordinances (see attached ordinances and certifications).

Provisions of the Agreement shall be interpreted and implemented in a manner consistent with each other and using procedures that will achieve the intent of both parties. If, for any reason, a provision in the Agreement is unenforceable or invalid, that provision shall be deemed severed from the Agreement, and the remaining provisions shall be carried out with the same force and effect as if the severed provisions had never been a part of the Agreement.

5. **CIVIL RIGHTS and EQUAL EMPLOYMENT OPPORTUNITY**
During performance of the Agreement, the CONTRACTOR will not discriminate against any employee or applicant for employment because of race, age, color, religion, sex, sexual orientation, gender identify, national origin, physical disability or veteran status.

The CONTRACTOR shall comply with the applicable provisions of Title VI of the Civil Rights Act of 1964 as amended, Executive Order 11246 as amended by Executive Order 11375 and as supplemented by the Department of Labor regulations (41 CFR Part 60). The CONTRACTOR shall also comply with the rules, regulations and relevant orders of the Secretary of Labor, Nondiscrimination regulations 49 CFR § 21 through Appendix C, and Regulations under 23 CFR§710.405 (b). Accordingly, all subcontracts shall include reference to the above. The CONTRACTOR shall comply with all the requirements of Title 21, VSA, Chapter 5, Subchapter 6 and 7, relating to fair employment practices to the

extent applicable. A similar provision shall be included in any and all subcontracts.

6. **CHILD SUPPORT PAYMENTS**
   By signing the Contract the CONTRACTOR certifies, as of the date of signing the Agreement, that they are (a) not under an obligation to pay child support; or (b) is under such an obligation and is in good standing with respect to that obligation; or (c) has agreed to a payment plan with the Vermont Office of Child Support Services and is in full compliance with that plan. If the CONTRACTOR is a sole proprietorship, the CONTRACTOR's statement applies only to the proprietor. If the CONTRACTOR is a partnership, the CONTRACTOR's statement applies to all general partners with a permanent residence in Vermont. If the CONTRACTOR is a corporation, this provision does not apply.

7. **TAX REQUIREMENTS**: By signing the Agreement, the CONTRACTOR certifies, as required by law under 32 VSA, Section 3113, that under the pains and penalties of perjury, he/she is in good standing with respect to payment, or in full compliance with a plan to pay, any and all taxes due the State of Vermont as of the date of signature on the Agreement

CONTRACTUAL AGREEMENTS

8. **REGISTRATION:** The CONTRACTOR agrees to be registered with the Vermont Secretary of State's office as a business entity doing business in the State of Vermont at all times this contract is effective. This registration must be complete prior to contract execution.

9. **PERSONNEL REQUIREMENTS AND CONDITIONS**: A CONTRACTOR shall employ only qualified personnel, for responsible authority to supervise the work. The CITY shall have the right to approve or disapprove key personnel assigned to administer activities related to the Agreement.

   Except with the approval of the CITY, during the life of the Agreement, the CONTRACTOR shall not employ:

   (a) Personnel on the payroll of the CITY who are directly involved with the awarding, administration, monitoring, or performance of the Agreement or any project(s) that are the subjects of the Agreement.

   (b) Any person so involved within one (1) year of termination of employment with the CITY.

   The CONTRACTOR warrants that no company or person has been employed or retained, other than a bonafide employee working solely for the CONTRACTOR, to solicit or secure this Agreement, and that no company or person has been paid or has an agreement with the CONTRACTOR to be paid, other than a bonafide employee working solely for the CONTRACTOR, any fee, commission,

percentage, brokerage fee, gift, or any other consideration, contingent upon or resulting from the award or making of the Agreement. For breach or violation of this warranty, the CITY shall have the right to annul the Agreement, without liability to the CITY, and to regain all costs incurred by the CITY in the performance of the Agreement.

The CITY reserves the right to require removal of any person employed by a CONTRACTOR, from work related to the Agreement, for misconduct, incompetence, or negligence, in the opinion of the CITY in the due and proper performance of its duties, or who neglects or refuses to comply with the requirements of the Agreement.

10. **TRANSFERS, SUBLETTING, ETC**: A CONTRACTOR shall not assign, sublet, or transfer any interest in the work, covered by an Agreement, without prior written consent of the CITY and further, if any SUB-CONTRACTOR participates in any work involving additional services, the estimated extent and cost of the contemplated work must receive prior written consent of the CITY. The approval or consent to assign or sublet any portion of the work, shall in no way relieve the CONTRACTOR of responsibility for the performance of that portion of the work so transferred. The form of the SUB-CONTRACTOR's agreement shall be as developed by the CONTRACTOR and approved by the CITY. The CONTRACTOR shall ensure that insurance coverage exists for any operations to be performed by any SUB-CONTRACTOR as specified in the insurance requirements section of this agreement.

    The services of the CONTRACTOR, to be performed under the Agreement, are personal and shall not be transferred without written authorization of the CITY. Any authorized sub agreements shall contain all of the same provisions for and attached to the original agreement with the CITY.

11. **CONTINUING OBLIGATIONS**: The CONTRACTOR agrees that if because of death or other occurrences, it becomes impossible to effectively perform its services in compliance with the Agreement, neither the CONTRACTOR nor its surviving members shall be relieved of their obligations to complete the Agreement. However, the CITY may terminate the Agreement if it considers a death or incapacity of any members to be a loss of such magnitude that it would affect the firm's ability to satisfactorily execute the Agreement.

12. **OWNERSHIP OF THE WORK**: The CONTRACTOR agrees that the ownership of all studies, data sheets, survey notes, subsoil information, drawings, tracings, estimates, specifications, proposals, diagrams, calculations, EDM and other material prepared or collected by the CONTRACTORs, hereafter referred to as "instruments of professional service", shall become the property of the CITY as they are prepared and/or developed during execution of the Agreement. The CONTRACTOR agrees to allow access to all "instruments of professional service" at any time. The CONTRACTOR shall not copyright any material originating under the Agreement without prior written approval of the CITY. No publications or publicity of the work, in part or in total, shall be made without the agreement

of the CITY, except that CONTRACTORs may in general terms use previously developed instruments of professional service to describe its abilities for a project in promotional materials.

13. **PROPRIETARY RIGHTS**: The parties under the Agreement hereby mutually agree that, if patentable discoveries or inventions should result from work performed under the Agreement, all rights accruing from such discoveries or inventions shall be the sole property of the CONTRACTOR. The CONTRACTOR, however, agrees to and does hereby grant to the CITY, the State of Vermont and the United States Government an irrevocable, nonexclusive, non-transferable, and royalty-free license to practice each invention in the manufacture, use, and disposition, according to law, of any article or material or use of method that may be developed, as a part of the work under the Agreement.

14. **PUBLIC RECORDS**
The CONTRACTOR understands that any and all records related to and acquired by the City, whether electronic, paper, or otherwise recorded, are subject to the Vermont Public Records Act and that the determination of how those records must be handled is solely within the purview of City. The CONTRACTOR shall identify all records that it considers to be trade secrets as that term is defined by subsection 317(c)(9) of the Vermont Public Records Act.

15. **RECORDS RETENTION**
The CONTRACTOR agrees to retain, in its files, and to produce to City within the time periods requested, all books, documents, EDM, accounting records, and other evidence related to City, at any time during this Agreement and for a period of at least three (3) years after its termination. The CONTRACTOR further agrees that the CITY shall have access to all the above information for the purpose of reviewing and audit during the Agreement period and anytime within the aforementioned retention period. Copies of all of the above referenced information shall be provided to the CITY if requested. CONTRACTOR, SUB-CONTRACTORs, or any representatives performing work related to the Agreement, are responsible to insure that all data and information created or stored on EDM is secure and can be duplicated if the EDM mechanism is subjected to power outage or damage.

16. **APPEARANCES**:
(a) Hearings and Conferences. The CONTRACTOR shall provide professional services required by the CITY and necessary for furtherance of any work covered under the Agreement. Professional services shall include appropriate representation at design conferences, public gatherings and hearings, and appearances before any legislative body, commission, board, or court, to justify, explain and defend its contractual services covered under the Agreement.

The CONTRACTOR shall perform any liaison that the CITY deems necessary for the furtherance of the work and participate in conferences with the CITY, at any reasonable time, concerning interpretation and evaluation of all aspects

covered under the Agreement.

The CONTRACTOR further agrees to participate in meetings with the CITY and any other interested or affected participant, for the purpose of review or resolution of any conflicts pertaining to the Agreement.

The CONTRACTOR shall be equitably paid for such services and for any reasonable expenses incurred in relation thereto in accordance with the Contract document.

(b) Appearance as Witness. If and when required by the CITY, a CONTRACTOR, or an appropriate representative, shall prepare and appear for any litigation concerning any relevant project or related Agreement, on behalf of the CITY. The CONTRACTOR shall be equitably paid for such services and for any reasonable expenses incurred in relation thereto, in accordance with the Contract document.

17. **CHANGES AND AMENDMENTS:** No changes or amendments of the Agreement shall be effective unless documented in writing and signed by authorized representatives of the CITY and the CONTRACTOR.

18. **APPENDICES**: The CITY may attach, to these specifications, appendices containing various forms and typical sample sheets for guidance and assistance to the CONTRACTOR in the performance of the work. It is understood, however, that such forms and samples may be modified, altered, and augmented from time to time by the CITY as occasions may require. It is the responsibility of the CONTRACTOR to ensure that they have the latest versions applicable to the Agreement.

19. **EXTENSION OF TIME**: The CONTRACTOR agrees to prosecute the work continuously and diligently and no charges or claims for damages shall be made by the CONTRACTOR for delays or hindrances, from any cause whatsoever, during the progress of any portion of services specified in the Agreement. Such delays or hindrances, if any, may be compensated for by an extension of time for such reasonable period as the CITY may decide. Time extensions shall be granted by amendment, only for excusable delays, such as delays beyond the control of the CONTRACTOR and without the fault or negligence of the CONTRACTOR.

20. **SETTLEMENTS OF MISUNDERSTANDINGS**: In order to prevent misunderstandings and litigation, it is mutually agreed by all parties that the City Council shall act as referee on all questions arising under the terms of an Agreement and that the decision of this governing body in such cases shall be binding upon both parties.

    In agreements subjecting costs to final audit, an administrative review regarding the audit will be sent to the CONTRACTOR. Any dispute arising from an administrative decision shall be appealed in writing within thirty (30) days of receipt.

21. **FAILURE TO COMPLY WITH TIME SCHEDULE**: It is mutually understood and agreed to, that neither party hereto shall be held responsible for delay in performing the work encompassed herein, when such delay is due to unforeseeable causes such as acts of God, or a public enemy, fire, strikes, floods, or legal acts of public authorities. In the event that any such causes for delay are of such magnitude as to prevent the complete performance of the Agreement within two (2) years of the originally scheduled completion date, either party may by written notice request to amend or terminate the Agreement.

22. **CITY'S OPTION TO TERMINATE**: The Agreement may be terminated in accordance with the following provisions, which are not exclusive:

    (a) Breach of Contract. Administrative remedies - the CITY reserves the right to terminate a Contract for breach of Contract agreements. Termination for breach of Contract will be without further compensation to the CONTRACTOR.

    (b) Termination for Cause. The CITY reserves the right, upon written notice to the CONTRACTOR, to terminate the Agreement, as of a date to be specified by the CITY, if the CONTRACTOR fails to complete the designated work to the satisfaction of the CITY, within the time schedule agreed upon. The CONTRACTOR shall be compensated on the basis of the work performed and accepted by the CITY at the date of final acceptance of the Agreement.

    (c) Termination for Convenience. In addition to its rights and options to terminate an Agreement as provided herein, the CITY may, at any time prior to completion of services specified under an Agreement, terminate the Agreement by submitting written notice to a CONTRACTOR, within not less than fifteen (15) days prior to the effective date, via certified or registered mail, of its intention to do so. If the termination is for the CITY's convenience, payment to the CONTRACTOR will be made promptly for the amount of any fees earned to the date of the notice of termination, less any payments previously made. However, if a notice of termination is given to a CONTRACTOR prior to completion of twenty (20) percent of the estimated services, as set forth in the approved Work Schedule and Progress Report, the CONTRACTOR will be reimbursed for that portion of any reasonable and necessary expenses incurred to date of the notice of termination, that are in excess of the amount earned under its approved fee to the date of said termination. Such requests for reimbursement shall be supported with factual data and shall be subject to the CITY's approval. The CONTRACTOR shall make no claim for additional compensation against the CITY by reason of such termination.

23. **ACKNOWLEDGEMENTS**
    Acknowledgment of the City of Burlington's support must be included in any and all publications, renderings and project publicity, including audio/visual materials

developed under this contract.

OPERATIONAL STANDARDS

24. **RESPONSIBILITY FOR SUPERVISION**: The CONTRACTOR shall assume primary responsibility for general supervision of CONTRACTOR employees and his/her or their SUBCONTRACTORS for all work performed under the Contract and shall be solely responsible for all procedures, methods of analysis, interpretation, conclusions and contents of work performed under the Agreement.

25. **INDEPENDENCE:** The CONTRACTOR shall act in an independent capacity and not as officers or employees of the CITY.

26. **UTILITIES:** Whenever a facility or component of a private, public, or cooperatively-owned utility will be affected by any proposed construction, the CONTRACTOR will counsel with the CITY, plus achieve any necessary contacts and discussions with the affected owners, regarding any requirement necessary for revisions of facilities or existing installations, both above and below ground. Any such installations must be completely and accurately exhibited on any detail sheets or plans. The CONTRACTOR shall inform the CITY, in writing, of any such contacts and the results thereof.

27. **PUBLIC RELATIONS**: Whenever it is necessary to perform work in the field, particularly with respect to reconnaissance, the CONTRACTOR will endeavor to maintain good relations with the public and any affected property owners. Personnel employed by or representing the CONTRACTOR shall conduct themselves with propriety. The CONTRACTOR agrees to inform property owners and/or tenants, in a timely manner, if there is need for entering upon private property as an agent of the CITY, in accordance with VSA Title 19 § 35 and §503, in order to accomplish the work under the Agreement. The CONTRACTOR agrees that any work will be done with minimum damage to the land and disturbance to the owner. Upon request of the CONTRACTOR, the CITY shall furnish a letter of introduction to property owners soliciting their cooperation and explaining that the CONTRACTOR is acting as an agent of the CITY.

28. **INSPECTION OF WORK:**
    The CITY shall, at all times, have access to the CONTRACTOR's work for the purposes of inspection, accounting, and auditing, and the CONTRACTOR shall provide whatever access is considered necessary to accomplish such inspections. At any time, the CONTRACTOR shall permit the CITY or representative for the CITY the opportunity to inspect any plans, drawings, estimates, specifications, or other materials prepared or undertaken by the CONTRACTOR pursuant to execution of the Agreement.

    Conferences, visits to a site, or an inspection of the work, may be held at the request of any involved party or by representatives of the CITY.

29. **RETURN OF MATERIALS.** CONTRACTOR agrees that at the termination of this

Agreement, it shall return to City all materials provided to it during its engagement on behalf of City.

PROJECT DEVELOPMENT AND STANDARDS

30. **PLANS RECORDS AND AVAILABLE DATA:**
The CITY agrees to make available, at no charge, for the CONTRACTOR's use all available data related to the Agreement including any preliminary plans, maps, drawings, photographs, reports, traffic data, calculations, EDM, valuable papers, topographic survey, utility location plats, or any other pertinent public records.

31. **DESIGN STANDARDS:** Unless otherwise specifically provided for in the Agreement, or directed in writing, CONTRACTOR services, studies or designs, that include or make reference to plans, specifications, special provisions, computations, estimates, or other data necessary for construction of a designed facility, shall be in conformance with applicable portions of the following specifications, manuals, codes or regulations, including supplements to or revisions thereof, adopted and in effect prior to award of the Agreement:

(a) VTRANS'S latest edition of the Standard Specifications for Construction.
(b) VTRANS'S Bridge Design Manual.
(c) All applicable AASHTO roadway, traffic, bridge, bicycle and pedestrian policies, guides and manuals.
(d) VTRANS'S Manual on Survey.
(e) VTRANS'S Right-of-Way Manual.
(f) The Highway Capacity Manual - Special Report 209.
(g) The ANSI/AASHTO/AWS D-1.5, Bridge Welding code.
(h) The MUTCD and Vermont Supplement requirements.
(i) The Standard Specifications for Structural Supports for Highway Signs, Luminaries and Traffic Signals
(j) Other CITY directives and guidelines current at the time of the Agreement and as may be issued by the CITY during the progress of the design.

In case of any conflict with the guidelines referenced, the CONTRACTOR is responsible to identify and follow any course of direction provided by the CITY.

32. **REVIEWS AND ACCEPTANCES**: All preliminary and detailed designs, plans, specifications, estimates or other documents prepared by the CONTRACTOR, shall be subject to review and endorsement by the CITY.

Approval for any inspections or sequences of progress of work shall be documented by letters, memoranda or other appropriate written means.

A frequency for formal reviews shall be set forth in the Agreement. Informal reviews, conducted by the CITY will be performed as deemed necessary. The CONTRACTOR shall respond to all official comments regardless of their source. The CONTRACTOR shall supply the CITY with written copies of all correspondence

relating to formal and informal reviews.

No acceptance shall relieve a CONTRACTOR of their professional obligation to correct any defects or errors in their work at their own expense.

33. **BINDING NATURE AND JURISDICTION**
This agreement shall be binding upon and shall inure to the benefit of the parties hereto, their successors or heirs and representatives, and assigns. This agreement shall be governed by Vermont law, and the CONTRACTOR expressly agrees to submit to the jurisdiction of the courts of the State of Vermont.

PAYMENT FOR SERVICES RENDERED:

34. **PAYMENT PROCEDURES**: The CITY shall pay, or cause to be paid to the CONTRACTOR or the CONTRACTOR's legal representative, payments in accordance with the Agreement. When applicable, for the type of payment specified in the Agreement, the progress report shall summarize actual costs and any earned portion of fixed fee.

All invoices and correspondence shall indicate the applicable project name, project number and the Agreement number. When relevant, the invoice shall further be broken down in detail between projects.

When applicable, for the type of payment specified in the Agreement, expenses for meals and travel shall be limited to the current approved in-state rates, as determined by the State of Vermont's labor contract, and need not be receipted. All other expenses are subject to approval by the CITY and must be accompanied with documentation to substantiate their charges.

No approval given or payment made under an Agreement, shall be conclusive evidence of the performance of said Agreement, either wholly or in part thereof, and no payment shall be construed to be acceptance of defective work or improper materials.

The CITY agrees to pay the CONTRACTOR and the CONTRACTOR agrees to accept, as full compensation, for performance of all services rendered and expenses encompassed in conformance therewith, the type of fee specified in the Agreement.

Upon completion of all services covered under the Agreement and payment of the agreed upon fee, the Agreement with its mutual obligations shall be terminated.

35. **PAYMENT FOR ADDITIONS OR DELETIONS**: The CITY may, upon written notice, and without invalidating the Agreement, require any changes to, additions to, or deletions from, the originally contemplated extent of the work, prior to completion of the Agreement by means of an amendment to the original Agreement. Any adjustments of this nature shall be executed under the appropriate fee established in the Agreement, based on the adjusted quantity of work, except that any claim for extension of time caused thereby shall be adjusted at the time of ordering such

addition or deletion.

36. **PAYMENT FOR EXTRA WORK, ADDITIONAL SERVICES OR CHANGES**: The CITY may, upon written notice, and without invalidating the Agreement, require changes resulting from revision or abandonment of work already performed by the CONTRACTOR or changes in the scope of work.

    The value of such changes, to the extent not reflected in other payments to the CONTRACTOR, shall be incorporated in an amendment and be determined by mutual agreement, by one or more of the following:

    (a) Fixed Price. By a price that is not subject to any adjustment on the basis of the CONTRACTOR's expenses experienced in performing the work. The CONTRACTOR is fully responsible for all costs and resulting profit or loss.

    (b) Rate Schedule. By unit prices designated in the Agreement, or by unit prices covered under any subsequent Agreements.

    (c) Actual Cost. By amounts determined on the basis of actual costs incurred, as distinguished from forecasted expenditures.

    No changes, for which additional fee payment is claimed, shall be made unless pursuant to a written order from the CITY, and no claim shall be valid unless so ordered.

    The CONTRACTOR agrees to maintain complete and accurate records, in a form satisfactory to the CITY for all time devoted directly to same by CONTRACTOR employees. The CITY reserves the right to audit the records of the CONTRACTOR related to any extra work or additional services. Any such services rendered shall be subject, in all other respects, to the terms of the Agreement. When changes are so ordered, no additional work shall be performed by the CONTRACTOR until an Agreement amendment has been fully executed, unless written notice to proceed is issued by the CITY. Any claim for extension of time, which may be necessitated as a result of extra work or additional services and changes, shall be given consideration and evaluated insofar as it directly relates to the change.

Attachment D

SPECIAL PROVISION SECTION 840 – SIDEWALK OFFSET CUTTING

840.01 DESCRIPTION. The work in this section shall consist of the offset cutting of concrete sidewalks.

840.02 SCOPE OF WORK. The following are types of offsets to be removed.

All offsets within the areas specified in the contract document measuring ¼" or greater in vertical offset. Concrete curb and driveway apron adjustment specified within the contract document.

840.03 SAWCUTTING CONRETE SIDEWALKS. All offsets marked for removal shall be removed in accordance with the Americans with Disabilities Act (ADA) sections 303.2 and 405.2. Each offset shall tapered at no greater than a 1:8 slope and appear smooth and uniform. The final surface shall have a coefficient of friction no less than 0.5.

All cuts shall be taken to both edges of the sidewalk and to the zero point of differential settlement to completely remove the offset.

Debris from cutting shall be cleaned from the surface of the sidewalk as well as surrounding handrails, driveways or other adjacent surfaces immediately following offset cutting before moving on to the next location. Debris shall be properly disposed of at an approved facility for recycling construction debris

840.04 DUST CONTAINMENT. Precautions will be taken by the contractor to limit the dust arising from the sawcutting. Dust abatement vacuum hoods with a HEPA type filter shall be used on handheld concrete saws. When necessary the contractor shall use power sweepers and water to contain dust in the construction area.

Settled dust from cutting shall be cleaned from the surface of the sidewalk as well as surrounding handrails, driveways or other objects immediately following offset removal before moving on to the next location.

840.05 PROTECTION OF PROPERTY. When sawcutting, the contractor will take care not to damage, scar or impair the health of any tree on public or private property.

When saw cutting, the contractor will take care not to damage, or scar surrounding objects including, but not limited to, rails, driveways, paths, fences, sprinkler heads, etc.

Any areas disturbed in the course of sawcutting will be restored to the condition it was in before work began. Included but not limited to: replacement of topsoil, seeding, mulching, etc.

840.06 TRAFFIC CONTROL. Vehicle and Pedestrian traffic control required to safely complete work shall be considered incidental to the work being performed.

840.07 OPERATION LIMITATIONS. Grinding of sidewalks is prohibited.

All saw cuts shall be completed by the end of the same day in which they began. Saw cuts through driveways shall be done in such a manner as to minimize interruption to normal business operations.

The engineer may direct saw cuts to be done at locations other than construction joints and those will be paid for at the unit price bid.

840.08 METHOD OF MEASUREMENT & PAYMENT. All work, tools, materials, and labor associated with the individual pay items shall be considered incidental to the pay item.

Horizontal Saw Cut Concrete Sidewalk shall be paid by linear feet.
Saw Cut Driveway Apron Adjustment shall be paid by linear feet.

Payment will be made under:

Pay Item	Description	Pay Unit
840.10	0.25 inch Saw Cut Concrete Sidewalk	LF
840.11	0.5 inch Saw Cut Concrete Sidewalk	LF
840.12	0.75 inch Saw Cut Concrete Sidewalk	LF
840.13	1.25 inch Saw Cut Concrete Sidewalk	LF
840.14	1.5 inch Saw Cut Concrete Sidewalk	LF
840.15	1.75 inch Saw Cut Concrete Sidewalk	LF
840.16	2 inch Saw Cut Concrete Sidewalk	LF

Depth of cut to be taken as the average depth of cut.

Contractor shall keep record of Location of cut, height of both ends of the cut, length of the cut, and average height of sawcut.

END OF SECTION 840

BURLINGTON ORDINANCE REQUIREMENTS

CITY OF BURLINGTON

ORDINANCE 10.

revised version

Sponsor: Councilors Mason, Bushor, Paul: Ordinance Com.

Public Hearing Dates

First reading: 09/23/13

Referred to: Ordinance Committee

Rules suspended and placed in all stages of passage:

Second reading: 10/21/13

Action: adopted

Date: 10/21/13

Signed by Mayor: 10/30/13

Published 11/06/13

Effective: ~~11/27/13~~

In the Year Two Thousand Thirteen

An Ordinance in Relation to

OFFENSES AND MISCELLANEOUS PROVISIONS--
ARTICLE VI - Livable Wages

It is hereby Ordained by the City Council of the City of Burlington, as follows:

That Chapter 21, Offenses and Miscellaneous Provisions, of the Code of Ordinances of the City of Burlington be and hereby is amended by amending Sections21-80 through 21-87 thereof and adding new Sections 21-88 and 21-89 thereto to read as follows:

Sec. 21-80. - Findings and purpose.

In enacting this article, the city council states the following findings and purposes:

(a) Income from full-time work should be sufficient to meet an individual's basic needs;

(b) The City of Burlington is committed to ensuring that its ~~year-round~~ employees ~~(full and part time)~~ have an opportunity for a decent quality of life and are compensated~~, and~~ such that they are not dependent on public assistance, to meet their basic needs;

(c) The ~~city~~ City of Burlington is committed, through its contracts with vendors and provision of financial assistance, to encourage the private sector to pay its employees a livable wage and contribute to employee health care benefits;

(d) The creation of jobs that pay livable wages promotes the prosperity and general welfare of the ~~city~~ City of Burlington and its residents, increases consumer spending with local businesses, improves the economic welfare and security of affected employees and reduces expenditures for public assistance;

(e) It is the intention of the city council in passing this article to provide a minimum level of compensation for ~~city~~ employees of the City of Burlington and employees of entities that enter into service contracts or receive financial assistance from the City of Burlington.

Sec. 21-81. - Definitions.

As used in this article, the following terms shall be defined as follows:

a) Contractor or vendor is a person or entity that has a service contract with the City of ~~Burlington primarily for the furnishing of services (as opposed to the purchasing of goods) where~~Burlington where the total amount of the service contract or service contracts exceeds fifteen thousand dollars ($15,000.00) for any twelve-month period, including any subcontractors of such contractor or vendor. ~~A person or entity that has a contract with the City of Burlington for the use of property under the jurisdiction of the board of airport commissioners, or any person or entity that has a sublease or other agreement to perform services on such property, shall also be considered a contractor under this article.~~

(b) Grantee is a person or entity that is the recipient of financial assistance from the City of Burlington in the form of grants ~~administered by the city~~, including any contractors or sub~~contractor~~grantees of the grantee, that exceeds fifteen thousand dollars ($15,000.00) for any twelve-month period.

(c) Covered employer means the City of Burlington ~~(except that the Burlington School Department shall not be considered a covered employer)~~, a contractor or vendor or a grantee as defined above. The primary contractor, vendor, or grantee shall be responsible for the compliance of each of its subcontractors (or of each subgrantee) that is a covered employer.

(d) Covered employee means an "employee" as defined below, who is employed by a "covered employer," subject to the following:

(1) An employee who is employed by a contractor or vendor is a "covered employee" during the period of time he or she expends on furnishing services under a service contract with the City of Burlington~~funded by the city~~, notwithstanding that the employee may be a temporary or seasonal employee;

(2) An employee who is employed by a grantee who expends at least half of his or her time on activities funded by the ~~city~~ City of Burlington is a "covered employee."

(e) Designated accountability monitor shall mean a nonprofit corporation which has established and maintains valid nonprofit status under Section 501(c)(3) of the United States Internal Revenue Code of 1986, as amended, and that is independent of the parties it is monitoring.

(ef) Employee means a person who is employed on a full-time or part-time regular basis ~~(i.e., nonseasonal)~~. In addition, commencing with the next fiscal year, a seasonal or temporary employee of the City of Burlington who works ten (10) or more hours per week and has been employed by the City of Burlington for a period of four years shall be considered a covered employee commencing in the fifth year of employment. "Employee" shall not refer to volunteers working without pay or for a nominal stipend, persons working in an approved apprenticeship program, persons who are hired for a prescribed period of six months or less to fulfill the requirements to obtain a professional license as an attorney, persons who are hired through youth employment programs or student workers or interns participating in established educational internship programs.

(~~f~~g) Employer-assisted health care means health care benefits provided by employers for employees (or employees and their dependents) at the employer's cost or at an employer contribution towards the purchase of such health care benefits, provided that the employer cost or contribution consists of at least one dollar and twenty cents ($1.20) per hour. (Said amount shall be adjusted every two (2) years for inflation, by the chief administrative officer of the city.)

(~~g~~h) Livable wage has the meaning set forth in section 21-82.

(i) Retaliation shall mean the denial of any right guaranteed under this article, and any threat, discipline, discharge, demotion, suspension, reduction of hours, or any other adverse action against an employee for exercising any right guaranteed under this article. Retaliation shall also include coercion, intimidation, threat, harassment, or interference in any manner with any investigation, proceeding, or hearing under this article.

(j) Service contract means a contract primarily for the furnishing of services to the City of Burlington (as opposed to the purchasing or leasing of goods or property) A contract involving the furnishing of financial products, insurance products, ~~and~~ or software, even if that contract also includes some support or other services related to the provision of the products, shall not be considered a service contract.

Sec. 21-82. - Livable wages required.

(a) Every covered employer shall pay each and every covered employee at least a livable wage ("Livable Wage") ~~as established under this article.~~ no less than:

(1) For a covered employer that provides employer assisted health care, the livable wage shall be at least ~~nine dollars and ninety cents~~thirteen dollars and ninety four cents ($13.94~~9.90~~) per hour on the effective date of the amendments ~~is~~ to this article [~~Dec. 19, 2001~~].

(2) For a covered employer that does not provide employer assisted health care, the livable wage shall be at least ~~eleven dollars and sixty-eight cents~~fifteen dollars and eighty three cents ($15.83~~11.68~~) per hour on the effective date of the amendments to this article [~~Dec. 19, 2001~~].

(3) ~~Tipped covered employees and other ce~~Covered employees whose wage compensation consists of more or other than hourly wages, including, but not limited to, tips, commissions, flat fees or bonuses, shall be paid so that the total of all wage ~~an hourly wage which, when combined with the other~~ compensation, will at least equal the ~~l~~Livable ~~w~~Wage as established under this article.

(b) The amount of the ~~l~~Livable ~~w~~Wage established in this section shall be adjusted by the chief administrative officer of the city, as of July 1st~~first~~ of each year based upon a report of the Joint Fiscal Office of the State of Vermont that describes the basic needs budget for a single person but utilizes a model of two (2) adults residing in a two-bedroom living unit in an urban area with the moderate cost food plan. Should there be no such report from the joint fiscal office, the chief administrative officer shall obtain and utilize a basic needs budget that applies a similar methodology. The livable wage rates derived from utilizing a model of two (2) adults residing in a two-bedroom living unit in an urban area with a moderate cost food plan shall not become effective until rates meet or exceed the 2010 posted livable wage rates. Prior to the first day of May preceding any such adjustment and prior to the first day of May of each calendar year thereafter, the chief administrative officer will provide public notice of this adjustment by ~~publishing a notice in a newspaper of general circulation, by~~ posting a written notice in a prominent place in City Hall, by sending written notice to the city council and, in the case of covered employers that have requested individual notice and provided contact information ~~an address of record~~ to the chief administrative officer, by notice ~~written letter~~ to each such covered employer. However, once a Livable Wage is applied to an individual employee, no reduction in that employee's pay rate is permissible due to this annual adjustment.

(c) Covered employers shall provide at least twelve (12) compensated days off per year for full-time covered employees, and a proportionate amount for part-time covered employees, for sick leave, vacation, ~~or~~ personal, or combined time off leave.

Sec. 21-83. - Applicability.

(a) This article shall apply to any service contract or grant, as provided by this article that is awarded or entered into after the effective date of the article ~~[Dec. 19, 2001]~~. After the effective date of the article, entering into any agreement or an extension, renewal or amendment of any contract or grant as defined herein shall be subject to compliance with this article.

(b) The requirements of this article shall apply during the term of any service contract subject to the article. Covered employers who receive grants shall comply with this article during the period of time the ~~city's~~ funds awarded by the City of Burlington are being expended by the covered employer.

Sec. 21-84. - Enforcement.

(a) ~~The City of Burlington shall require, as a condition of any~~Each service contract or grant covered by this article ~~section,~~ shall contain provisions requiring that the ~~affected~~ covered employer or grantee submit a written certification, under oath, during each year during the term of the service contract or grant, that the covered employer or grantee (including all of its subcontractors and subgrantees, if any) is in compliance with this article. The failure of a contract to contain such provisions does not excuse a covered employer from its obligations under this ordinance. ~~confirming payment of a livable wage as a condition of entering into said contract or grant.~~ The ~~affected~~ covered employer shall agree to post a notice regarding the applicability of this section in any workplace or other location where employees or other persons contracted for employment are working. The ~~affected~~ covered employer shall agree to provide payroll records or other documentation for itself and any subcontractors or subgrantees, as deemed necessary by the chief administrative officer of the City of Burlington within ten (10) business days from receipt of the City of Burlington~~city~~'s request.

(b) The chief administrative officer of the City of Burlington may require that a covered employer submit proof of compliance with this article at any time, including but not limited to

(1) verification of an individual employee's compensation.

(2) production of payroll, health insurance enrollment records, or other relevant documentation, or

(3) evidence of proper posting of notice.

If a covered employer is not able to provide that information within ten (10) business days of the request, the chief administrative officer may turn the matter over to the city attorney's office for further enforcement proceedings.

(c) The City of Burlington shall appoint a designated accountability monitor that shall have the authority:

(i) To inform and educate employees of all applicable provisions of this article and other applicable laws, codes, and regulations;

(ii) To create a telephonic and electronic accountability system under this article that shall be available at all times to receive complaints under this article;

(iii) To establish and implement a system for processing employees' complaints under this article, including a system for investigating complaints and determining their ~~legitimacy~~initial credibility; and

(iv) To refer creditble complaints to the City Attorney's office for potential enforcement action under this article.

The designated accountability monitor shall forward to the City of Burlington all credible complaints of violations within ten (10) days of their receipt.

(ed) Any covered employee who believes his or her covered employer is not complying with this article may file a complaint in writing with the City Attorney's office within one (1) year after the alleged violation. The City Attorney's office shall conduct an investigation of the complaint, during which it may require from the covered employer evidence such as may be required to determine whether the covered employer has been compliant, and shall make a finding of compliance or noncompliance within a reasonable time after receiving the complaint. Prior to ordering any penalty provided in subsections (e), (f), or (g) below, the City Attorney's office shall give notice to the covered employer. The covered employer may request a hearing within thirty (30) days of receipt of such notice. The hearing shall be conducted by a hearing

officer appointed by the City Attorney's office, who shall affirm or reverse the finding or the penalty based upon evidence presented by the City Attorney's office and the covered employer.

(ee~~b~~) The City of Burlington shall have the right to modify, terminate and/or seek specific performance of any contract or grant with ~~an affected~~a covered employer from any court of competent jurisdiction, if the ~~affected~~ covered employer has not complied with this article.

(f~~d~~e) Any covered employer who violates this article may be barred from receiving a contract or grant from the city for a period up to two (2) years from the date of the finding of violation.

(e~~d~~g) A violation of this article shall be a civil offense subject to a civil penalty of from two hundred dollars ($200.00) to five hundred dollars ($500.00). All law enforcement officers and any other duly authorized municipal officials are authorized to issue a municipal complaint for a violation of this article. Each day any covered employee is not compensated as required by this article shall constitute a separate violation.

(h) If a complaint is received that implicates any City of Burlington employee in a possible violation of this ordinance, that complaint will be handled through the City's personnel procedures, not through the process outlined in this ordinance.

(~~f~~i-) Any covered employee aggrieved by a violation of this article may bring a civil action in a court of competent jurisdiction against the covered employer within two (2) years after discovery of the alleged violation. The court may award any covered employee who files suit pursuant to this section, as to the relevant period of time, the following:

(i) The difference between the livable wage required under this article and the amount actually paid to the covered employee;

(ii) Equitable payment for any compensated days off that were unlawfully denied or were not properly compensated;

(iii) ~~I~~Liquidated damages in an amount equal to the amount of back wages and/or compensated days off unlawfully withheld or ~~of~~ $50 for each employee or person whose rights under this article were violated for each day that the violation occurred or continued, whichever is greater;

(iv) ~~r~~Reinstatement in employment and/or injunctive relief; and

(v) ~~r~~Reasonable attorneys' fees and costs.

(~~g~~j) It shall be unlawful for an employer or any other person to interfere with, restrain, or deny the exercise of, or the attempt to exercise, any right protected under this article. No person

shall engage in retaliation against an employee or threaten to do so because such employee has exercised rights or is planning to exercise rights protected under this article or has cooperated in any investigation conducted pursuant to this article.

Sec. 21-85. - Other provisions.

(a) No ~~affected~~ covered employer shall reduce the compensation, wages, fringe benefits or leave available to any covered employee in order to pay the livable wage required by this article. Any action in violation of this paragraph shall be deemed a violation of this article subject to the remedies of section 21-84.

(b) No covered employer with a current contract, as of the effective date of this provision, with the City of Burlington for the use of property located at the Burlington International Airport may reduce, during the term of that contract, the wages of a covered employee below the Livable Wage as a result of amendments to this ordinance.

(~~b~~c) Where pursuant to a contract for services with the city, the contractor or subcontractor incurs a contractual obligation to pay its employees certain wage rates, in no case except as stated in subsection 21-85(e~~d~~), shall the wage rates paid pursuant to that contract be less than the minimum livable wage paid pursuant to this article.

(e~~d~~) Notwithstanding subsection 21-85(~~b~~c), where employees are represented by a bargaining unit or labor union pursuant to rights conferred by state or federal law and a collective bargaining labor agreement is in effect governing the terms and conditions of employment of those employees, this chapter shall not apply to those employees, and the collective bargaining labor agreement shall control.

(~~d~~e) Covered employers shall inform employees making less than twelve dollars ($12.00) per hour of their possible right to the Earned Income Tax Credit under federal and state law.

(e~~f~~) The chief administrative officer of the city shall have the authority to promulgate rules as necessary to administer the provisions of this article, which shall become effective upon approval by the city council.

Sec. 21-86. - Exemptions.

An ~~partial or complete~~ exemption from ~~the~~ any requirement of this article may be requested for a period not to exceed two (2) years:

(a) By a covered employer where payment of the livable wage ~~authorized based upon a determination that compliance with the livable wage requirement~~ would cause substantial economic hardship; and

(b) By the City of Burlington ~~,~~ where application of this article to a particular contract or grant is found to violate specific state or federal statutory, regulatory or constitutional ~~provision or~~ provisions or where granting the exemption would be in the best interests of the City.

A covered employer or grantee granted an exemption under this Section 21-86 may reapply for an exemption upon the expiration of the exemption.

Requests for exemption may be granted by majority vote of the City Council. All requests for exemption shall be submitted to the chief administrative officer. The finance committee ~~board~~ of the ~~city~~ City of Burlington shall first consider such request and make a recommendation to the City Council. The decision of the City Council shall be final. ~~shall consider the request for exemption with prior notice provided to the city council. A unanimous decision by the finance board shall be final. A split decision by the finance board is reviewable by the city council not later than the next meeting of the city council which occurs after the date of the finance board decision.~~

Sec. 21-87. - Severability.

If any part or parts or application of any part of this article is held invalid, such holding shall not affect the validity of the remaining parts of this article.

Section 21-88. Annual Reporting.

On or before April 15th of each year, the City Attorney's office shall submit a report to the City Council that provides the following information:

(a) ~~all~~ list of all covered employers broken down by department;

(b) a list of all covered employers whose service contract did not contain the language required by this article; and

(c) all complaints filed and investigated by the City Attorney's office and the results of such investigation.

Sec. 21-89. Effective Date.

The amendments to this ordinance shall take effect on January 1, 2014, and shall not be retroactively applied.

* Material stricken out deleted.
** Material underlined added.

lb/EBlackwood/c: Ordinances 2013/Offenses & Misc..Provisions, Article VI – Livable Wages, Sections 21-80 - 21-89
9/18/13; 10/16/13; 10/21/13

Attachment E

Certification of Compliance with the City of Burlington's Livable Wage Ordinance

I, _____, on behalf of _____ (Contractor/Consultant) and in connection with the _____ (project), hereby certify under oath that (1) Contractor shall comply with the City of Burlington's Livable Wage Ordinance; (2) as a condition of entering into this contract or grant, Contractor confirms that all covered employees, as defined by Burlington's Livable Wage Ordinance, shall be paid a livable wage for the term of the contract as determined and adjusted annually by the City of Burlington's Chief Administrative Officer, (3) a notice regarding the applicability of the Livable Wage Ordinance shall be posted in the workplace or other location where covered employees work, and (4) payroll records or other documentation, as deemed necessary by the Chief Administrative Officer, shall be provided within ten (10) business days from receipt of the City's request.

Dated at _____, Vermont this ____ day of _____, 2015.

By:_____
Duly Authorized Agent

Subscribed and sworn to before me: _____
Notary

BURLINGTON'S OUTSOURCING ORDINANCE

ARTICLE VII. OUTSOURCING

21-90 Policy.

It is the policy of the City of Burlington to let service contracts to contractors, subcontractors and vendors who perform work in the United States.

(Ord. of 11-21-05/12-21-05)

21-91 Definitions.

(a) *Contractor* or *vendor.* A person or entity that has a contract with the City of Burlington primarily for the furnishing of services (as opposed to the purchasing of goods), including any subcontractors of such contractor or vendor.

(b) *Government funded project.* Any contract for services which involves any city funds and the total amount of the contract is fifty thousand dollars ($50,000.00) or more. Burlington School Department contracts shall not be considered government funded projects under this article.

(c) *Outsourcing.* The assigning or reassigning, directly, or indirectly through subcontracting, of services under a government funded project to workers performing the work outside of the United States.

(Ord. of 11-21-05/12-21-05)

21-92 Implementation.

(a) No contract for a government funded project shall be let to any contractor, subcontractor, or vendor who is outsourcing, or causing the work to be performed outside of the United States or Canada.

(b) Prior to the commencement of work on a government funded project a contractor, subcontractor or vendor shall provide written certification that the services provided under the contract will be performed in the United States or Canada.

(Ord. of 11-21-05/12-21-05)

21-93 Exemption.

An exemption from requirements of this article may be authorized by the chief administrative officer based upon a determination that the services to be performed for the government funded project are not available in the United States or Canada at a reasonable cost. Any such exemption decision by the chief administrative officer shall be reported to the board of finance in writing within five (5) days. The board of

finance may, if it should vote to do so, override the exemption decision if such vote occurs within fourteen (14) days of the date of the chief administrative officer's communication to such board.

(Ord. of 11-21-05/12-21-05)

21-94 Enforcement.

(a) Any contractor, subcontractor or vendor who files false or materially misleading information in connection with an application, certification or request for information pursuant to the provisions of this article or outsources work on a government funded project shall be deemed to be in violation of this article.

(b) A violation of this article shall be a civil offense subject to a civil penalty of from one hundred dollars ($100.00) to five hundred ($500.00). All law enforcement officers and any other duly authorized municipal officials are authorized to issue a municipal complaint for a violation of this article. Each day any violation of any provision of this article shall continue shall constitute a separate violation.

(c) The City of Burlington shall have the right to modify, terminate and or seek specific performance of any contract for a government funded project if the contractor, subcontractor or vendor has not complied with this article.

(Ord. of 11-21-05/12-21-05)

21-95—21-99 Reserved.

Attachment F

Certification of Compliance with the City of Burlington's Outsourcing Ordinance

I, _____, on behalf of _____ (Contractor) and in connection with the _____[project], hereby certify under oath that (1) Contractor shall comply with the City of Burlington's Outsourcing Ordinance (Ordinance §§ 21-90 – 21-93); (2) as a condition of entering into this contract or grant, Contractor confirms that the services provided under the above-referenced contract will be performed in the United States or Canada.

Dated at _____, Vermont this ____ day of _____, 2015.

By:_____
Duly Authorized Agent

Subscribed and sworn to before me: _____
Notary

BURLINGTON'S UNION DETERRENCE ORDINANCE

ARTICLE VIII. UNION DETERRENCE

21-100 Policy.

It is the policy of the City of Burlington to limit letting contracts to organizations that provide union deterrence services to other companies.

(Ord. of 3-27-06/4-26-06)

21-101 Definitions.

(a) *Contractor or vendor.* A person or entity that has a contract with the City of Burlington primarily for the furnishing of services (as opposed to the purchasing of goods), including any subcontractors of such contractor or vendor.

(b) *Government funded project.* Any contract for services which involves any City funds and the total amount of the contract is fifteen thousand dollars ($15,000.00) or more. Burlington School Department contracts shall not be considered government funded projects under this article.

(c) *Union deterrence services.* Services provided by a contractor, subcontractor or vendor that are not restricted to advice concerning what activities by an employer are prohibited and permitted by applicable laws and regulations, but extend beyond such legal advice to encouraging an employer to do any of the following:

1) Hold captive audience, (i.e., mandatory) meetings with employees encouraging employees to vote against the union;

2) Have supervisors force workers to meet individually with them to discuss the union;

3) Imply to employees, whether through written or oral communication, that their employer may have to shut down or lay people off if the union wins the election;

4) Discipline or fire workers for union activity;

5) Train managers on how to dissuade employees from supporting the union.

(d) *Substantial portion of income.* For the purposes of this article, substantial portion of income shall mean greater than ten (10) percent of annual gross revenues or one hundred thousand dollars

($100,000.00), whichever is less.

(Ord. of 3-27-06/4-26-06)

21-102 Implementation.

(a) No contract for a government funded project shall be let to any contractor, subcontractor, or vendor who

1) Advises or has advised an employer to conduct any illegal activity in its dealings with a union.

2) Advertises union deterrence services as specialty services;

3) Earns a substantial portion of its income by providing union deterrence services to other companies in order to defeat union organizing efforts.

(b) Prior to the commencement of work on a government funded project a contractor, subcontractor or vendor shall provide written certification that it has not advised the conduct of any illegal activity, it does not currently, nor will it over the life of the contract provide union deterrence services in violation of this article.

(Ord. of 3-27-06/4-26-06)

21-103 Enforcement.

(a) Any contractor, subcontractor or vendor who files false or materially misleading information in connection with an application, certification or request for information pursuant to the provisions of this article or provided union deterrence services during the life of a contract for a government funded project shall be deemed to be in violation of this article.

(b) The City of Burlington shall have the right to modify, terminate and or seek specific performance of any contract for a government funded project if the contractor, subcontractor or vendor has not complied with this article.

(Ord. of 3-27-06/4-26-06)

21-104—21-110 Reserved.

Attachment G

Certification of Compliance with the City of Burlington's
Union Deterrence Ordinance

I, _____, on behalf of _____ (Contractor) and in connection with _____ (City contract/project/grant), hereby certify under oath that _____ (Contractor) has not advised the conduct of any illegal activity, and it does not currently, nor will it over the life of the contract advertise or provide union deterrence services in violation of the City's union deterrence ordinance.

Dated at _____, Vermont this ___ day of _____, 2015.

By:_____
Duly Authorized Agent

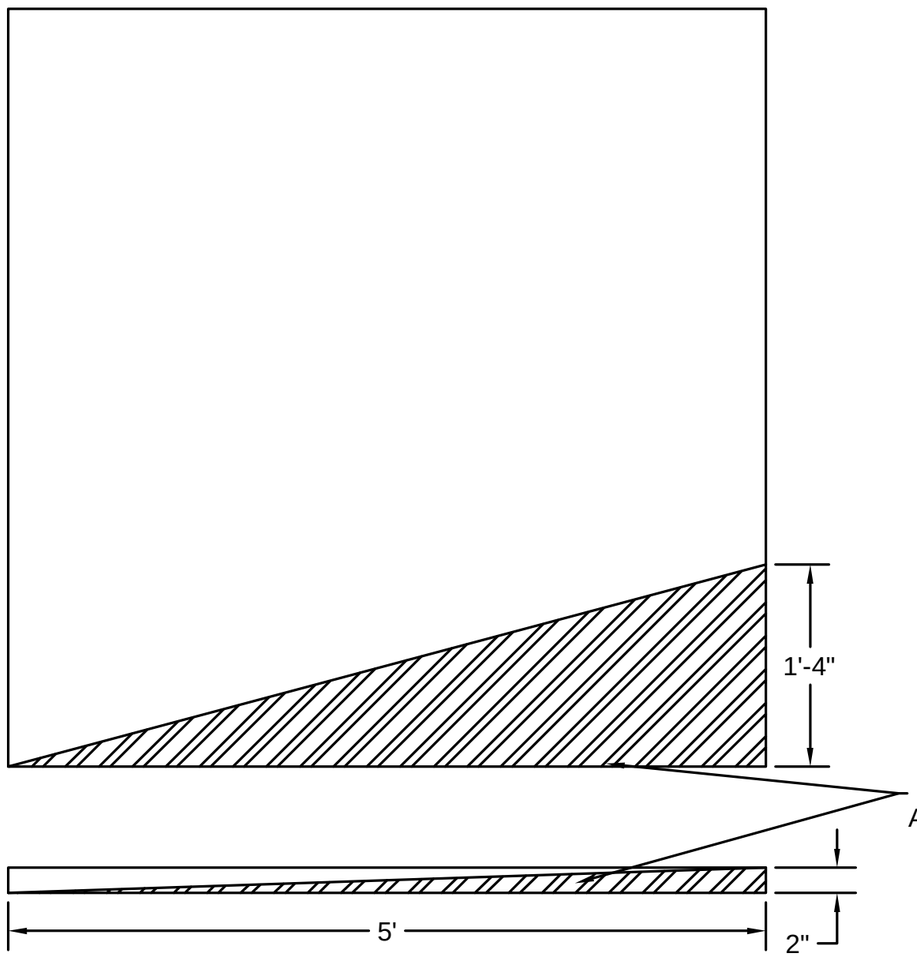

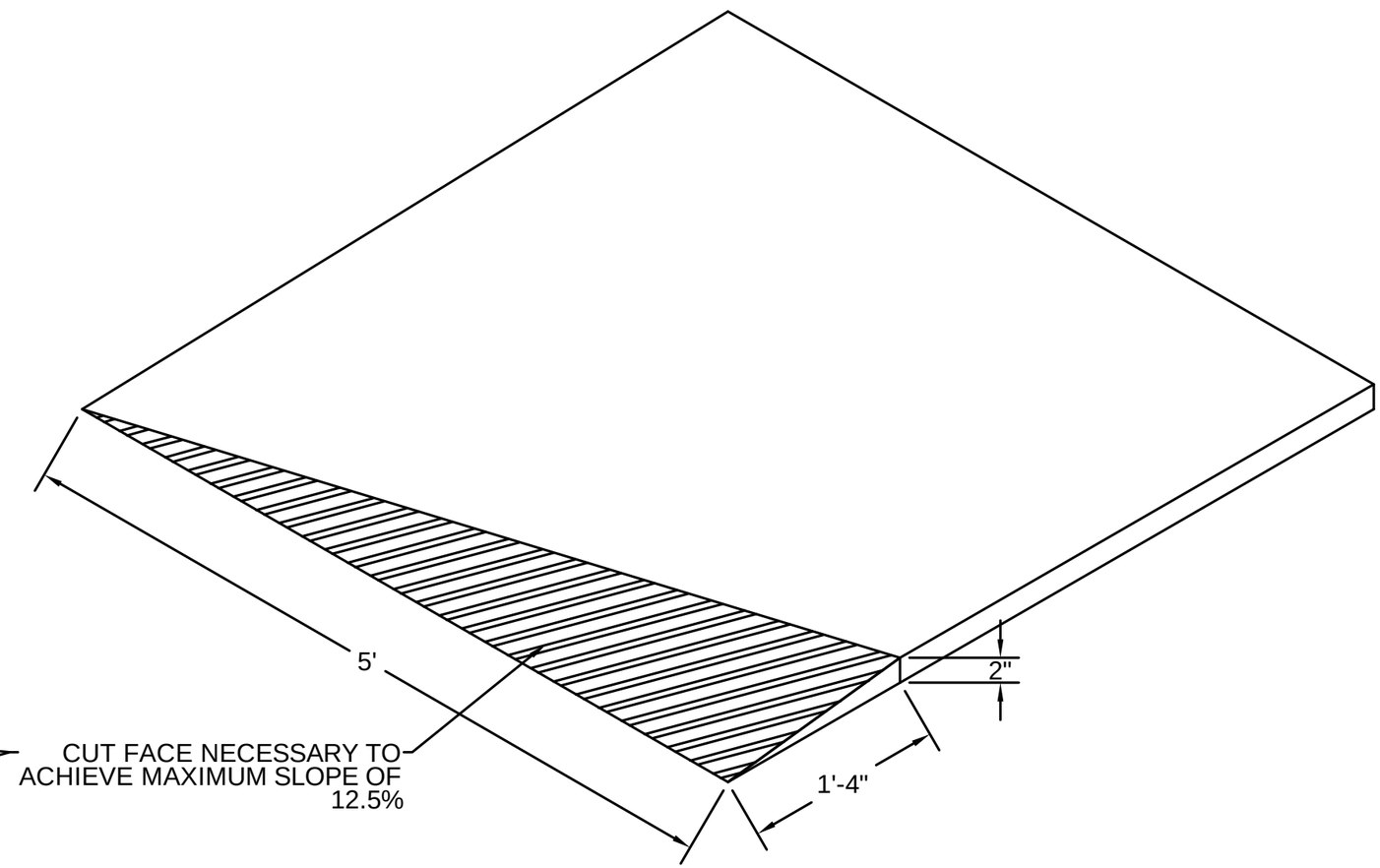

CUT FACE NECESSARY TO ACHIEVE MAXIMUM SLOPE OF 12.5%

1 INCH SIDEWALK CUT EXAMPLE

BURLINGTON, VT PUBLIC WORKS

BURLINGTON PUBLIC WORKS ENGINEERING DIV.

645 PINE STREET
BURLINGTON, VT 05401
(802) 863-9094
(802) 863-0466 (Fax)

DESIGNED BJT	RFS NO. N/A
DRAWN BJT	SCALE 1"=1'
CHECKED XXX	DRAWING NO.
DATE 08/11/2015	SHEET 1 OF 1