Appendix

GREAT STREETS BTV

City of Burlington
Downtown Street Design & Construction Standards

Appendix

GREAT STREETS BTV

City of Burlington
Downtown Street Design & Construction Standards

Glossary & References

Key Terms

AASHTO: American Association of State Highway and Transportation Officials

ADA: Americans with Disabilities Act

ADAAG: Americans with Disabilities Act—Standards for Accessible Design

Bikeways: A path or lane for the use of bicycles that is typically in the Roadway Zone.

Complete Street: Street environments that are designed and operated to enable safe access for all users, including pedestrians, bicyclists, motorists and transit riders of all ages and abilities. Users also benefit from enhancements to the street that increase safety and comfort, including traffic calming, enhanced bus stops, updated utilities and lighting, increased stormwater infrastructure, and improved tree belts.

Furnishings: Objects placed or fixed in the public right of way for public use, such as mailboxes, bike racks, and benches.

Green Belt: The area between the curb and the Clear Sidewalk Zone that is finished with turf and/or other plantings that support the growth of street trees, and does not function as a finished surface for walking and/or the placement of street furnishings.

MUTCD: Manual on Uniform Traffic Control Devices

NACTO: National Association of City Transportation Officials

Pedestrian Zone: The portion of a public right of way that is outside of the curbs that is considered to be the "sidewalk." The sidewalk is comprised of some or all of the following elements: Buffer Zone, Tree Belt/Furnishing Zone, Clear Sidewalk Zone, and/or Frontage Zone. The sidewalk does not include areas between the curb and the Clear Sidewalk Zone that is vegetated and functions as a Green Belt or is part of a Tree Well or Tree Pit.

PROWAG: Proposed Right-of-Way Accessibility Guidelines

Public Investment Action Plan (PIAP): 2013 action plan that solicited proposals for infrastructure improvements to the Burlington Waterfront from public and private entities.

Right of Way: In downtown Burlington, street right-of-way (ROW) is defined as the public space between private property lines.

Roadway Zone: The portion of a public right of way that is between the curbs, and typically includes travel & turn lanes, parking lanes, bikeways, crosswalks, etc.

Shared Street: A shared street is an approach that minimizes the segregation between modes of road user, usually by eliminating curbs, road markings, and traffic signs. The goal of shared space is to improve the road safety and vibrancy of roads and junctions, particularly ones with high levels of pedestrian traffic, by encouraging negotiation of priority in shared areas between different road users.

Street Classification:

- Class I Town Highways: those town highways which form the extension of a state highway route and which carry a State highway route number.
- Class II Town Highway: those town highways selected as the most important highways in each town.
- Class III Town Highway: all traveled town highways other than class 1 or 2 highways. The minimum standards for class 3 highways are a highway negotiable under normal conditions all seasons of the year by a standard manufactured pleasure car. This would include but not be limited to sufficient surface and base, adequate drainage, and sufficient width capable to provide winter maintenance; should be plowed and made negotiable during the winter.
- Class IV Town Highway: all town highways that are not class 1, 2, or 3 town highways or unidentified corridors.

Street Corridor: Refers to a particular street segment as a whole, including its urban makeup and character from a given start point to a given end point that could span for multiple blocks or multiple miles.

Tree Pit/Well/Grate: The area immediately surrounding the trunk of a tree which is planted with grass or other vegetation (tree well) or is protected by a tree grate and is necessary to support the growth of street trees. See page *"Tree Belt & Green Belt Typologies" on page 176*.

VTrans: Vermont Agency of Transportation

References & Resources

Users of this manual are encouraged to consult the following resources for additional information:

planBTV Downtown & Waterfront Master Plan—City of Burlington

planBTV Downtown Form Based Code—City of Burlington

planBTV Walk Bike Master Plan—City of Burlington

Urban Bikeway Design Guide—National Association of City Transportation Officials (NACTO)

Urban Street Design Guide—National Association of City Transportation Officials (NACTO)

Separated Bike Lane Planning and Design Guide—U.S. Department of Transportation/Federal Highway Administration

Separated Bike Lane Planning & Design Guide 2015—Massachusetts Department of Transportation

Vermont Pedestrian and Bicycle Facility Planning and Design Manual—Vermont Agency of Transportation

San Francisco Parklet Manual (2.2)—City of San Francisco/Pavement to Parks

Complete Streets: a Guide for Vermont Communities—Vermont Department of Health

Street Design Guidelines: Burlington Transportation Plan—City of Burlington

Downtown Parking and Transportation Management Plan—City of Burlington

Residential Parking Management Plan—City of Burlington

Quick Build Design Guide-- City of Burlington

Urban Forestry Master Plan, City of Burlington—Northern Vermont Resource Conservation and Development Council/Vermont Department of Forests, Parks and Recreation

Burlington Parks, Recreation & Waterfront Master Plan—Burlington Parks/Recreation/Waterfront

VTrans Standard Drawings

Vermont Roadside Historic Site Markers

Lake Champlain Wayside Exhibit Manual

Adoption & Amendments

These Standards are effective upon the following approvals and adoptions and subsequent amendments:

Approval by Burlington Parks, Recreation, & Waterfront Commission, December 5, 2017

Approval by Burlington Public Works Commission, December 20, 2017

Adoption by Burlington City Council Resolution, April 16, 2018

Roadway Zone Details

STEEL GRATE

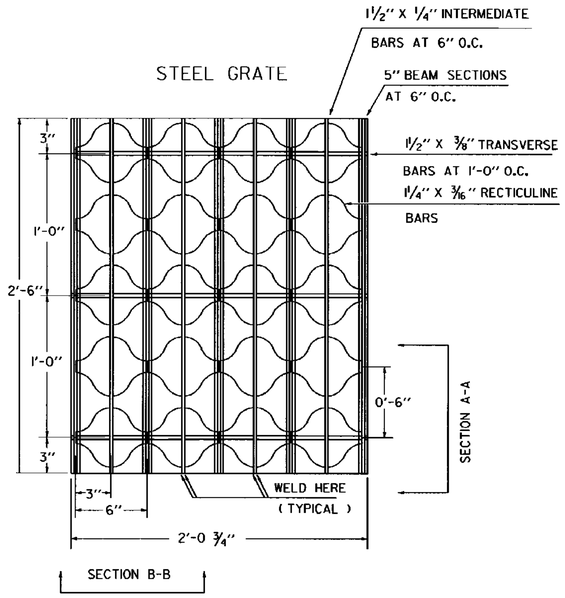

PLAN

GRATE SIZE SINGLE 24 ¾" X 30"
DOUBLE 24 ¾" X 54"

WEIGHT 95 LBS OR MORE
GRATES SHALL BE CAPABLE OF SUPPORTING H-20 (32,000 LB. AXLE LOAD) INCLUDING 30% IMPACT.

UNIT STRESSES (LBS PER SQ. IN.)	18,000	20,000
MAIN BAR PARALLEL TO TRAFFIC H-20	49"	53"
MAIN BAR PERPENDICULAR TO TRAFFIC H-20	39"	42"

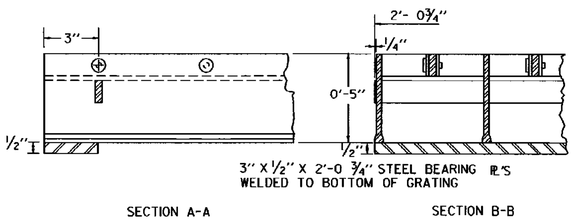

SECTION A-A SECTION B-B

CAST IRON COVER WITH FRAME

BAR	NO.	LENGTH	
B	4		8" 3'-8" 8"
C	6	3'-8"	STRAIGHT
D	4	3'-8"	STRAIGHT

ALL REINFORCING STEEL TO BE No. 5 DEFORMED BARS

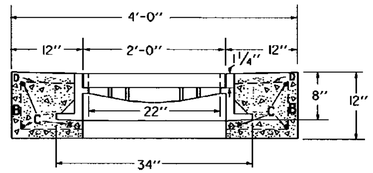

ELEVATION

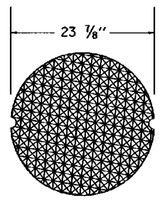

GENERAL NOTES:

WEIGHT OF FRAME AND COVER = 425 LBS.

PLAN

CAST IRON GRATE WITH FRAME

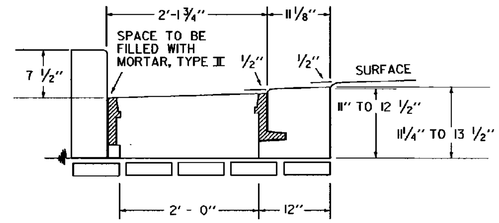

ELEVATION OF REINFORCED CONCRETE DROP INLET WITH VERTICAL GRANITE CURB AND 3 FLANGE CAST IRON FRAME FOR CAST IRON GRATE

SEE STANDARD D-9 FOR CONCRETE VOLUME, REINFORCING STEEL SCHEDULE, AND CURB JOINT DETAIL.

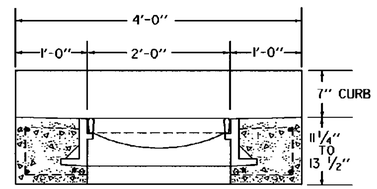

ELEVATION

WEIGHT OF 3 FLANGED FRAME AND GRATE

GRATE	220 LBS
FRAME	260 LBS
TOTAL	480 LBS

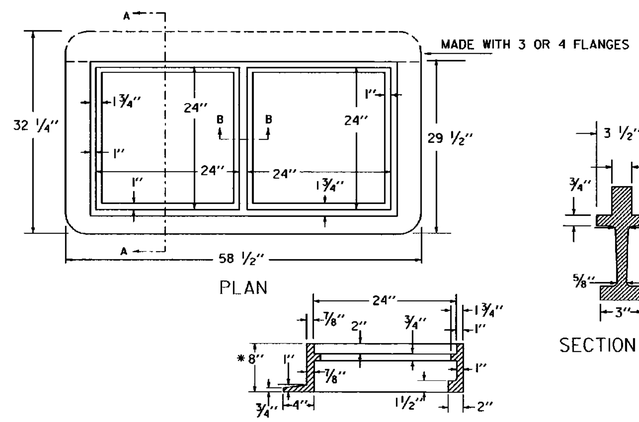

PLAN

SECTION A-A

RECTANGULAR CAST IRON FRAME FOR TWO 24" SQUARE CAST IRON GRATES

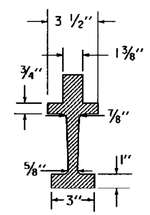

SECTION B-B

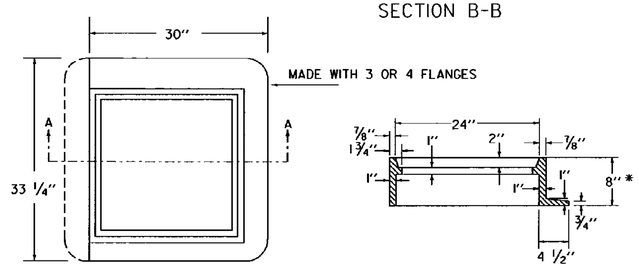

PLAN SECTION A-A

SQUARE CAST IRON FRAME FOR CAST IRON GRATE TYPE A

* NOTE: FRAME DEPTH TO BE "6" WHEN USED IN CONJUNCTION WITH DROP INLET DETAILED ON STANDARD D-6.

CAST IRON GRATE, TYPE A

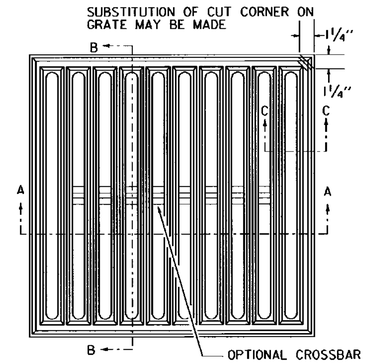

PLAN

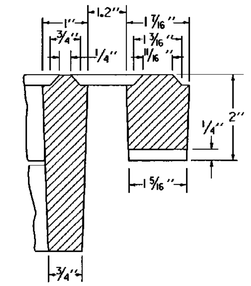

SECTION C-C

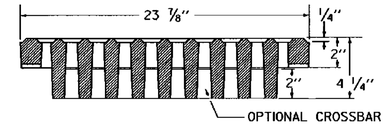

SECTION A-A

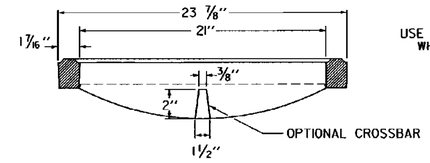

SECTION B-B

USE OF THE TYPE A GRATE IS PROHIBITED WHERE BICYCLE TRAFFIC IS EXPECTED

THIS FRAME TO BE PLACED IN DROP INLET TOP BEFORE CONCRETE IS POURED.

4 FLANGES UNLESS OTHERWISE INDICATED. FRAMES TO BE FURNISHED WITH 3 FLANGES WHEN USED IN CONJUNCTION WITH CURB OR AS DIRECTED BY THE ENGINEER.

REVISIONS AND CORRECTIONS

DEC. 6, 1971 - ORIGINAL APPROVAL
APR. 25, 1972 - CAST IRON COVER CHANGED FROM SQUARE TO CIRCULAR
SEPT. 4, 1980 - OPTIONAL CROSSBAR ADDED TO A GRATE: NOTE ADDED TO A GRATE FRAME DETAIL
AUG. 25, 1981 - NOTE ADDED RESTRICTING USE OF TYPE A GRATE
JUNE 1, 1994 - REISSUED, WITHOUT CHANGE, UNDER NEW SIGNATURES.

APPROVED

APPROVED FOR THIS PROJECT AND/OR DESIGN IMPLEMENTATION. FHWA FINAL APPROVAL PENDING.

Gordon S. MacArthur, P.E.
DIRECTOR OF ENGINEERING

Robert M. Murphy, PE
DESIGN ENGINEER

STEEL GRATE
CAST IRON GRATE TYPE A
CAST IRON COVER

VERMONT AGENCY OF TRANSPORTATION

STANDARD
D-11

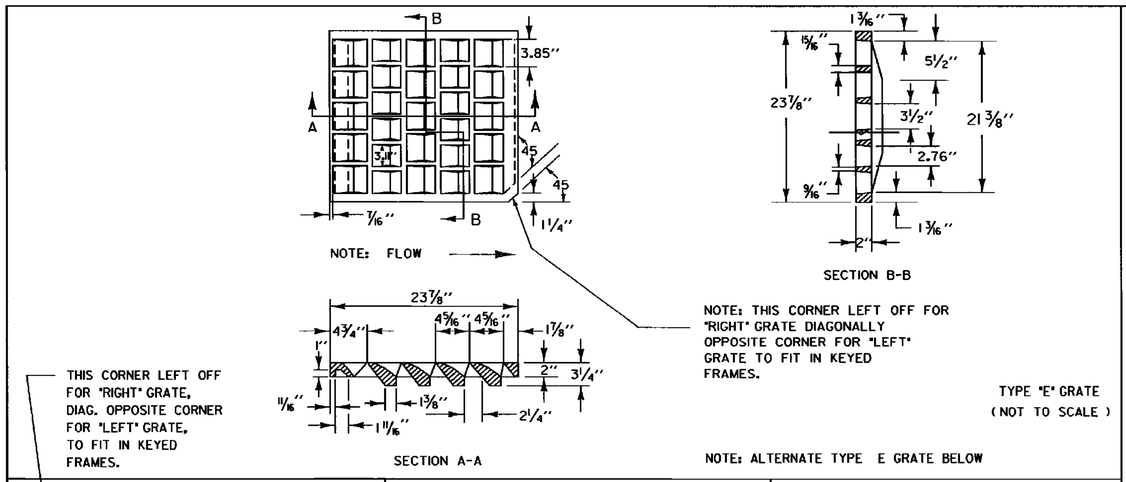

TYPE "E" GRATE
(NOT TO SCALE)

NOTE: ALTERNATE TYPE E GRATE BELOW

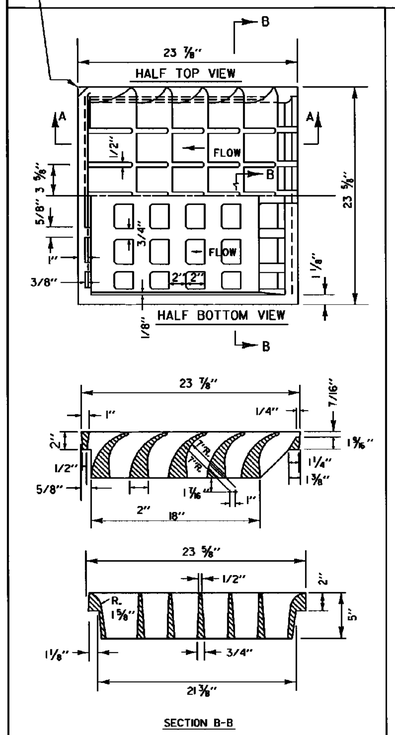

CAST IRON GRATE
TYPE E

NOTE: THIS FRAME TO BE PLACED IN DROP INLET TOP BEFORE CONCRETE IS POURED.

4 FLANGES UNLESS OTHERWISE INDICATED.

FRAMES TO BE FURNISHED WITH 3 FLANGES WHEH USED IN CONJUNCTION WITH CURB OR AS DIRECTED BY THE ENGINEER.

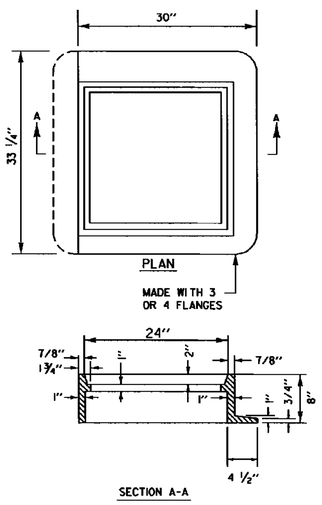

FRAME
FOR
TYPE D OR TYPE E
GRATE

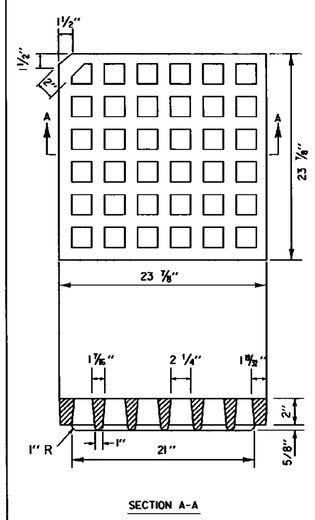

CAST IRON GRATE
TYPE D

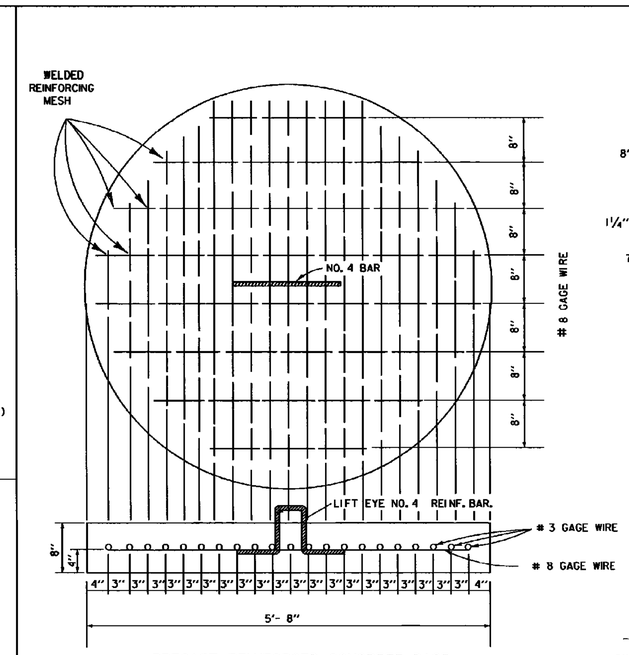

PRECAST REINFORCED CONCRETE BASE

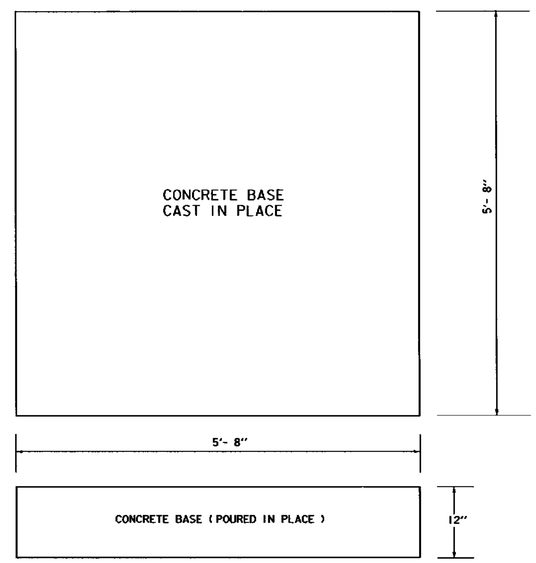

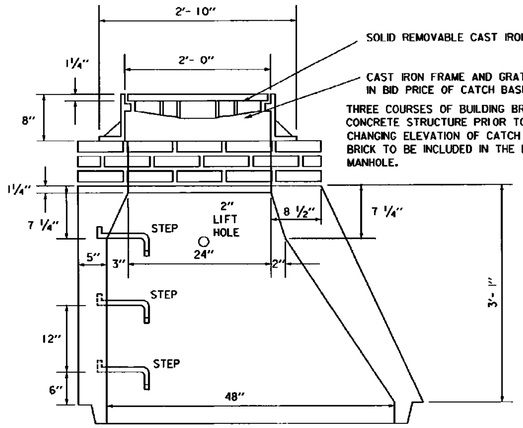

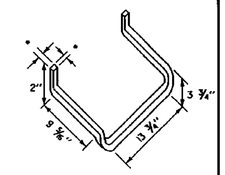

ALUMINUM STEP
(DROP FRONT)

* - INDIVIDUAL METAL RUNGS SHALL HAVE A MINIMUM DIMENSION OF 1" OR SHALL BE PAINTED OR OTHERWISE TREATED TO RESIST CORROSION AND RUSTING.

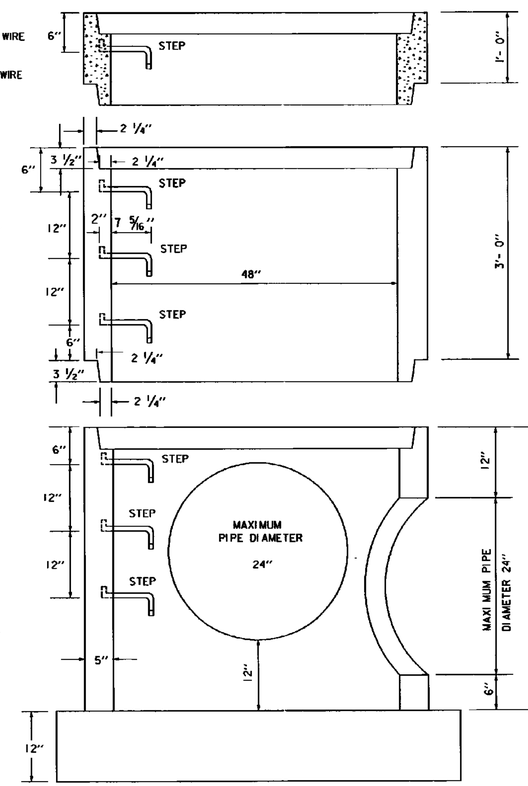

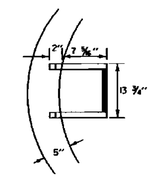

STEP DETAIL
TOP VIEW

REVISIONS AND CORRECTIONS

DEC. 6, 1971 - ORIGINAL APPROVAL
OCT. 22, 1976 - CAST IRON GRATE WITH FRAME, TYPE E ADDED
OCT. 6, 1978 - TYPE D GRATE ADDED
OCT. 30, 1985 - IMPERFECT TRENCH DETAILS DELETED
FEB. 17, 1993 - SECOND CAST IRON GRATE TYPE E ADDED.
MAR. 23, 1994 - ADDED NOTE FOR STEP DETAILS
JUNE 1, 1994 - REISSUED, WITHOUT CHANGE, UNDER NEW SIGNATURES.

APPROVED

APPROVED FOR THIS PROJECT AND/OR DESIGN IMPLEMENTATION. FHWA FINAL APPROVAL PENDING.

Gordon B. MacArthur
DIRECTOR OF ENGINEERING

Robert M. Murphy
DESIGN ENGINEER

PRECAST REINFORCED CONCRETE CATCH BASIN W/ CAST IRON GRATE
PRECAST REINFORCED CONCRETE MANHOLE W/ CAST IRON COVER

CAST IRON GRATE WITH FRAME, TYPE D
CAST IRON GRATE WITH FRAME, TYPE E

VERMONT AGENCY OF TRANSPORTATION

STANDARD D-15

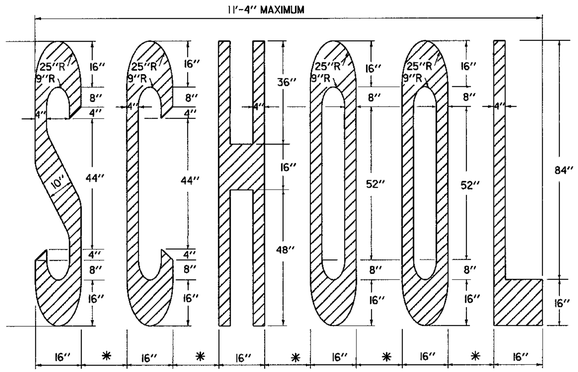

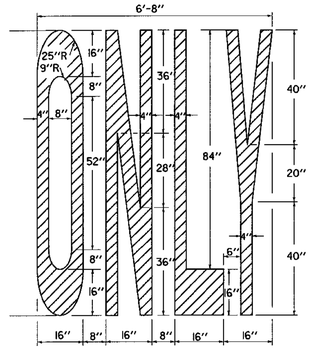

* (4''-8'') - ADJUST TO AVEILABLE PAVEMENT WIDTH

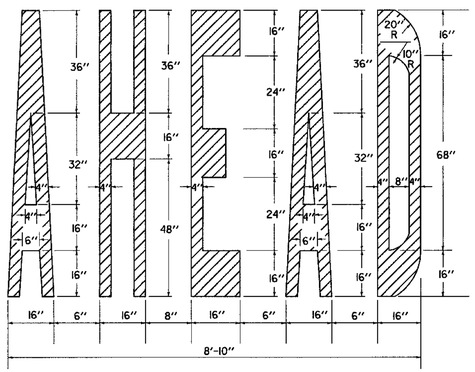

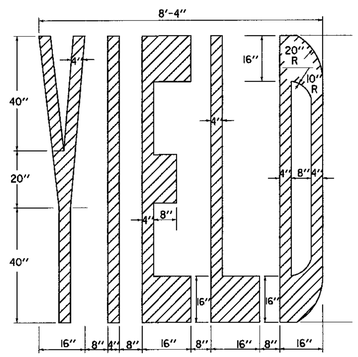

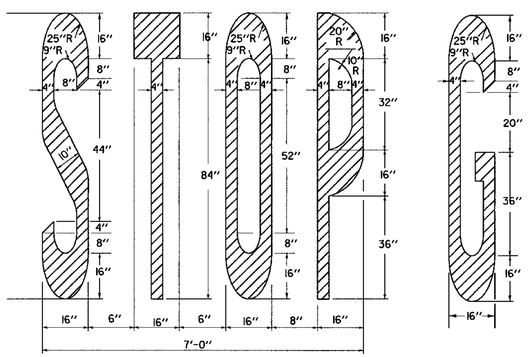

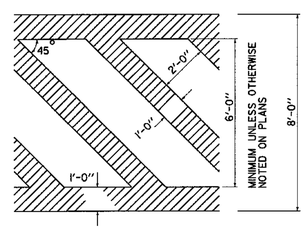

9' - 6"
SIGNAL
6" LETTER SPACING

LETTER HEIGHT

DIMENSIONS ARE FOR 8' - 4" LETTER HEIGHTS. A LESSER HEIGHT OF 8' - 0" IS ACCEPTABLE AS LONG AS THE DIMENSIONS ARE PROPORTIONAL TO THE DETAILS SHOWN SEE NOTE BELOW.

ARROWS AND WORD MARKINGS THAT CONFORM TO THE DIMENSIONS SHOWN ON THIS SHEET OR AS DETAILED IN THE BOOKLET ENTITLED "STANDARD ALPHABETS FOR HIGHWAY SIGNS AND PAVEMENT MARKINGS" AND THE "MANUAL ON UNIFORM TRAFFIC CONTROL DEVICES" (CURRENT EDITION) PREPARED BY THE FEDERAL HIGHWAY ADMINISTRATION WILL BE ACCEPTABLE.

LETTER IN WORD MARKING AND CROSSWALK DETAILS

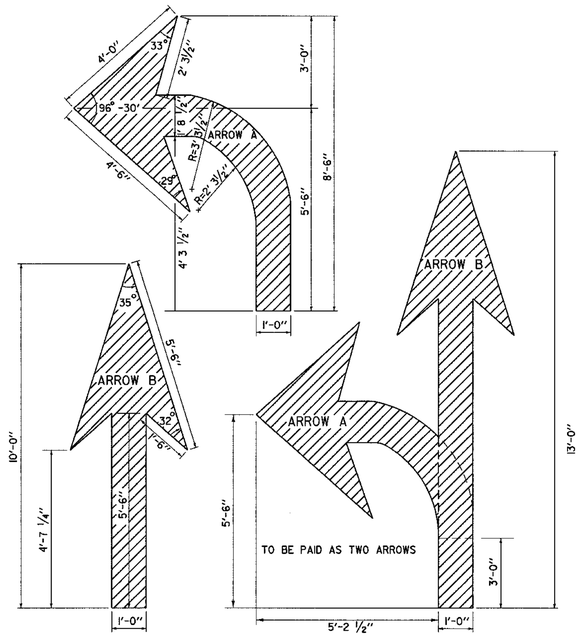

ARROW DETAILS

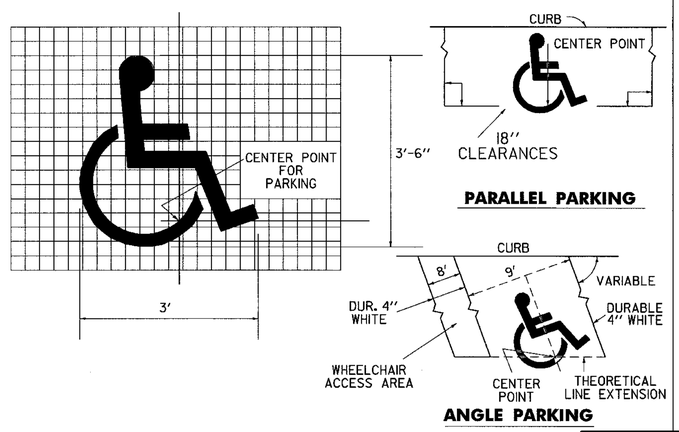

HANDICAPPED PAVEMENT MARKING DETAILS

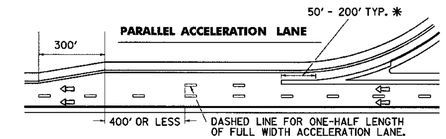

* USE LONGER LENGTH TO EMPHASIZE SITUATIONS WHERE THE CROSSING REQUIRES UNUSUAL CARE SUCH AS HIGH VOLUME MERGE AREAS.

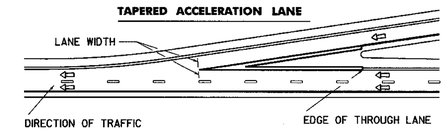

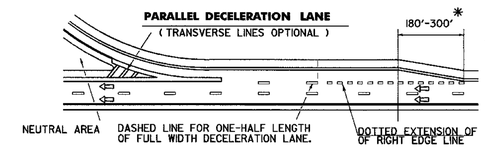

* SHORTER TAPERS GIVE A BETTER TARGET VALUE, HOWEVER ALIGNMENT MAY DICTATE A LONGER TAPER. RESIDENT ENGINEER SHALL ESTIMATE LENGTH.

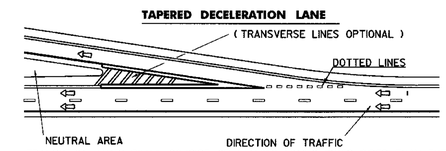

TRANSVERSE LINES SHALL CONSIST OF A WHITE LINE 2 TIMES WIDER THAN THE MAIN LINE MARKING WIDTH SPACED 5'-0" C-C AND SET AT 45° TO MAIN LINE EDGE LINES. THESE MARKINGS SHALL BE USED TO INCREASE VISIBILITY DUE TO DIFFICULT VERTICAL OR HORIZONTAL ALIGNMENT, AS DIRECTED BY THE RESIDENT ENGINEER.

RAMP MARKINGS

LEGEND

- WHITE LINES
- YELLOW LINES
- CHANNELIZATION WHITE LINES
- WHITE DOTTED LINES (2' SOLID - 4' GAP)
- DIRECTION OF TRAFFIC FLOW

IMPORTANT NOTE
ACTUAL LOCATION OF GORE MARKING TRANSITION CURVE MUST BE OFFSET FROM THE THEORETICAL RAMP EXTENSION LINE TO PROVIDE A VISUALLY SMOOTH RAMP ENTRANCE.

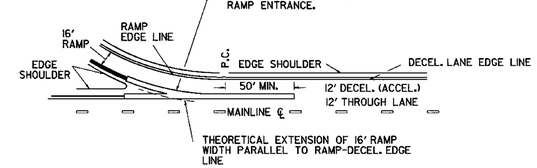

DETAIL - GORE MARKING TRANSITION CURVE

THIS SHEET IS NOT TO SCALE

OTHER STDS. REQUIRED

REVISIONS AND CORRECTIONS

SEPT. 10, 1987 - DATE OF ORIGINAL ISSUE
JAN. 23, 1989 - ADDED DOTTED LINES, "SIGNAL" DIMENSIONS, CLARIFIED LETTER HEIGHT.
AUG. 18, 1995 - MISC. NOTE CHANGES
FEB. 1, 1999 - CHANGED NOTES FOR ACCELERATION & DECELERATION LANES

APPROVED

Robert F. Stallmeyer Acting
DIRECTOR OF PROJECT DEVELOPMENT

PAVEMENT MARKING DETAILS

/traf/std/stde191.dgn/stde191.1

VERMONT AGENCY OF TRANSPORTATION

STANDARD E-191

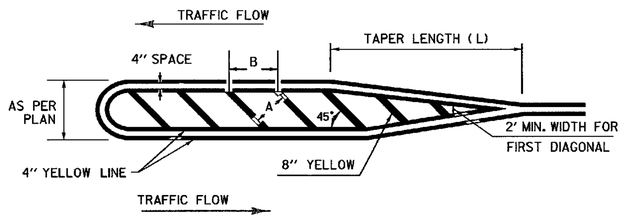

PAINTED ISLAND DETAIL

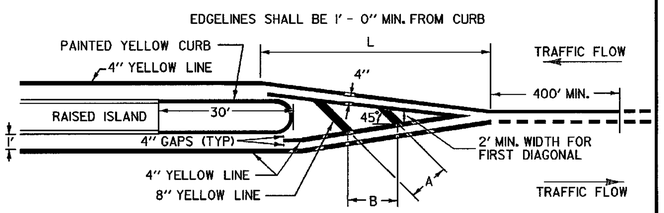

ISLAND APPROACH MARKINGS

DIMENSIONS		CONDITIONS FOR USE	
A	B		
5'	7'	LOW SPEED OR HIGH SPEED/W POOR SIGHT DISTANCE, <200'	WHERE LENGTH OF DIAGONAL AREA IS 75' MAX.
10'	14'	HIGH SPEED AND GOOD SIGHT DISTANCE, ≥200'	WHERE LENGTH OF DIAGONAL AREA EXCEEDS 75'

TAPER LENGTH NOTES

1. FOR DESIGN OF LEFT OR RIGHT TURN LANES REFER TO VTRANS 'GUIDELINE FOR DETERMINING STORAGE, TAPER AND DECELERATION LENGTHS FOR LEFT AND RIGHT-TURN LANES AT INTERSECTIONS'
2. MINIMUM LENGTH OF TAPER = (L) — L = 100 FEET ≤ 30 mph; L = 180 FEET > 30 mph
3. THE ENTIRE TAPER LENGTH MAY BE USED FOR DECELERATION.

NOTE:

A SOLID LINE IN THE DIRECTION OF TRAVEL IS BEGUN AT A LOCATION 400 FEET MIN. IN ADVANCE OF THE BEGIN TAPER FOR THE PAVEMENT WIDTH TRANSITION.

PASSING ZONE SHOWN FOR REFERENCE ONLY, ACTUAL MARKINGS BASED ON FIELD CONDITIONS.

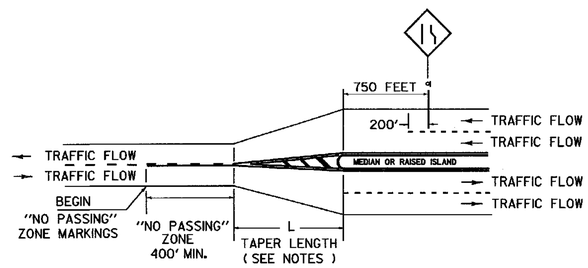

"NO PASSING" ZONE LAYOUT IN PAVEMENT WIDTH TRANSITIONS, TWO LANE HIGHWAY TO DIVIDED HIGHWAY

THE FOLLOWING GUIDELINES WILL BE USED WHEN PAINTING ISLAND ON STATE HIGHWAYS AND RECOMMENDED FOR ISLANDS ON OTHER SYSTEMS WITHIN THE STATE.

I. PAINTING: ISLANDS WHICH ARE FOUR FEET IN WIDTH AND TRIANGLE ISLANDS WHICH ARE LESS THAN FOUR HUNDRED AND FIFTY SQUARE FEET SHALL BE PAINTED ENTIRELY. TRIANGLES WHICH ARE FOUR HUNDRED AND FIFTY SQUARE FEET AND LARGER SHALL BE PAINTED WITH A FOUR FOOT BORDER AS SHOWN ON FIGURE "A" OF THE PAINTED ISLAND DETAIL.

II. SIGNS: ALL APPROACH NOSES TO THE ISLANDS IN THE LINE OF TRAFFIC WILL BE SIGNED WITH A KEEP RIGHT (R-47) SIGN AS WELL AS OBJECT MARKERS PLACED BACK TO BACK TO INDICATE THE BEGINNING (END) OF THE ISLAND.

III. EXCEPTIONS: THERE WILL BE SPECIAL CASES WHICH REQUIRE AN EXCEPTION TO, OR MODIFICATION OF THIS GUIDELINE. THESE QUESTIONS SHOULD BE REFERRED TO THE TRAFFIC DESIGN ENGINEER OR DELEGATED REPRESENTATIVE.

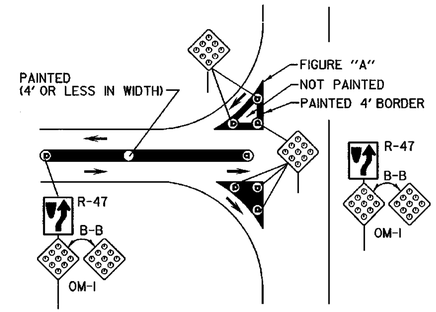

PAINTED ISLANDS

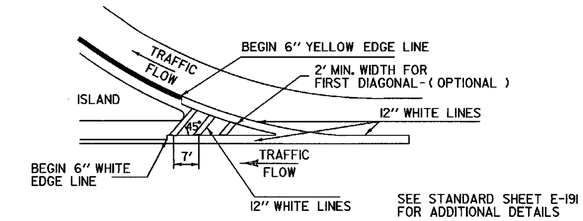

SEE STANDARD SHEET E-191 FOR ADDITIONAL DETAILS

GORE MARKING DETAIL - EXIT

TRANSVERSE LINES

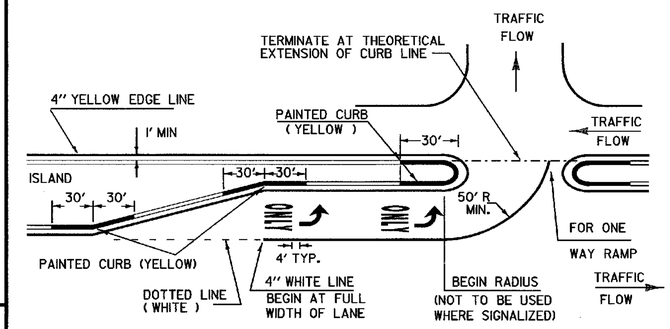

TURN LANE AND PAINTED CURB DETAIL

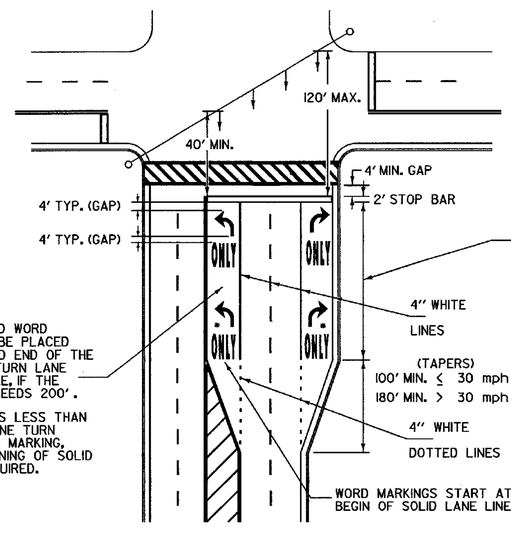

TURN ARROWS AND WORD MARKINGS SHALL BE PLACED AT THE BEGIN AND END OF THE LEFT (OR RIGHT) TURN LANE AND IN THE MIDDLE, IF THE LANE LENGTH EXCEEDS 200'.

* IF LANE LENGTH IS LESS THAN 100 FEET, ONLY ONE TURN ARROW AND WORD MARKING, PLACED AT BEGINNING OF SOLID LANE LINE, IS REQUIRED.

EXCLUSIVE TURN LANES (LEFT OR RIGHT) LANE LINES SHALL BE SOLID AND EXTEND BACK FROM THE STOP LINE TO THE POINT OF FULL LANE WIDTH OF THE TURN LANE.

FOR DESIGN OF LEFT OR RIGHT TURN LANES REFER TO VTRANS 'GUIDELINE FOR DETERMINING STORAGE, TAPER AND DECELERATION LENGTHS FOR LEFT AND RIGHT-TURN LANES AT INTERSECTIONS'

TYPICAL MARKINGS FOR SIGNALIZED INTERSECTION

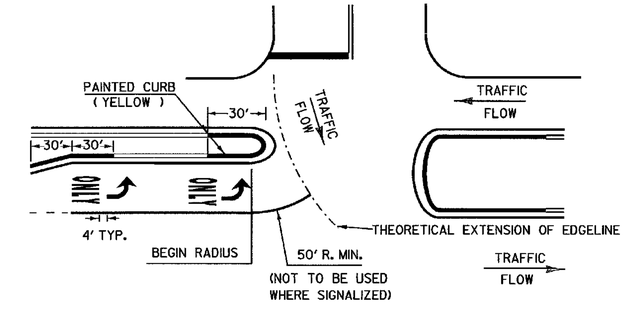

CURB PAINTING: CURB SHALL BE PAINTED ON THE ISLAND NOSE AND TO A POINT 30 FEET FROM THE END OF THE ISLAND. IN ADDITION, CURB SHALL BE PAINTED 30 FEET FROM ANY CHANGE IN CURB DIRECTION.

THIS SHEET NOT TO SCALE

OTHER STDS. REQUIRED E-191 E-193

REVISIONS AND CORRECTIONS

AUG. 18, 1995 - DATE OF ORIGINAL ISSUE
OCT. 14, 1998 - CHANGED GORE MARKING DETAIL
DEC. 28, 1998 - CHANGED GORE MARKING HATCHING TO 12" PER FHWA
OCT. 12, 2000 - CHANGED TURN LANE CRITERIA

APPROVED

DIRECTOR OF PROJECT DEVELOPMENT

ROADWAY & TRAFFIC DESIGN ENGINEER

PAVEMENT MARKING DETAILS

/traf/english/std/e192.dgn

VERMONT AGENCY OF TRANSPORTATION

STANDARD E-192

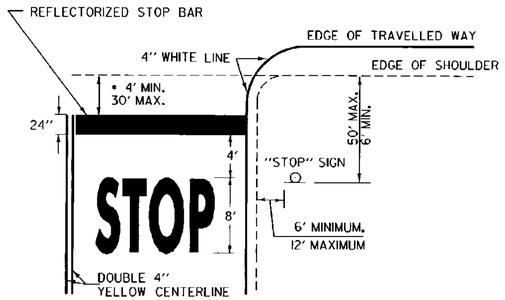

* THE "DESIRED STOPPING POINT" IS THE LOCATION BASED ON SITE CONDITIONS THAT BEST ALLOWS THE STOPPED VEHICLE TO VIEW THE APPROACHING TRAFFIC.

STOP BAR LAYOUT

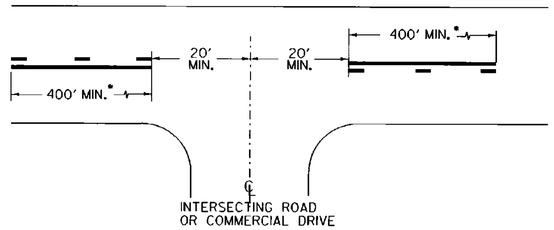

* THE SOLID LINE SHALL BE PAIRED WITH EITHER A SOLID OR DASHED LINE DEPENDING ON SIGHT DISTANCE AVAILABILITY IN THE OPPOSING DIRECTION. ADJUSTMENTS TO THE 40 FOOT CENTERLINE OPENING MAY BE MADE TO ACCOMMODATE SKEWED INTERSECTIONS.

CENTERLINE BREAKES:

A. AT ALL STATE HIGHWAYS AND TOWN HIGHWAYS, INCLUDING CLASS 4 TH'S. THAT HAVE STOP AND LEGAL LOAD LIMIT SIGNS INSTALLED

B. COMMERCIAL DRIVES:
1. WHERE A SEPERATE TURN LANE EXISTS ON THE MAIN LINE (LT. OR RT.)
2. SIGNIFICANT TRAFFIC VOLUMES EXISTS.
3. IF MOTORISTS NEED ASSISTANCE TO DEFINE ENTRANCE POINTS.

CENTERLINE LAYOUT

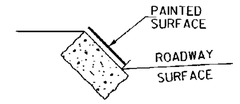

GRANITE SLOPE EDGING

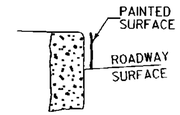

VERTICAL GRANITE CURB

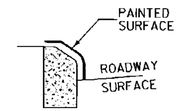

TYPE A (CONCRETE)

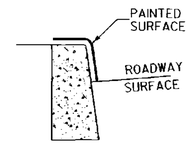

TYPE B (CONCRETE)

PAINTED CURB

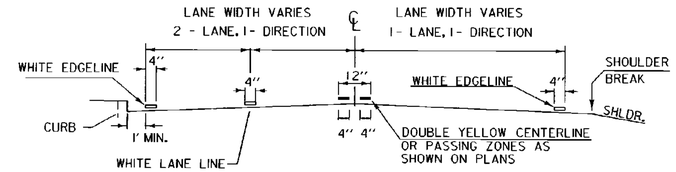

PAVEMENT MARKING PLACEMENT DETAIL

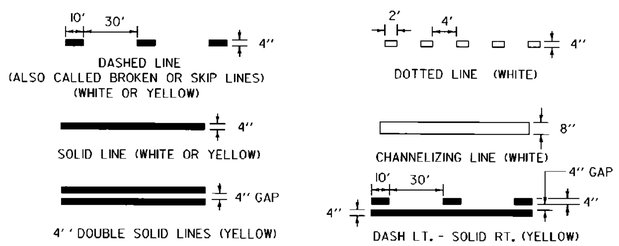

PAVEMENT MARKING LINE DETAILS

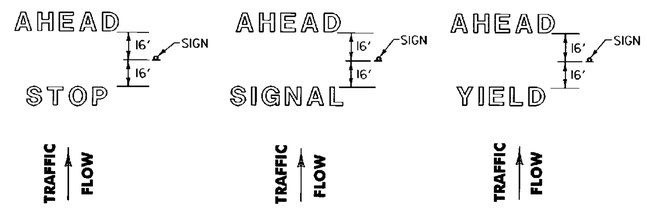

LETTER IN WORD MARKING SPACING DETAIL

NOTE: SINGLE WORDS CENTERED ON SIGN ie: SCHOOL OR YIELD

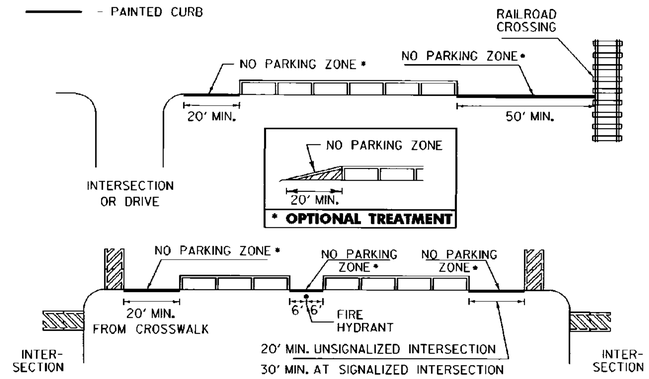

NO PARKING LAYOUT DETAILS

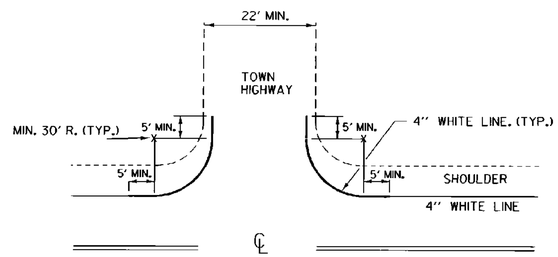

EDGELINES SHALL BE APPLIED TO ALL STATE HIGHWAYS AND SHOULD BE MAINTAINED AT A CONSTANT DISTANCE FROM THE CENTERLINE UNLESS PAVEMENT WIDTH INCREASES TO ALLOW WIDER LANES.

APPLY EDGELINE AS DETAILED ON ALL PAVED CLASS 1 & CLASS 2 TOWN HIGHWAYS AND ANY CLASS 3 TOWN HIGHWAY 22 FEET OR MORE IN WIDTH.

IF MIN. 30 FOOT RADIUS CANNOT BE OBTAINED, OR THE TOWN HIGHWAY IS NOT PAVED, BREAK THE EDGELINE USING AN 80 FOOT GAP AT INTERSECTION.

EDGELINE LAYOUTS

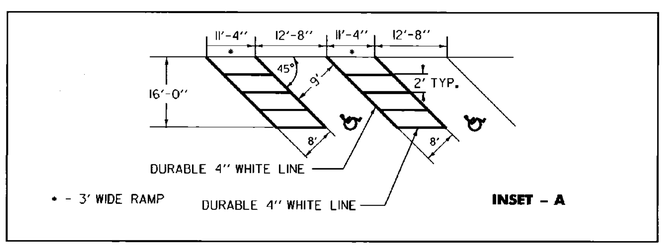

NOTE:

SEE STANDARD SHEET E-191 FOR HANDICAP SYMBOL POSITIONING AND DETAIL.

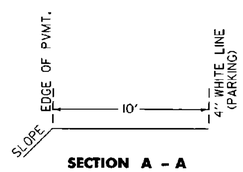

SECTION A - A

TRUCK PARKING DETAIL

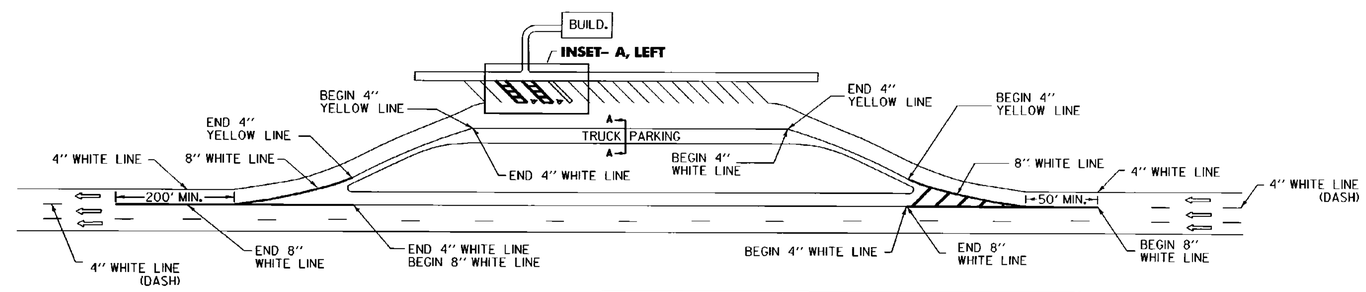

REST AREA PARKING DETAILS

THIS SHEET IS NOT TO SCALE

OTHER STDS. E - 191, E - 192 REQUIRED

REVISIONS AND CORRECTIONS

AUG. 18, 1995 - DATE OF ORIGINAL ISSUE

APPROVED FOR THIS PROJECT AND/OR DESIGN IMPLEMENTATION. FHWA FINAL APPROVAL PENDING.

APPROVED

DIRECTOR OF ENGINEERING

TRAFFIC AND SAFETY ENGINEER

PAVEMENT MARKING DETAILS

/traf/std/stdel93.dgn/stdel93.1

VERMONT AGENCY OF TRANSPORTATION

STANDARD

E-193

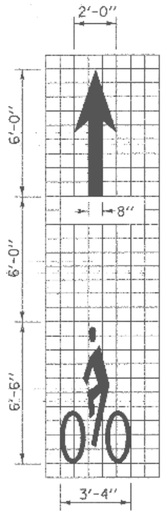

BICYCLE STENCIL PAVEMENT MARKING

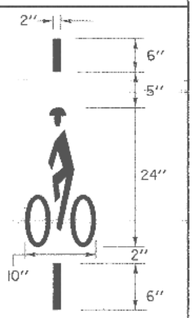

NOTE:
IF THE BICYCLE DETECTOR PAVEMENT MARKING IS USED, IT SHALL BE PLACED IN THE AREA OF HIGHEST SENSITIVITY OF VEHICLE DETECTOR LOOPS IN OUTSIDE TRAVEL LANES OR WHEN DETECTOR LOOPS ARE PLACED IN BICYCLE LANES. WHEN PAVEMENT MARKING IS USED, AN R10-22 SIGN SHALL BE INSTALLED.

BICYCLE DETECTOR PAVEMENT MARKING

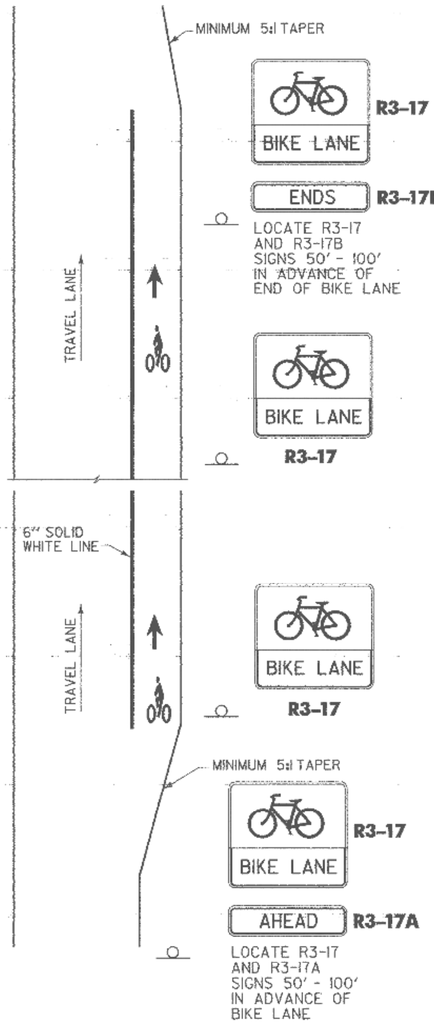

BICYCLE LANE PAVEMENT MARKINGS

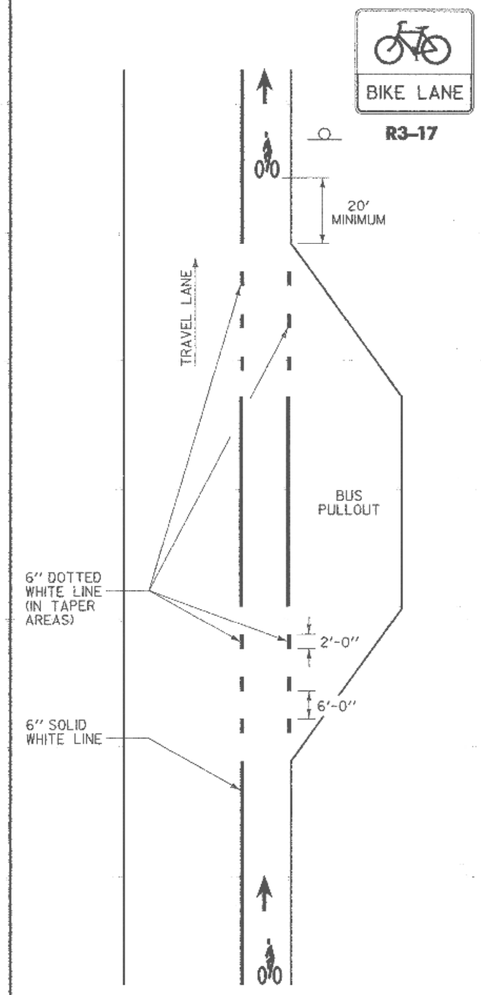

BUS PULLOUT WITH BICYCLE LANE PAVEMENT MARKINGS

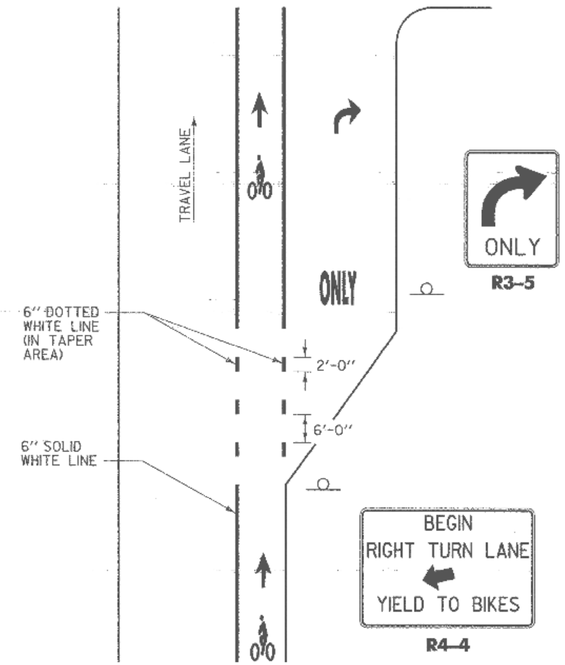

NOTE:
REFER TO VAOT STANDARD DRAWING E-192 FOR DETAILS ON PAVEMENTS MARKINGS FOR TURNING LANES.

BIKE LANE/RIGHT TURN LANE PAVEMENT MARKINGS

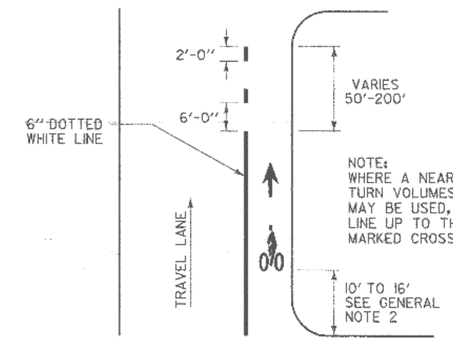

NOTE:
WHERE A NEAR SIDE BUS STOP, OR HEAVY RIGHT TURN VOLUMES ARE PRESENT, A DOTTED LINE MAY BE USED. OTHERWISE MAINTAIN A SOLID LINE UP TO THE INTERSECTION, STOP BAR OR MARKED CROSSWALK

OPTIONAL BIKE LANE PAVEMENT MARKINGS WITH BUS STOPS OR HEAVY RIGHT TURN VOLUMES

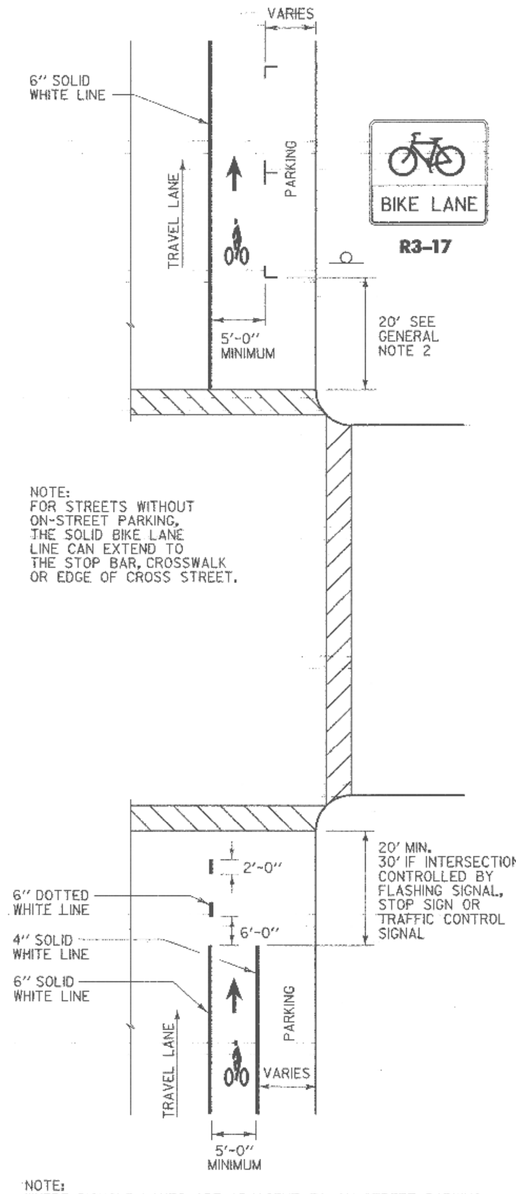

NOTE:
FOR STREETS WITHOUT ON-STREET PARKING, THE SOLID BIKE LANE LINE CAN EXTEND TO THE STOP BAR, CROSSWALK OR EDGE OF CROSS STREET.

NOTE:
WHERE BICYCLE LANES ARE ADJACENT TO ON-STREET PARKING, A BICYCLE LANE WIDTH OF AT LEAST 5'-0" IS RECOMMENDED.

BIKE LANE PAVEMENT MARKINGS AT INTERSECTION WITH ON STREET PARKING

GENERAL NOTES

1. ALL BICYCLE LANE PAVEMENT MARKINGS TO BE WHITE RETROREFLECTORIZED PAINT OR MAXIMUM 90 MIL THICK SLIP RESISTANT DURABLE MARKINGS.
2. ADJUST LOCATION OF BICYCLE LANE PAVEMENT MARKING TO AVOID PLACEMENT WHERE IT IS LIKELY TO BE TRAVERSED BY VEHICLES, SUCH AS AT DRIVEWAYS.
3. REFER TO VAOT PEDESTRIAN AND BICYCLE FACILITY PLANNING AND DESIGN MANUAL FOR GUIDANCE ON OTHER BIKE LANE CONFIGURATIONS.
4. PLACE BICYCLE STENCIL PAVEMENT MARKINGS AFTER STREET INTERSECTIONS AND AT INTERMEDIATE LOCATIONS ON LONG UNINTERRUPTED SECTIONS.

OTHER STDS. REQ'D:
E-143B, E-172, E-192

THIS SHEET IS NOT TO SCALE

REVISIONS AND CORRECTIONS

FEB. 06, 2004	DATE OF ORIGINAL ISSUE
MAR. 15, 2005	REVISED SIGNS AND ADDED BICYCLE DETECTOR PAVEMENT MARKING

APPROVED

DIRECTOR OF PROGRAM DEVELOPMENT

LOCAL TRANSPORTATION FACILITIES PROGRAM MANAGER

FEDERAL HIGHWAY ADMINISTRATION

BICYCLE PAVEMENT MARKINGS AND SIGN LAYOUT

VERMONT AGENCY OF TRANSPORTATION

STANDARD E-194

Pedestrian Zone Details

DETAIL A — RESIDENTIAL DRIVE

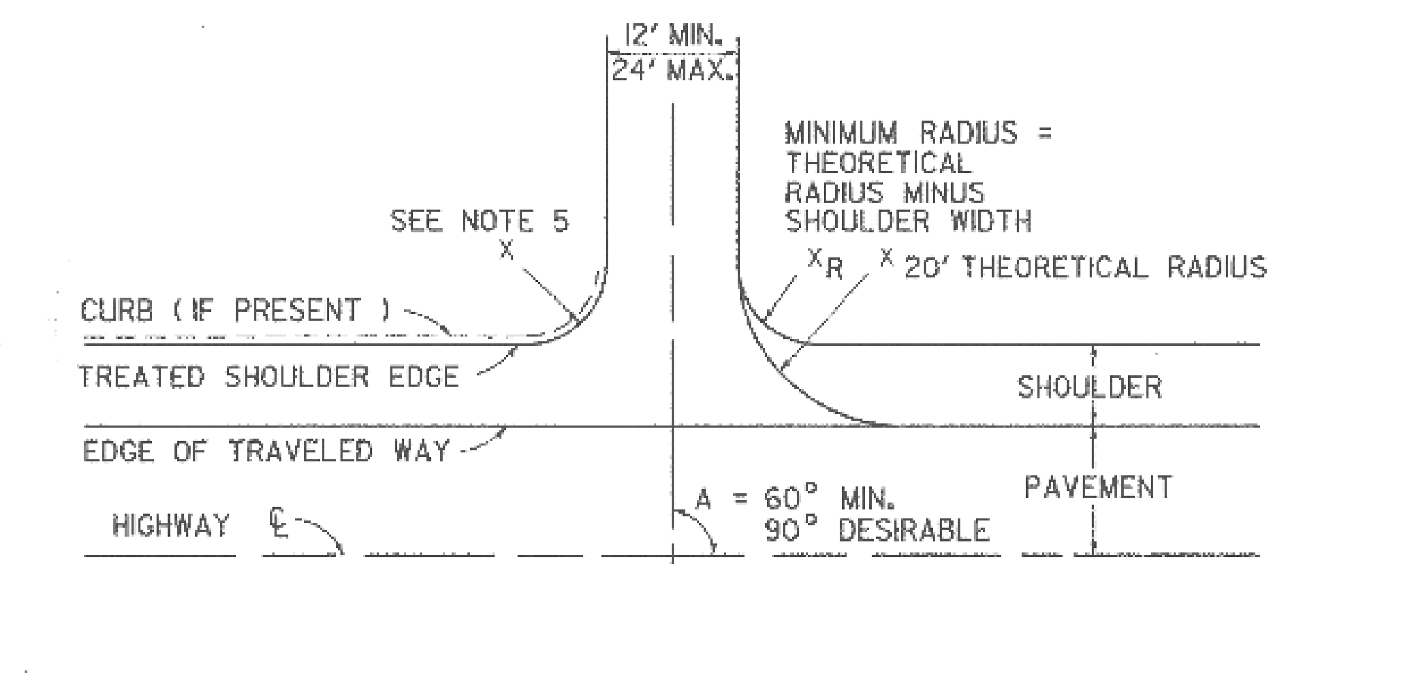

DETAIL B — DUAL COMMERCIAL DRIVE TO BE USED ONLY UNDER SPECIAL CONDITIONS

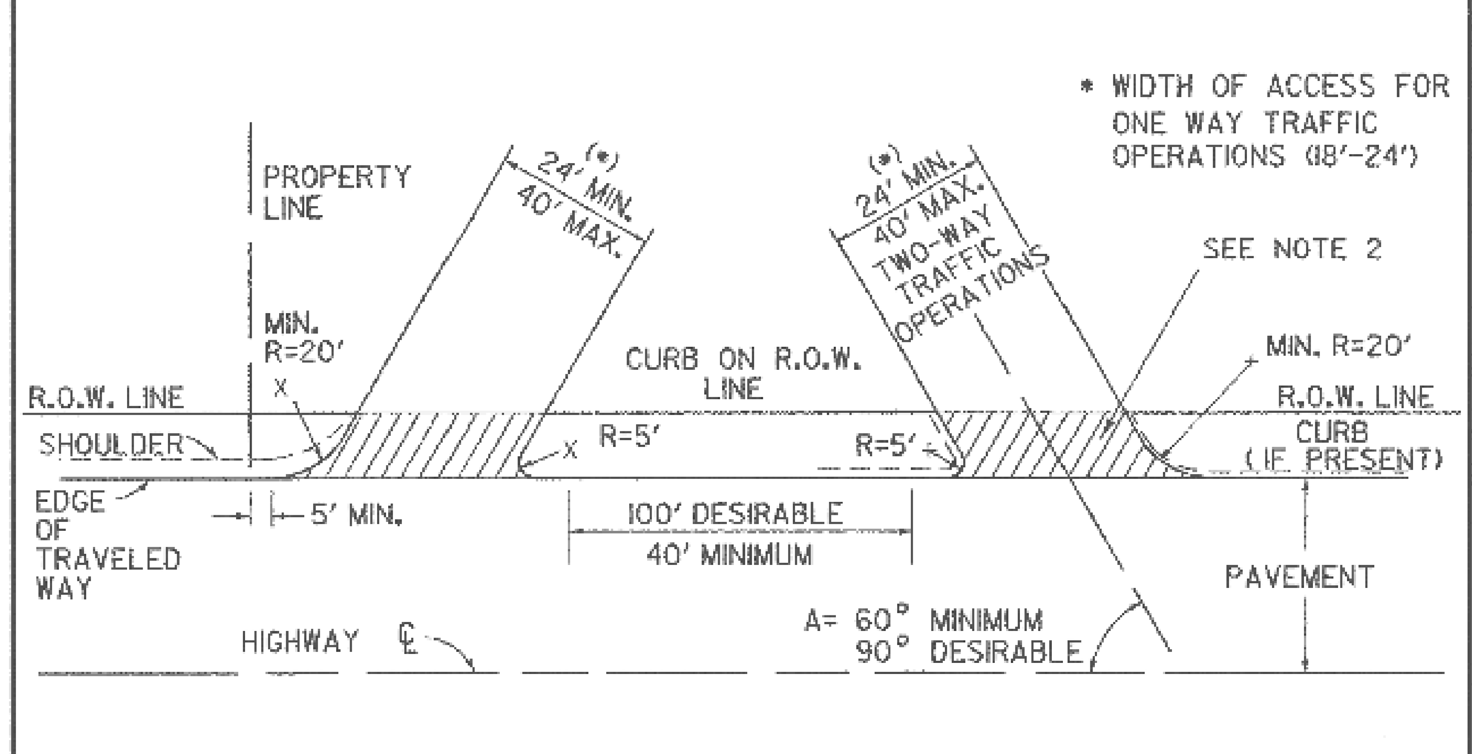

DETAIL C — TWO-WAY UNDIVIDED COMMERCIAL DRIVE FOR SINGLE STORES, BUSINESSES, SMALL HOUSING DEVELOPMENTS

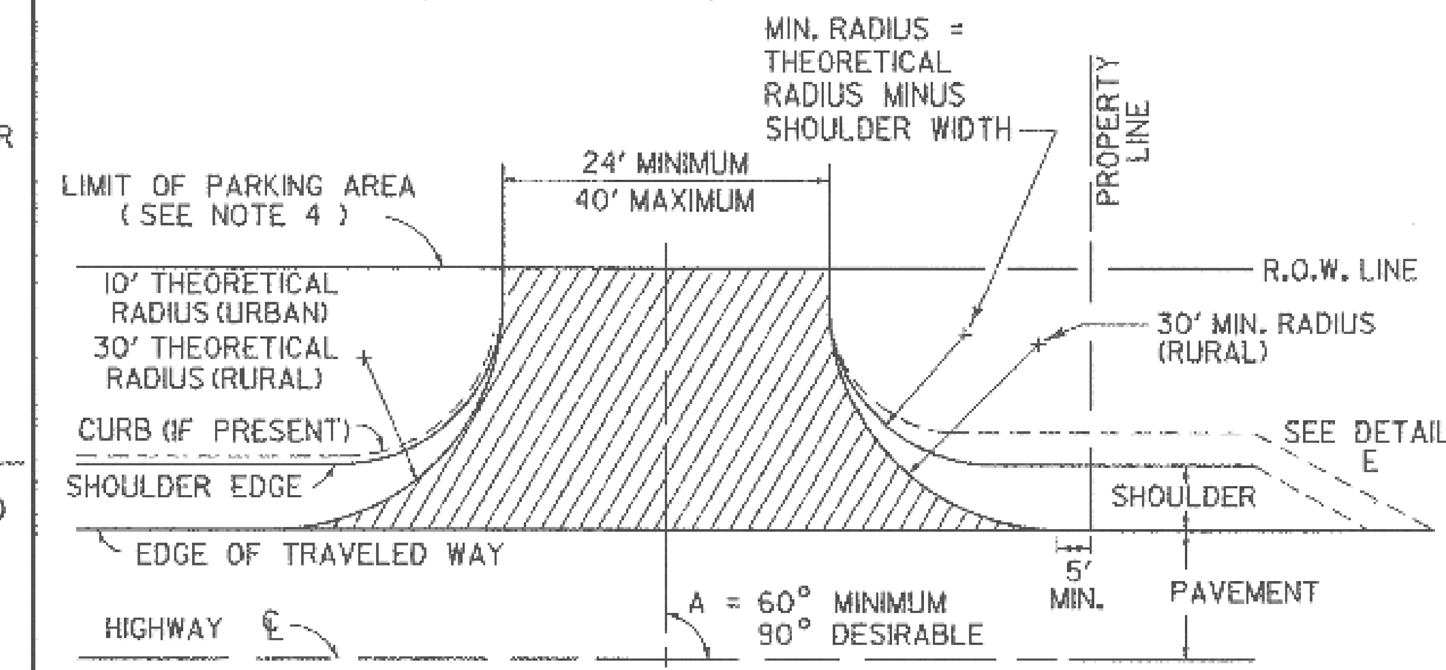

THIS DETAIL WILL ALSO APPLY TO COMMERCIAL SERVICE DRIVES, WHEN AUTHORIZED, HAVING A MAXIMUM WIDTH OF 20'. THE SERVICE DRIVE WILL HAVE A "SERVICE VEHICLES ONLY" SIGN PLACED AT THE HIGHWAY ROW LINE. SIGN SHALL BE 18"X 24" AS PRESCRIBED IN THE "STANDARD HIGHWAY SIGNS BOOK", A SUPPLEMENTAL PUBLICATION TO MUTCD.

DETAIL D — TWO-WAY COMMERCIAL DRIVE WITH DIVISIONAL ISLAND FOR SHOPPING CENTERS, LARGE HOUSING DEVELOPMENTS, INDUSTRIAL PLANTS AND SERVICE STATIONS

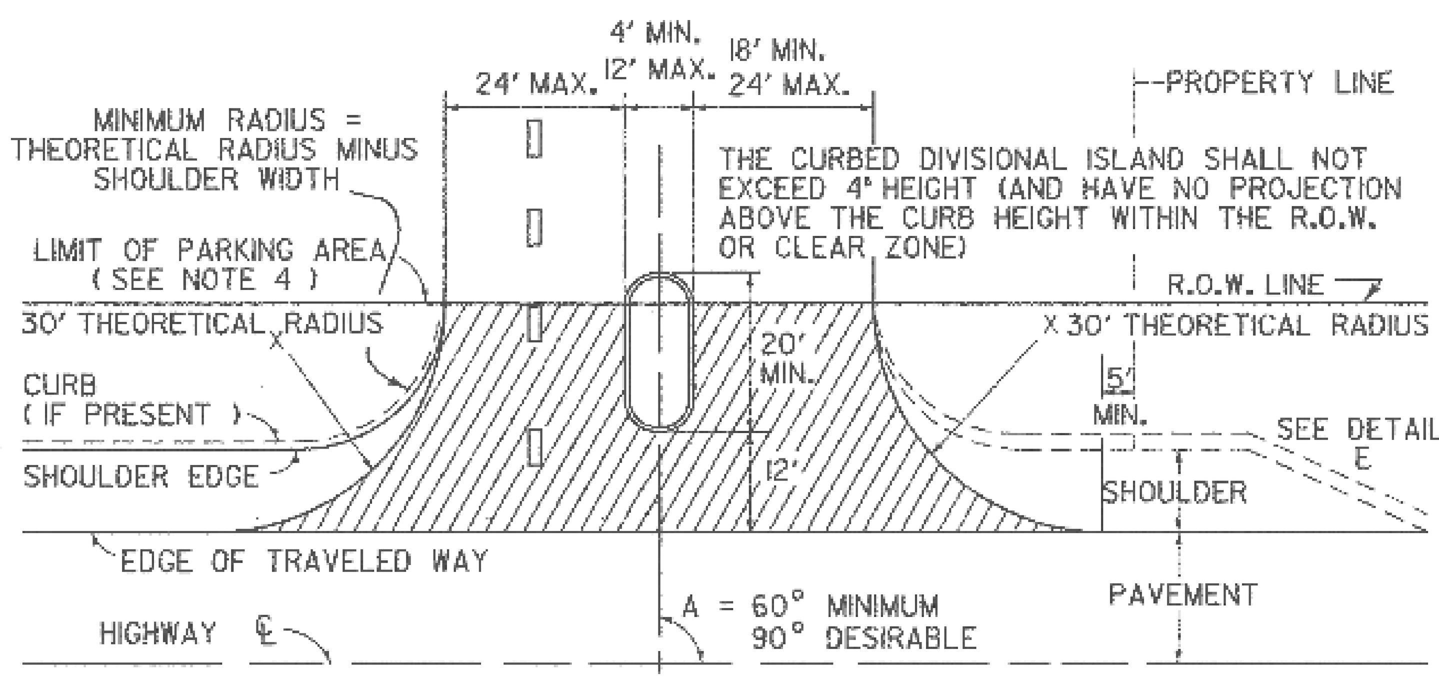

DETAIL E — RIGHT TURN LANE FOR COMMERCIAL DRIVE (UNSIGNALIZED INTERSECTIONS ONLY)

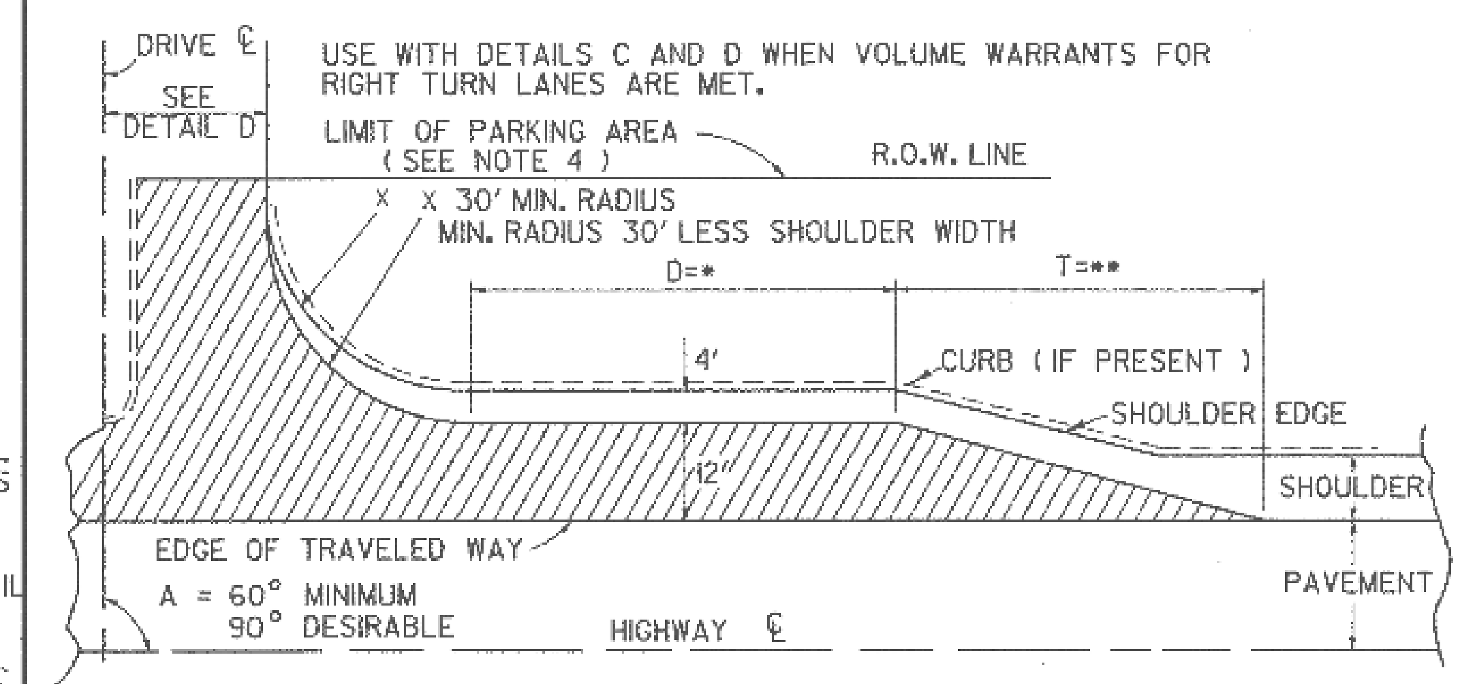

* STORAGE LENGTH IS VARIABLE DEPENDING ON TRAFFIC VOLUME AND MUST BE ADJUSTED TO PROVIDE PROPER DECELERATION LENGTH. REFER TO VAOT STANDARD E-192

TAPERS

SPEED (MPH)	30	35	40	50
**LENGTH (MIN)(FT)(T)	100	120	140	180
RATE	8:1	10:1	12:1	15:1

DETAIL F — MINIMUM HORIZONTAL SEPARATION BETWEEN DRIVEWAYS AND INTERSECTING SIDEROADS

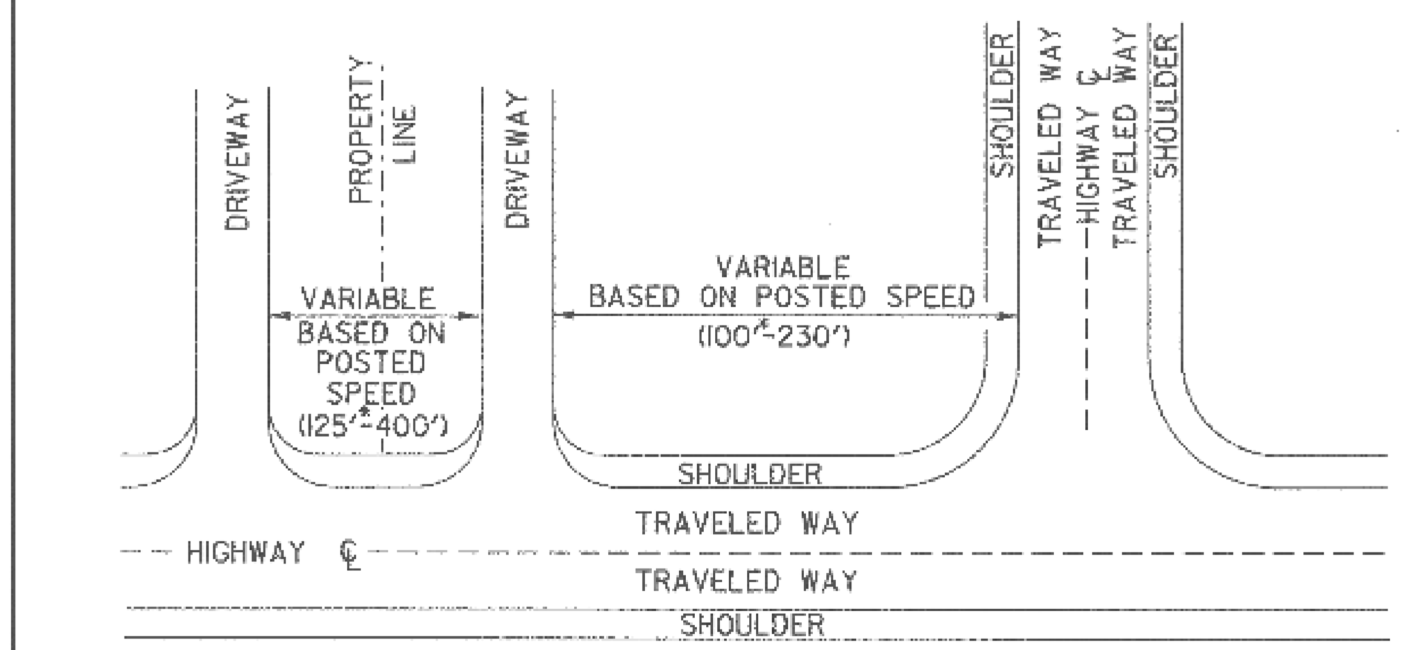

* MINIMUM UNLESS NO OTHER REASONABLE ACCESS IS AVAILABLE AND PRIOR APPROVAL IS GRANTED BY THE VAOT ITEMS SUCH AS TRAFFIC SIGNALS, HIGH TRAFFIC VOLUMES, OR FUNCTIONAL CLASS OF HIGHWAY SHOULD BE CONSIDERED WHEN DETERMINING APPROPRIATE SEPARATION DISTANCE. WHEN CURRENT RECOMMENDED SEPARATION DISTANCE CANNOT BE OBTAINED RESTRICTION OF TURNING MOVEMENTS MAY BE REQUIRED.

DETAIL G — PERSPECTIVE SKETCH OF DRIVE INTERSECTION SHOWING DEPRESSION

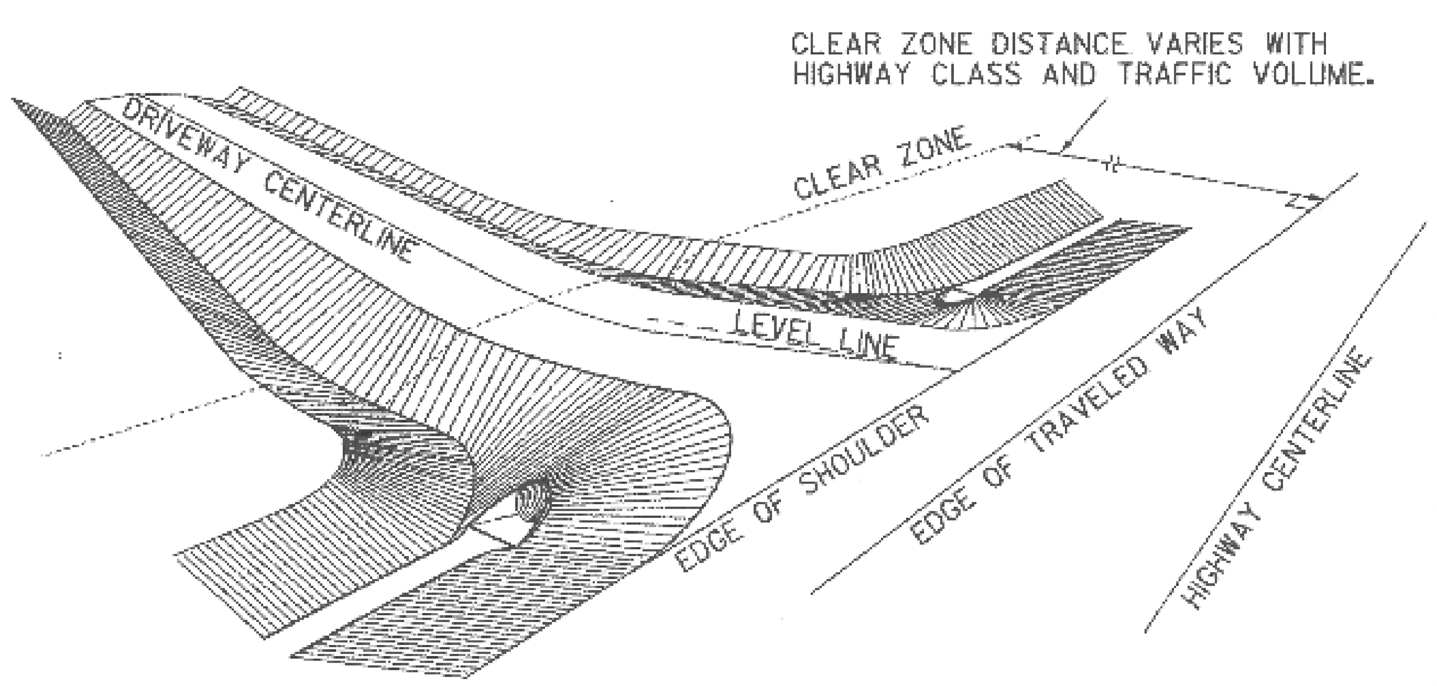

DETAIL H — PROFILE OF DRIVE INTERSECTION SHOWING 5" DEPRESSION (CUT SECTION)

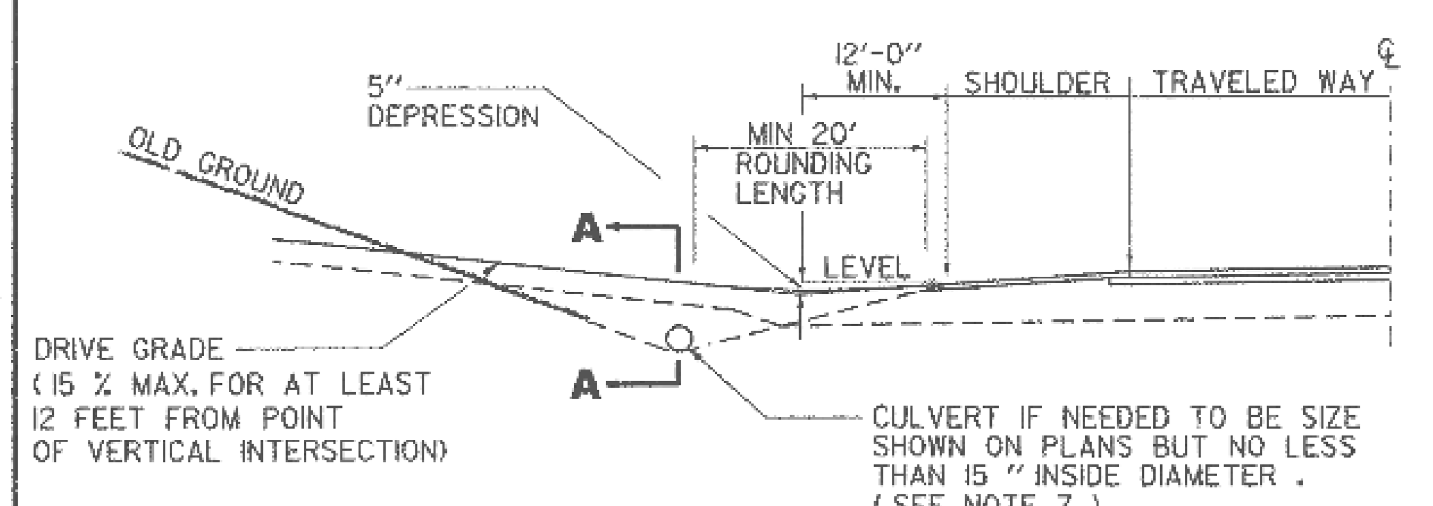

DETAIL I — PROFILE OF DRIVE INTERSECTION (FILL SECTION)

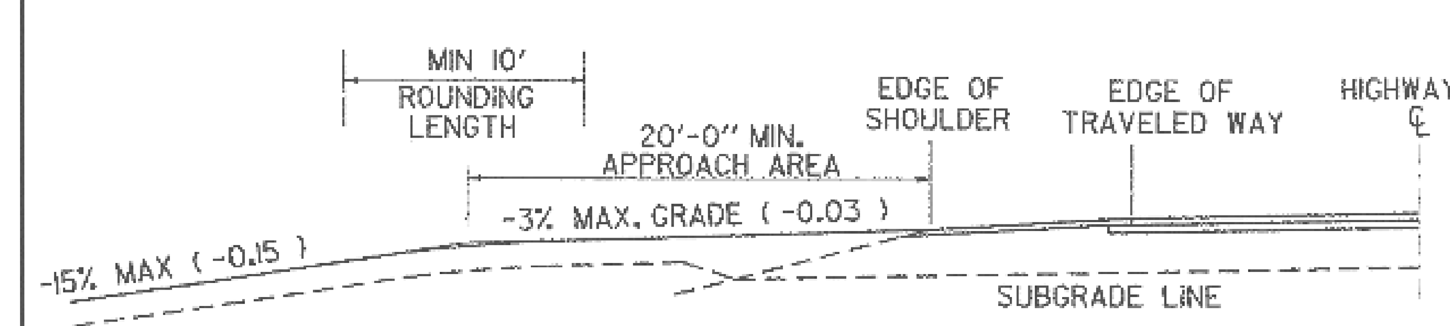

DETAIL J

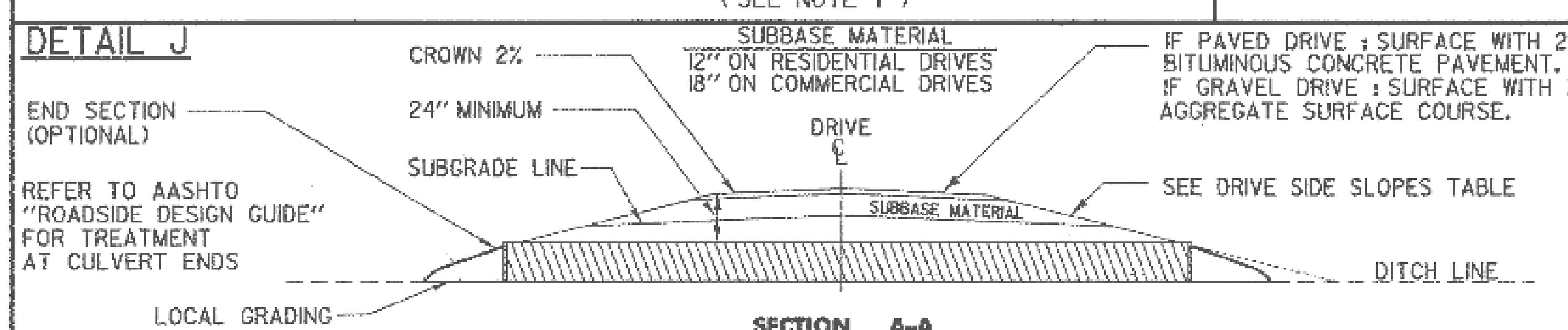

DRIVE SIDE SLOPES

LOCATION OF SLOPE	SLOPE RATE
V > 40 MPH	1:6 OR FLATTER
URBAN AREAS, OR V ≤ 40 MPH	1:4 DESIRABLE 1:2 ALLOWABLE
OUTSIDE CLEAR ZONE	1:2 OR FLATTER

NOTES:

1. THIS SHEET IS INTENDED FOR USE BY DESIGNERS ON HIGHWAY PROJECTS AND IN CONJUNCTION WITH A PERMIT FOR WORK WITHIN HIGHWAY RIGHTS OF WAY (FORM TA 210). ALL CONSTRUCTION REQUIRED BY THE PERMIT AND INDICATED ON THIS SHEET SHALL BE THE RESPONSIBILITY OF THE APPLICANT AND IS SUBJECT TO THE APPROVAL OF THE VT. AGENCY OF TRANSPORTATION. WHEN USED WITH THE PLANS FOR A HIGHWAY CONSTRUCTION PROJECT. THIS SHEET IS INTENDED TO BE A GUIDE FOR THE DESIGNER CONCERNING DRIVE WIDTHS, HORIZONTAL, VERTICAL AND GEOMETRIC CHARACTERISTICS.
2. ALL COMMERCIAL DRIVES SHALL BE PAVED FROM THE EDGE OF THE TRAVELED WAY TO THE HIGHWAY RIGHT-OF-WAY, TO THE FARTHEST POINT OF CURVATURE ON THE DRIVEWAY EDGE OR AS DIRECTED BY THE DISTRICT TRANSPORTATION ADMINISTRATOR. THIS PAVING IS INDICATED IN DETAILS (B THRU E) BY HATCHING.
3. DEPTH OF SUBBASE AND PAVEMENT TO BE THE SAME AS HIGHWAY OR AS SHOWN IN DETAIL J WITHIN THE LIMITS OF THE HIGHWAY RIGHT-OF-WAY.
4. VEHICULAR ACCESS FROM PARKING AREAS TO THE RIGHT-OF-WAY AT OTHER THAN APPROVED ACCESS POINTS WILL BE PREVENTED BY THE CONSTRUCTION OF CURBING OR OTHER SUITABLE PHYSICAL BARRIER.
5. IF CURB IS PRESENT, SEE APPROPRIATE CURB DETAIL STANDARD OR MATCH TOWN/CITY STANDARD CURB TREATMENT.
6. WHERE TRAFFIC VOLUME FOR A PROJECT IS SUBSTANTIAL THE AGENCY MAY REQUIRE SPECIAL LANES FOR TURNING, SIGNALS OR OTHER MODIFICATIONS. BASED ON TRAFFIC STUDIES THE AGENCY WILL DETERMINE SPECIFIC TREATMENT TO BE USED. ON DEVELOPER PROJECTS THE AGENCY WILL WORK WITH THE APPLICANT TO IMPLEMENT CHANGES TO THE STATE HIGHWAY.
7. CIRCULAR DRAINAGE CULVERTS UNDER DRIVES SHALL HAVE A MINIMUM INSIDE DIAMETER (I.D.) OF 15". PIPE ARCHES USED UNDER DRIVES SHALL HAVE A MINIMUM INSIDE CROSS-SECTIONAL AREA EQUIVALENT TO THAT PROVIDED BY A 15" CIRCULAR PIPE.
8. THE OFFSET BETWEEN THE PROPERTY LINE AND THE EDGE OF THE DRIVEWAY MAY BE GOVERNED BY LOCAL ZONING LAWS. DRIVEWAY WIDTH RESTRICTIONS SHOWN PERTAIN ONLY TO THE AREA WITHIN THE HIGHWAY R.O.W. OR THE END OF THE TURNING RADIUS WHICHEVER IS GREATEST.
9. DRIVEWAY GRADES STEEPER THAN THOSE SHOWN MAY BE ALLOWED AS LONG AS A 20' APPROACH AREA IS ACHIEVED FOR THE VEHICLE TO PAUSE BEFORE ENTERING THE HIGHWAY. (WHERE CURB & SIDEWALKS EXIST, SEE STANDARDS C-2A & C-2B)
10. INTERSECTION SIGHT DISTANCES, EQUAL TO OR GREATER THAN THOSE SHOWN BELOW, SHOULD BE PROVIDED IN BOTH DIRECTIONS FOR ALL DRIVES ENTERING ON PUBLIC HIGHWAYS, UNLESS OTHERWISE APPROVED BY THE AGENCY OF TRANSPORTATION. INTERSECTION SIGHT DISTANCE IS MEASURED FROM A POINT ON THE DRIVE AT LEAST 15 FEET FROM THE EDGE OF TRAVELED WAY OF THE ADJACENT ROADWAY AND MEASURED FROM A HEIGHT OF EYE OF 3.5 FEET ON THE DRIVE TO A HEIGHT OF 3.50 FEET ON THE ROADWAY.

SIGHT DISTANCE CHART

POSTED SPEED OR DESIGN SPEED (M.P.H.)	MINIMUM STOPPING SIGHT DISTANCE (FT)	MINIMUM INTERSECTION SIGHT DISTANCE * (FT)
25	155	280
30	200	335
35	250	390
40	305	445
45	360	500
50	425	555
55	495	610
60	570	665
65	645	720

THE ABOVE VALUES ARE TAKEN FROM THE 2004 AASHTO "A POLICY ON GEOMETRIC DESIGN OF HIGHWAYS & STREETS."

NOTE : ADVANCE WARNING SIGNS WILL BE REQUIRED IF OBTAINABLE INTERSECTION SIGHT DISTANCES ARE BELOW MINIMUM STOPPING SIGHT DISTANCES.

THE CHART IS ENTERED TO SELECT DESIGN VALUES BASED ON THE POSTED SPEED LIMIT IN MPH. VALUES FOR DESIGN ARE CALCULATED BASED ON THE DESIGN SPEED IN MPH.

* ASSUMES A GAP OF 7.5 SECONDS IN THE TRAFFIC STREAM ON THE HIGHWAY MAINLINE BASED ON THE HIGHWAY DESIGN SPEED IN MPH. THIS ALLOWS A STOPPED PASSENGER VEHICLE TO ENTER THE MAINLINE FROM THE DRIVE WITHOUT UNDULY INTERFERING WITH THE HIGHWAY OPERATIONS.

REVISIONS AND CORRECTIONS

- DEC. 11, 1992 - THIS STANDARD SUPERCEDES B-71 (7/23/80R), B-71A (3/12/90), AND B-13 (12/14/71).
- JUNE 1, 1994 - REISSUED, WITHOUT CHANGE, UNDER NEW SIGNATURES.
- MAR. 10, 1995 - REISSUED, WITHOUT CHANGE, UNDER NEW SIGNATURES.
- NOV. 16, 2000 - CHANGES MADE TO CONFORM WITH LANGUAGE AND DIMENSIONS IN ACCESS MANAGEMENT PROGRAM GUIDELINES.
- FEB 1, 2004 - CHANGES MADE TO SIGHT DISTANCE CHART TO CONFORM WITH NEWEST AASHTO CRITERIA.
- JULY 8, 2005 - CHANGE MADE TO OBJECT HEIGHT TO CONFORM WITH NEWEST AASHTO CRITERIA

APPROVED

Richard [signature] — DIRECTOR OF PROGRAM DEVELOPMENT

Craig S. Keller — CHIEF OF UTILITIES AND PERMITS

Michael [signature] — FEDERAL HIGHWAY ADMINISTRATION

STANDARDS FOR RESIDENTIAL AND COMMERCIAL DRIVES

VERMONT AGENCY OF TRANSPORTATION

STANDARD B-71

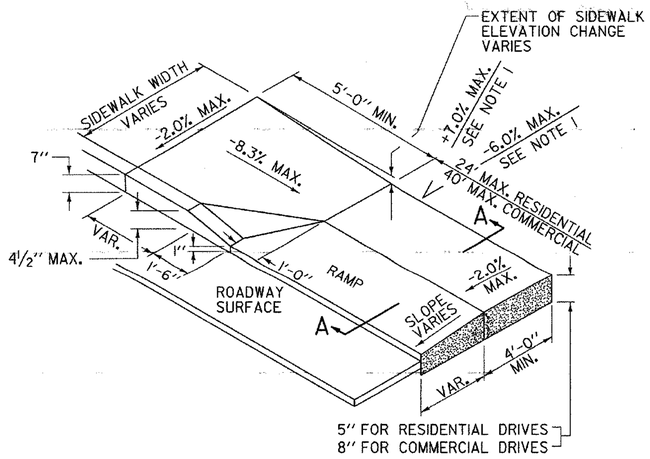

TYPE 1 – COMBINATION CROSSING WITH FLARE

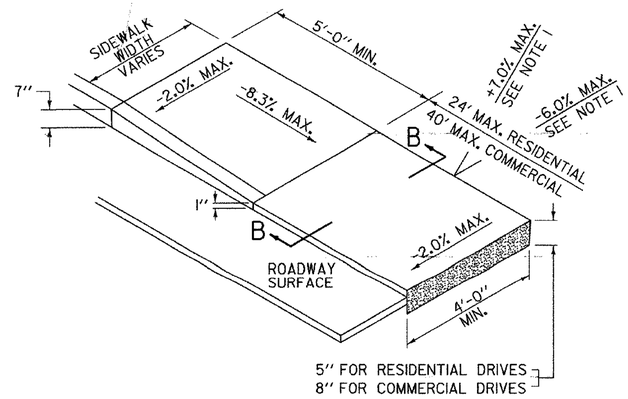

TYPE 2 – PARALLEL CROSSING WITH LANDING

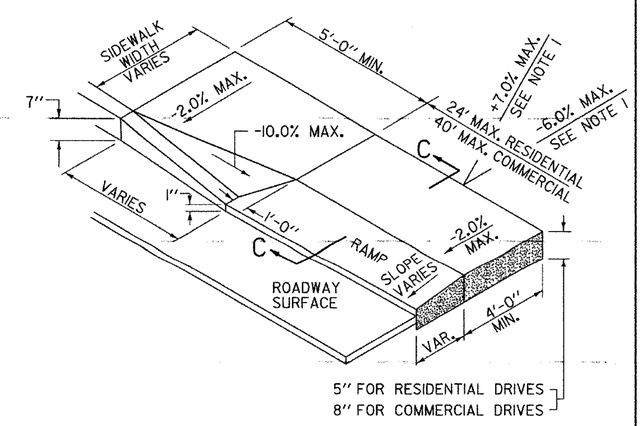

TYPE 3 – LEVEL LANDING WITH FLARE

GENERAL NOTES :

1. THESE TYPICALS APPLY WHERE GRADE OF DRIVE IS BETWEEN -6.0% AND +7.0%. FOR GRADES IN EXCESS OF THESE, ALTERNATIVE CROSS SECTION OF RAMP AND SIDEWALK MAY BE APPROVED BY THE ENGINEER.
2. DUMMY JOINTS SHALL BE PROVIDED AT TRANSITIONS (GRADE CHANGES) OF RAMPS AND FLARES.
3. DRIVEWAY RAMPS TO BE PAID FOR AS PORTLAND CEMENT CONCRETE SIDEWALK.
4. SIDEWALKS THAT ARE LESS THAN 5' WIDE REQUIRE 5' WIDE BY 5' LONG PASSING AREAS (NO GREATER THAN 2.0% CROSS SLOPE) AT INTERVALS NOT TO EXCEED 200'. DRIVEWAYS MEETING THESE REQUIREMENTS MAY BE USED AS A WHEELCHAIR PASSING AREA.
5. IN NO CASE SHALL THE CROSS SLOPE OF AN ACCESSIBLE ROUTE EXCEED 2.0%.

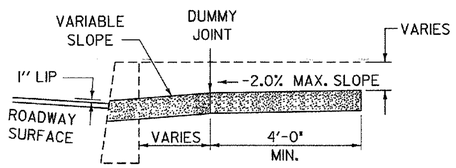

SECTION A – A

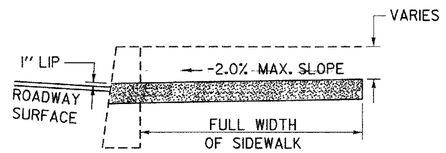

SECTION B – B

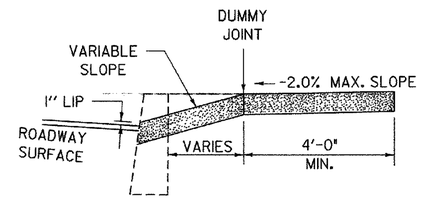

SECTION C – C

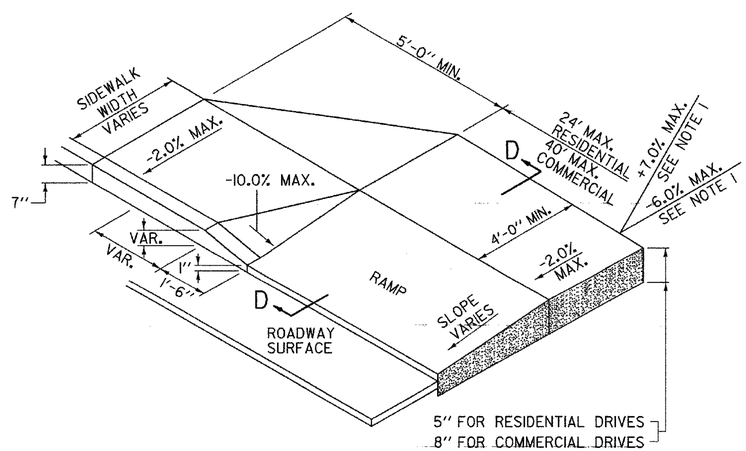

TYPE 4 – JOGGED CROSSING

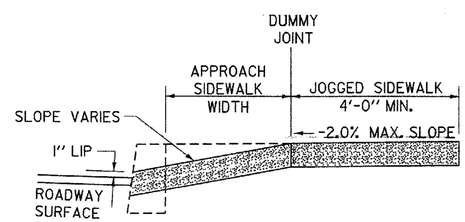

SECTION D–D

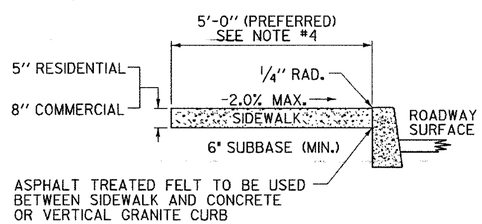

PORTLAND CEMENT CONCRETE SIDEWALK

OTHER STANDARDS REQUIRED: B-71

REVISIONS AND CORRECTIONS

DEC. 14, 1971 - ORIGINAL APPROVAL DATE

OCT. 25, 1985 - REVISED TO CONFORM TO 1986 SPECIFICATIONS

JUNE 1, 1994 - REISSUED WITHOUT CHANGE, UNDER NEW SIGNATURES.

JAN. 3, 2000 - UPDATED TO REFLECT METRIC STD. CHANGES.

OCT. 14, 2005 - UPDATED TO REFLECT REVISED ADAAG STANDARDS

APPROVED

Asst DIRECTOR OF PROGRAM DEVELOPMENT

ROADWAY PROGRAM MANAGER

FEDERAL HIGHWAY ADMINISTRATION

PORTLAND CEMENT CONCRETE SIDEWALK DRIVE ENTRANCES WITH SIDEWALK ADJACENT TO CURB

VERMONT AGENCY OF TRANSPORTATION

STANDARD

C-2A

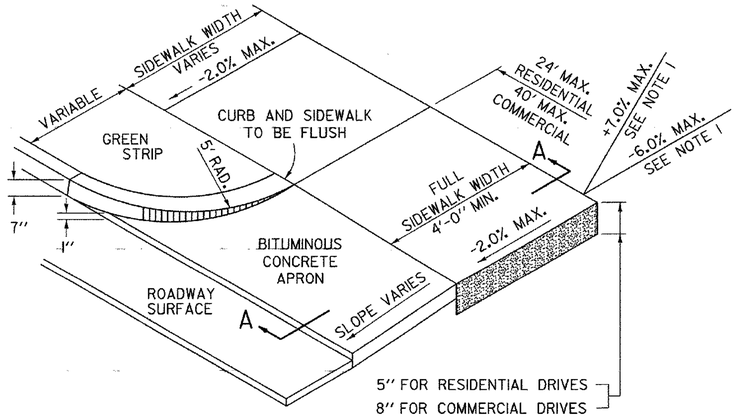

TYPE 5 - LEVEL LANDING WITH RETURN RADIUS

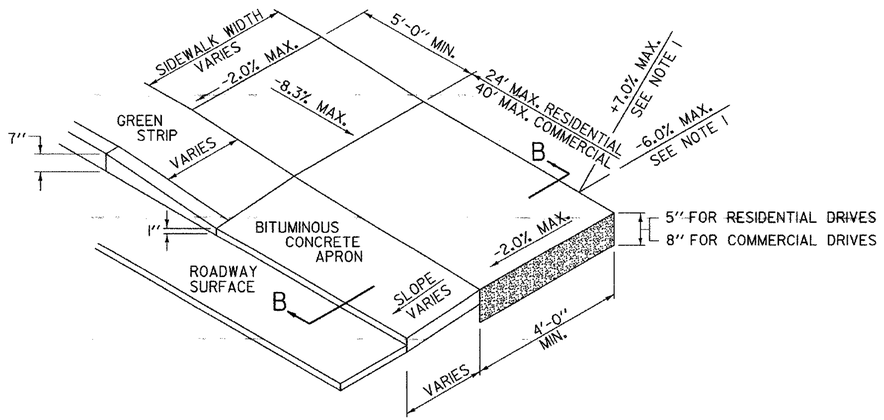

TYPE 7 - PARALLEL CROSSING WITH LANDING

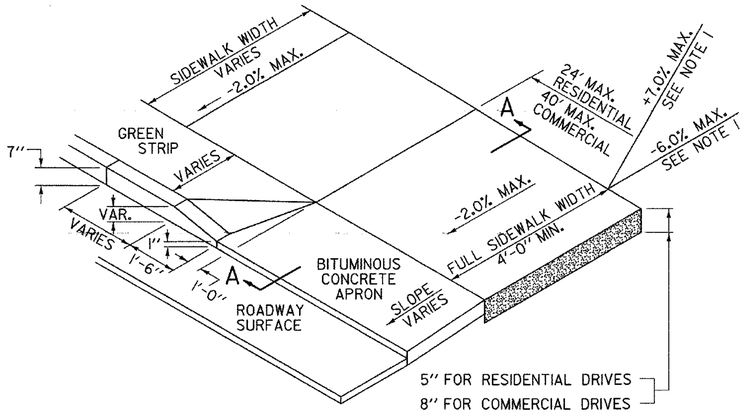

TYPE 6 - LEVEL LANDING WITH FLARE

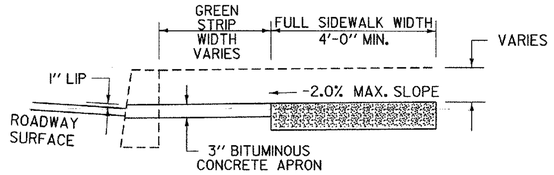

SECTION B-B

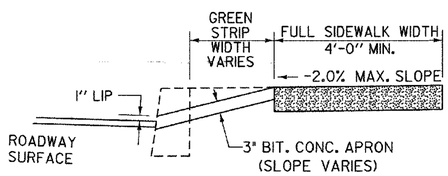

SECTION A-A

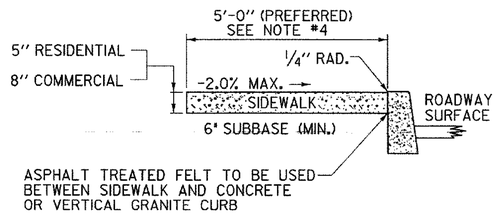

PORTLAND CEMENT CONCRETE SIDEWALK

GENERAL NOTES :

1. THESE TYPICALS APPLY WHERE GRADE OF DRIVE IS BETWEEN -6.0% AND +7.0%. FOR GRADES IN EXCESS OF THESE, ALTERNATIVE CROSS SECTION OF RAMP AND SIDEWALK MAY BE APPROVED BY THE ENGINEER.
2. DUMMY JOINTS SHALL BE PROVIDED AT TRANSITIONS (GRADE CHANGES) OF RAMPS AND FLARES.
3. DRIVEWAY RAMPS TO BE PAID FOR AS PORTLAND CEMENT CONCRETE SIDEWALK.
4. SIDEWALKS THAT ARE LESS THAN 5' WIDE REQUIRE 5' WIDE BY 5' LONG PASSING AREAS (NO GREATER THAN 2.0% CROSS SLOPE) AT INTERVALS NOT TO EXCEED 200'. DRIVEWAYS MEETING THESE REQUIREMENTS MAY BE USED AS A WHEELCHAIR PASSING AREA.
5. IN NO CASE SHALL THE CROSS SLOPE OF AN ACCESSIBLE ROUTE EXCEED 2.0%.

OTHER STANDARDS REQUIRED: B-71

REVISIONS AND CORRECTIONS

DEC. 14, 1971 - ORIGINAL APPROVAL DATE

OCT. 25, 1985 - REVISED TO CONFORM TO 1986 SPECIFICATIONS

JUNE 1, 1994 - REISSUED WITHOUT CHANGE, UNDER NEW SIGNATURES.

JAN. 3, 2000 - UPDATED TO REFLECT METRIC STD. CHANGES.

OCT. 14, 2005 - UPDATED TO REFLECT REVISED ADAAG STANDARDS

APPROVED

Asst DIRECTOR OF PROGRAM DEVELOPMENT

ROADWAY PROGRAM MANAGER

FEDERAL HIGHWAY ADMINISTRATION

PORTLAND CEMENT CONCRETE SIDEWALK DRIVE ENTRANCES WITH SIDEWALK AND GREEN STRIP

VERMONT AGENCY OF TRANSPORTATION

STANDARD

C-2B

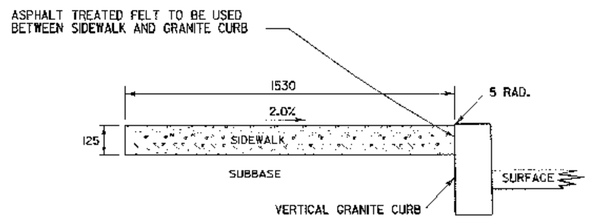

PORTLAND CEMENT CONCRETE SIDEWALK, 125
(WITH VERTICAL GRANITE CURB)

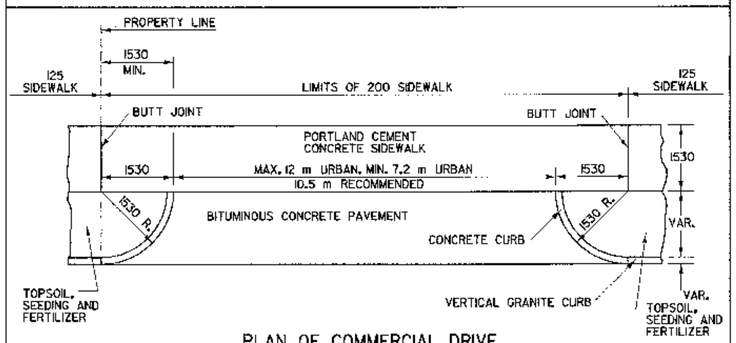

PLAN OF COMMERCIAL DRIVE

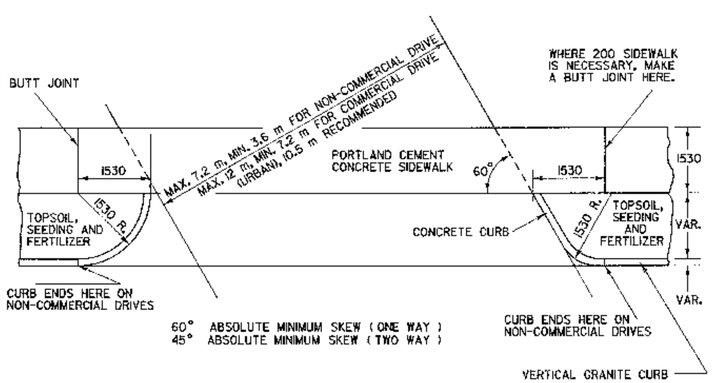

PLAN OF SKEW DRIVE

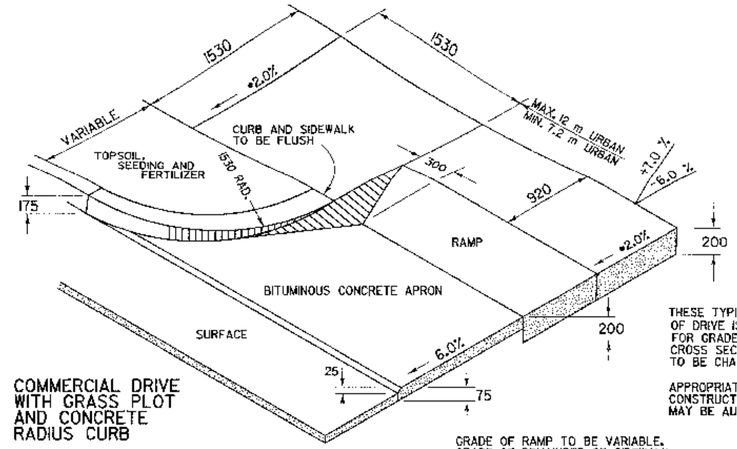

COMMERCIAL DRIVE WITH GRASS PLOT AND CONCRETE RADIUS CURB

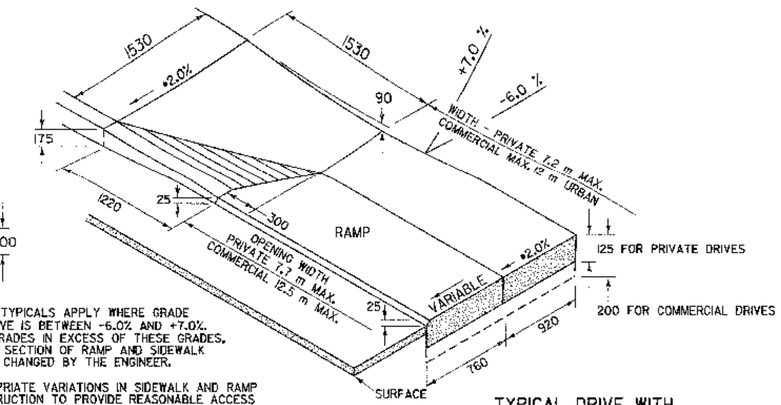

THESE TYPICALS APPLY WHERE GRADE OF DRIVE IS BETWEEN -6.0% AND +7.0%. FOR GRADES IN EXCESS OF THESE GRADES, CROSS SECTION OF RAMP AND SIDEWALK TO BE CHANGED BY THE ENGINEER.

APPROPRIATE VARIATIONS IN SIDEWALK AND RAMP CONSTRUCTION TO PROVIDE REASONABLE ACCESS MAY BE AUTHORIZED BY THE ENGINEER.

TYPICAL DRIVE WITH 1530 SIDEWALK ADJACENT TO VERTICAL GRANITE CURB

GRADE OF RAMP TO BE VARIABLE. GRADE OF REMAINDER OF SIDEWALK TO BE •2.0%. CONSTRUCTION JOINT TO BE MADE WHERE RAMP MEETS REMAINDER OF SIDEWALK IN DRIVE AREA.

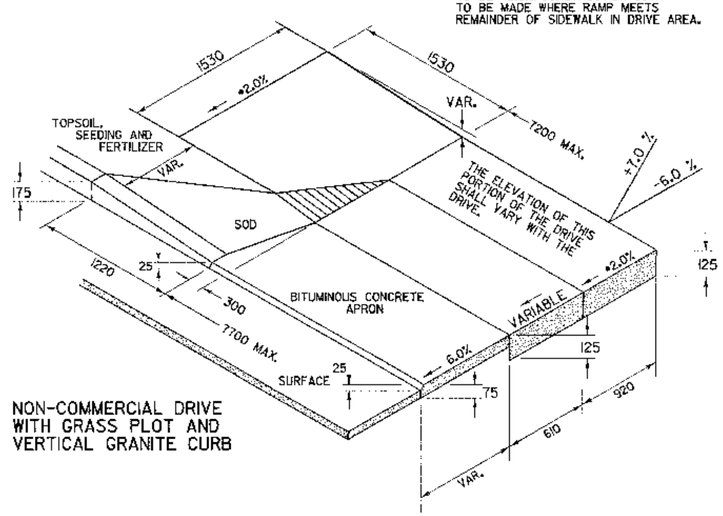

NON-COMMERCIAL DRIVE WITH GRASS PLOT AND VERTICAL GRANITE CURB

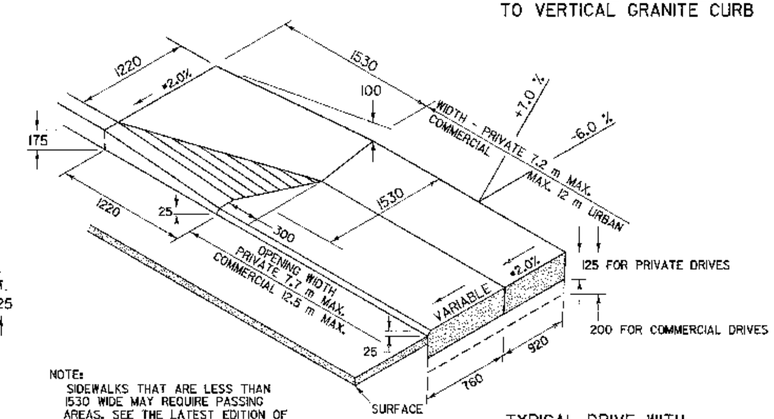

NOTE:
SIDEWALKS THAT ARE LESS THAN 1530 WIDE MAY REQUIRE PASSING AREAS. SEE THE LATEST EDITION OF ADA REQUIREMENTS.

TYPICAL DRIVE WITH 1220 SIDEWALK ADJACENT TO VERTICAL GRANITE CURB

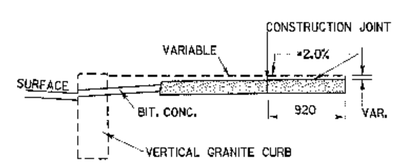

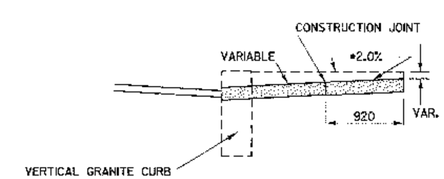

RAMPS TO BE PAID FOR AS PORTLAND CEMENT CONCRETE SIDEWALK
• IN NO CASE SHALL THE CROSS SLOPE OF AN ACCESSIBLE ROUTE EXCEED 2.0%.

NOTE:
FOR FURTHER DETAILS REGARDING DRIVEWAYS, SEE STANDARD B-71M.

NOTE: ALL DIMENSIONS ARE IN MILLIMETERS (mm) EXCEPT WHERE NOTED.

REVISIONS AND CORRECTIONS

JUNE 13, 1997 ORIGINAL APPROVAL DATE
JAN. 3, 2000 - MINOR EDITORIAL CHANGES

APPROVED

DIRECTOR OF PROJECT DEVELOPMENT

ROADWAY AND TRAFFIC DESIGN ENGINEER

PORTLAND CEMENT CONCRETE SIDEWALK DRIVE ENTRANCES WITH VERTICAL GRANITE CURB

VERMONT AGENCY OF TRANSPORTATION

VAOT Metric STANDARD C-2BM

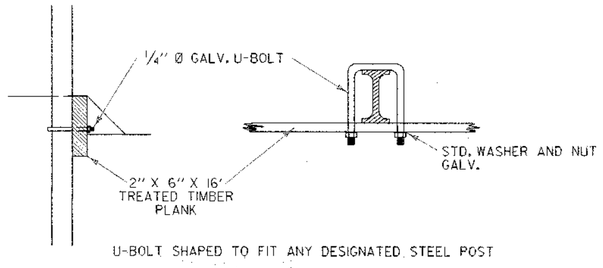

WITH STEEL POSTS

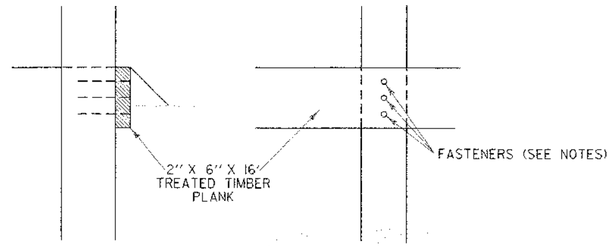

WITH WOOD POSTS (EXISTING CONDITION)

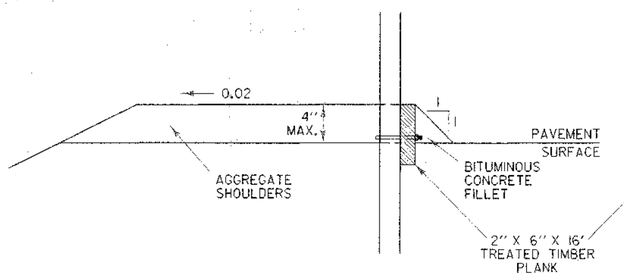

BITUMINOUS CONCRETE FILLET DETAIL

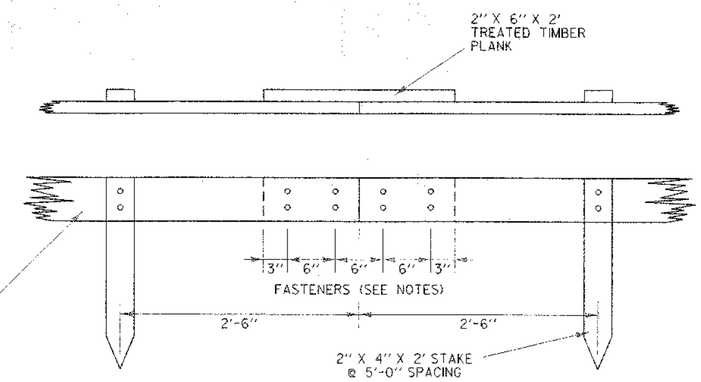

SPLICE DETAIL

TREATED TIMBER CURB

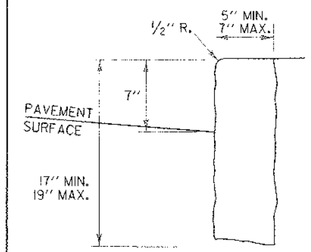

VERTICAL GRANITE CURB

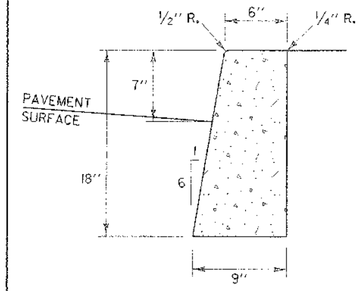

CAST IN PLACE CONCRETE CURB, TYPE B

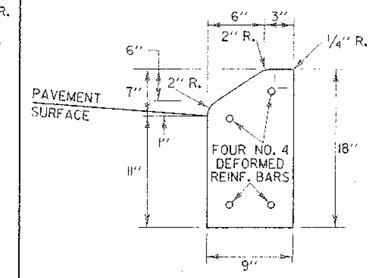

PRECAST REINFORCED CONCRETE CURB, TYPE A

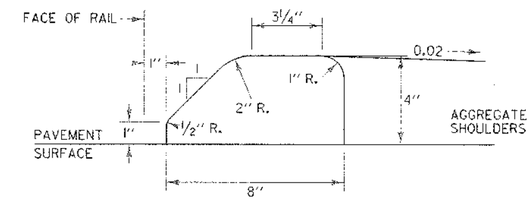

USE ONLY WITH STEEL BEAM GUARDRAIL

BITUMINOUS CONCRETE CURB, TYPE A

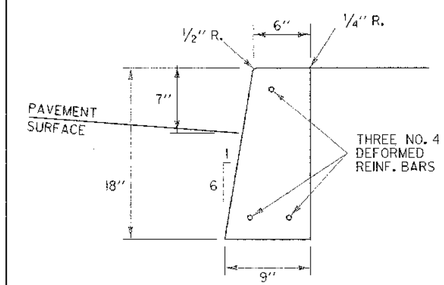

PRECAST REINFORCED CONCRETE CURB, TYPE B

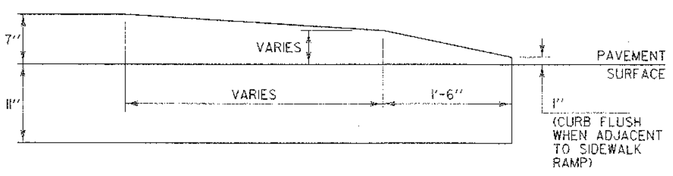

CONCRETE CURB END

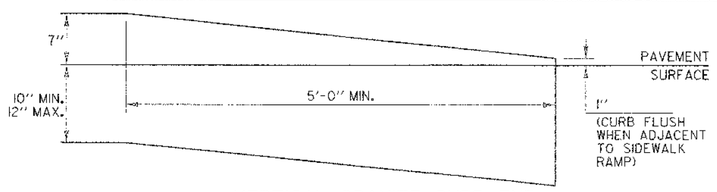

VERTICAL GRANITE CURB END

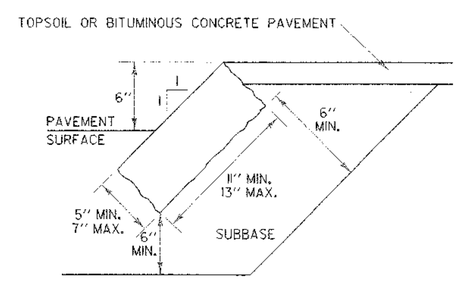

EDGING TO BE PLACED PRIOR TO PLACING TOP SURFACE COURSE.

GRANITE SLOPE EDGING

GENERAL NOTES:

1. HEIGHT OF REVEAL OF CURB SHALL NOT EXCEED FOUR INCHES WHERE DESIGN OR POSTED SPEED IS EQUAL TO OR GREATER THAN 40 MPH AND WHEN INSTALLED WITH GUARDRAIL (STANDARD SHAPE TO BE BURIED TO THIS DEPTH).
2. WHEN CONCRETE SIDEWALK IS CONSTRUCTED ADJACENT TO CONCRETE OR VERTICAL GRANITE CURB, ASPHALT TREATED FELT SHALL BE PLACED BETWEEN THE SIDEWALK AND CURB FOR THE TOTAL DEPTH OF THE SIDEWALK.
3. FASTENERS (20d NAILS OR SCREWS) SHALL BE CORROSION RESISTANT TO THE TREATED LUMBER.
4. FOR SPECIFICATIONS FOR EXPANSION/CONTRACTION JOINTS AND LENGTHS OF SECTIONS, SEE SECTION 616.
5. JOINTS BETWEEN CURB SECTIONS SHALL BE MORTARED IN CONFORMANCE WITH SECTION 616.
6. BITUMINOUS CONCRETE AND TREATED TIMBER CURB SHALL BE IN CONFORMANCE WITH SECTION 616.
7. TWO INCH MINIMUM CLEARANCE FROM FACE OF CONCRETE TO EDGE OF REINFORCING STEEL.

OTHER STDS. REQUIRED: **NONE**

REVISIONS AND CORRECTIONS

FEB. 11, 2008 - ORIGINAL APPROVAL DATE

APPROVED

Kevin S. Marchie
ROADWAY, TRAFFIC & SAFETY ENGINEER

Richard Fetterman
DIRECTOR OF PROGRAM DEVELOPMENT

Mark D. Richter
FEDERAL HIGHWAY ADMINISTRATION

CURBING

VERMONT AGENCY OF TRANSPORTATION

STANDARD

C-10

Intersection Zone Details

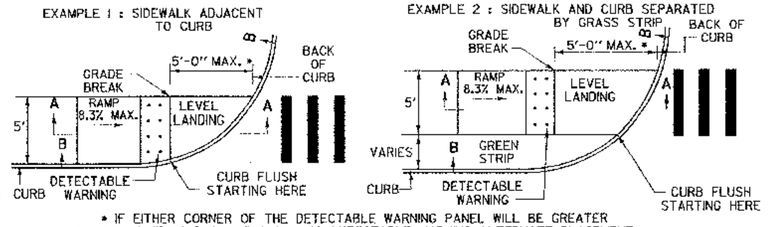

* IF EITHER CORNER OF THE DETECTABLE WARNING PANEL WILL BE GREATER THAN 5'-0" FROM BACK OF CURB, USE DETECTABLE WARNING ALTERNATE PLACEMENT

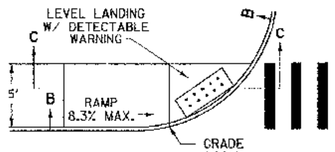

ALTERNATE PLACEMENT IS THE SAME WITH OR WITHOUT THE GRASS STRIP

EXAMPLE 1 & 2 DETECTABLE WARNING ALTERNATE PLACEMENT

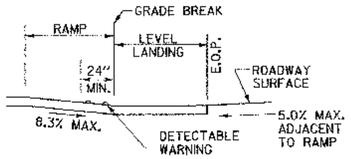

SECTION A-A

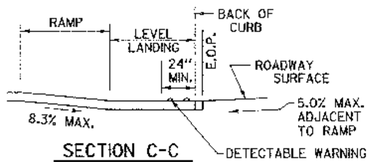

SECTION C-C

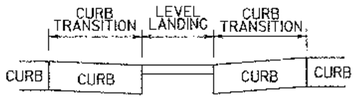

SECTION B-B

SIDEWALK RAMP TYPE 1

SINGLE WALK-STRAIGHT APPROACH TO PARALLEL RAMP.

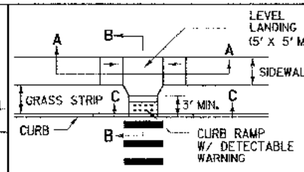

SIDEWALK RAMP TYPE 2

SINGLE PERPENDICULAR RAMP FROM LEVEL LANDING TANGENT SECTION

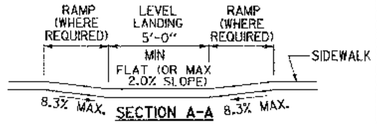

SECTION A-A

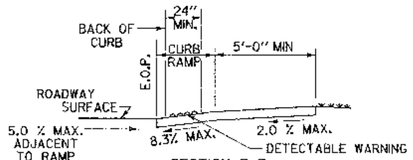

SECTION B-B

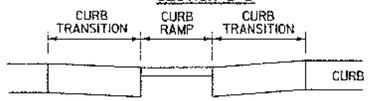

SECTION C-C

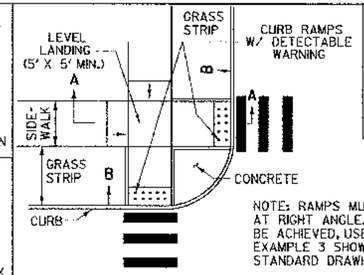

NOTE: RAMPS MUST INTERSECT CURB AT RIGHT ANGLE. IF THIS CANNOT BE ACHIEVED, USE RAMP TYPE 6, EXAMPLE 3 SHOWN ON VAOT STANDARD DRAWING C-3B.

SIDEWALK RAMP TYPE 3

TWO PERPENDICULAR RAMPS FROM LEVEL LANDING

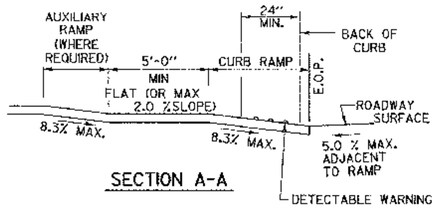

SECTION A-A

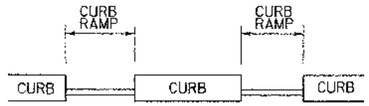

SECTION B-B (ALONG FACE OF CURB)

GENERAL NOTES:

1. THE DIMENSIONS AND GRADES SHOWN ON THIS STANDARD WILL BE ADHERED TO IN THE DESIGN AND THE CONSTRUCTION OF SIDEWALK RAMPS. WHERE SIDEWALKS RUN ADJACENT TO ROADWAYS ON STEEP (5% OR GREATER) GRADES, RAMP GRADES WILL BE AS FLAT AS POSSIBLE. (ON LOW SIDE OF DRIVES AND INTERSECTING SIDE STREETS, RAMPS SHALL SLOPE TOWARDS DRIVE OR SIDE STREET @ 2%)
2. NOMINAL RAMP DIMENSIONS AND GRADES:
   RAMP WIDTH - 4'-0" MINIMUM
   RAMP SLOPE - 8.3% MAXIMUM
   FLARE SLOPE - 10% MAXIMUM
   RAMP CROSS SLOPE - 2.0% MAXIMUM
3. A LEVEL LANDING (NO GREATER THAN 2.0% SLOPE IN ANY DIRECTION) SHALL BE PROVIDED AT THE TOP OF SIDEWALK RAMPS TO ALLOW FOR STOPPING AND MANEUVERING OF WHEELCHAIRS.
4. LEVEL LANDINGS (NO GREATER THAN 2.0% SLOPE IN ANY DIRECTION) AT THE BOTTOM OF PERPENDICULAR RAMPS SHALL BE WHOLLY CONTAINED WITHIN MARKED CROSSWALKS.
5. DUMMY JOINTS SHALL BE PROVIDED AT TRANSITIONS (GRADE CHANGES) AT TOPS AND BOTTOMS OF RAMPS AND FLARES.
6. VERTICAL DROP-OFF EDGES TO RAMPS WILL NOT BE BUILT UNLESS THE RAMP ABUTS AN AREA WHICH WILL NOT BE USED BY PEDESTRIANS.
7. NO VERTICAL "LIP" OR "CURB REVEAL" WILL BE PROVIDED WHERE THE RAMP ADJOINS THE ROADWAY.
8. AT MARKED CROSSWALKS, THE FULL WIDTH OF THE RAMP OR LANDING SHALL BE CONTAINED WITHIN THE PAVEMENT MARKINGS.
9. WHERE POSSIBLE, RAMP FLARES SHOULD BE LOCATED OUTSIDE THE DIRECT LINE OF TRAVEL MOST LIKELY TO BE FOLLOWED BY THE VISUALLY IMPAIRED.
10. SIGNS, POLES, PLANTERS, MAILBOXES, ETC. SHALL NOT BE LOCATED WHERE THEY WILL INTERFERE WITH THE USE OF SIDEWALK RAMPS.
11. WHERE POSSIBLE, SIDEWALK RAMPS SHOULD NOT BE LOCATED WHERE USERS MUST CROSS DROP INLET GRATES, MANHOLE COVERS OR OTHER ACCESS LIDS. IF THIS CANNOT BE AVOIDED THEN GRATE DESIGN AND PLACEMENT SHALL CONFORM TO ADA REQUIREMENTS.
12. CURB DRAINAGE SHOULD BE CONSTRUCTED SO AS TO PRECLUDE THE FLOW OF WATER PAST THE SIDEWALK RAMP.
13. WHEREVER FEASIBLE, TWO SIDEWALK RAMPS ARE RECOMMENDED IN PREFERENCE TO A SINGLE RAMP.
14. JOINTS WILL BE CONSTRUCTED IN ACCORDANCE WITH CURRENT SIDEWALK SPECIFICATIONS, HOWEVER EXPANSION JOINTS WITHIN THE SIDEWALK RAMP AREA WILL BE AVOIDED WHEREVER POSSIBLE.
15. SIDEWALKS THAT ARE LESS THAN 5' WIDE REQUIRE 5' WIDE BY 5' LONG PASSING AREAS (NO GREATER THAN 2.0% CROSS SLOPE) AT INTERVALS NOT TO EXCEED 200 FEET.
16. E.O.P. = EDGE OF PAVEMENT
17. THE PUBLIC SIDEWALK CURB RAMP STANDARDS DEPICTED HERE MAY NOT BE APPROPRIATE FOR ALL LOCATIONS. FIELD CONDITIONS AT INDIVIDUAL LOCATIONS MAY REQUIRE SPECIFIC DESIGNS. DESIGNS MUST BE CONSISTENT WITH THE PROVISIONS OF THIS SHEET TO THE MAXIMUM EXTENT FEASIBLE ON ALTERATION PROJECTS AND WHEN STRUCTURALLY PRACTICABLE ON NEW CONSTRUCTION PROJECTS AS REQUIRED BY THE AMERICANS WITH DISABILITIES ACT ACCESSIBILITY GUIDELINES.

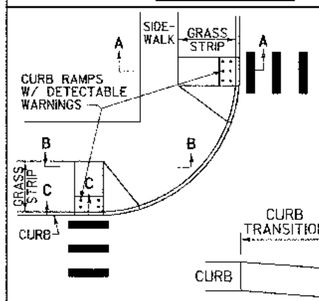

SIDEWALK RAMP TYPE 4

RAMP OFFSET FROM DIRECT LINE OF PEDESTRIAN TRAVEL

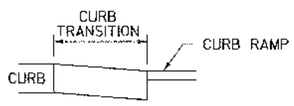

SECTION C-C

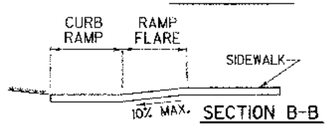

SECTION B-B

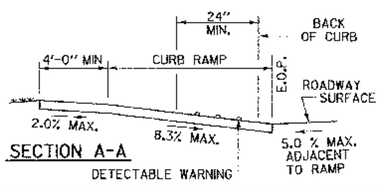

SECTION A-A

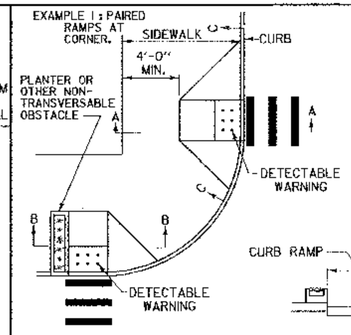

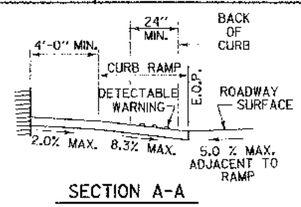

SECTION A-A

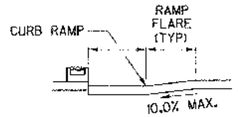

SECTION B-B

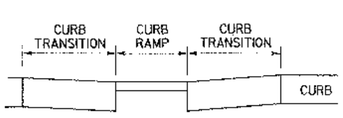

SECTION C-C

SIDEWALK RAMP TYPE 5

PERPENDICULAR RAMP IN URBAN SETTING - WIDE SIDEWALK

EXAMPLE 2 : SINGLE RAMP ON CORNER RADIUS.

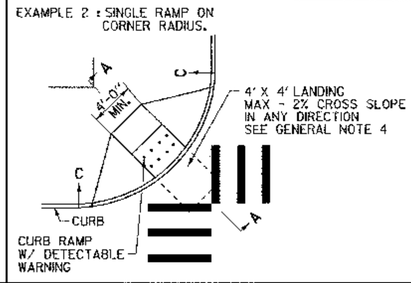

EXAMPLE 3 : RAMP ON TANGENT SECTION

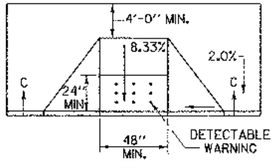

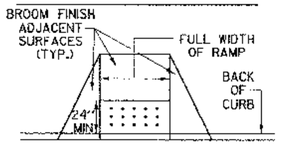

DETECTABLE WARNING PLACEMENT

DETECTABLE WARNING DETAILS

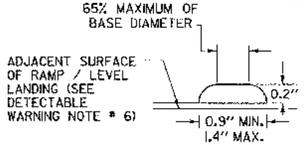

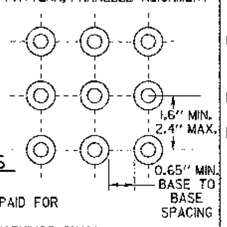

DETECTABLE WARNING DETAILS

DETECTABLE WARNING NOTES:

1. DETECTABLE WARNING SURFACES SHALL BE PAID FOR AS SPECIFIED IN THE CONTRACT.
2. CONCRETE ADJACENT TO ALL DETECTABLE WARNINGS SHALL HAVE A BROOM FINISH.
3. THE COLOR OF THE DETECTABLE WARNING SHALL PROVIDE A VISUAL CONTRAST TO THE SURROUNDING SURFACE AND SHALL BE AS SPECIFIED IN THE CONTRACT.
4. WHERE FEASIBLE, TRUNCATED DOMES SHALL BE ALIGNED ON A SQUARE GRID IN THE PREDOMINANT DIRECTION OF PEDESTRIAN TRAVEL.
5. WHERE A RAMP OR LEVEL LANDING MEETS A CURB RADIUS, ALIGN THE EDGE OF THE DETECTABLE WARNING AREA PARALLEL TO THE CURB TO THE MAXIMUM EXTENT FEASIBLE.
6. FOR SURFACE APPLIED TRUNCATED DOME PRODUCTS, A MAXIMUM 0.25" VERTICAL CHANGE IN ELEVATION IS ALLOWED. FOR CHANGES IN ELEVATION BETWEEN 0.25" AND 0.50", A BEVEL WITH A MAXIMUM 1:2 SLOPE IS REQUIRED. CHANGES IN ELEVATION GREATER THAN 0.50" MUST BE TREATED AS A RAMP-8.3% MAXIMUM SLOPE.
7. IF ANY PORTION OF THE EDGE OF THE DETECTABLE WARNING CLOSEST TO THE CURB WILL BE GREATER THAN 5'-0" FROM THE BACK OF CURB, THEN THE PANEL(S) SHALL BE LOCATED ON THE LEVEL LANDING AS CLOSE TO PARALLEL TO THE CURB LINE AS POSSIBLE.

OTHER STANDARDS REQUIRED: C-2A, C-2B, C-3B AND C-10

REVISIONS AND CORRECTIONS

FEB. 2, 2004 - DATE OF ORIGINAL ISSUE
SEPT. 1, 2004 - MINOR REVISIONS TO COMPLY WITH ADAAG
MAR. 10, 2008 - MINOR REVISIONS TO COMPLY WITH ADA STANDARDS

APPROVED

LOCAL TRANSPORTATION FACILITIES PROGRAM MANAGER

DIRECTOR OF PROGRAM DEVELOPMENT

FEDERAL HIGHWAY ADMINISTRATION

SIDEWALK RAMPS

VERMONT AGENCY OF TRANSPORTATION

STANDARD C-3A

MEDIAN ISLAND CUT THROUGH

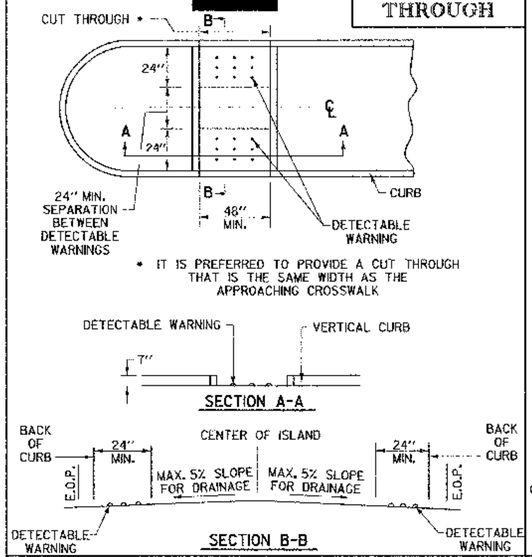

RAMPS AT WIDE MEDIAN ISLANDS

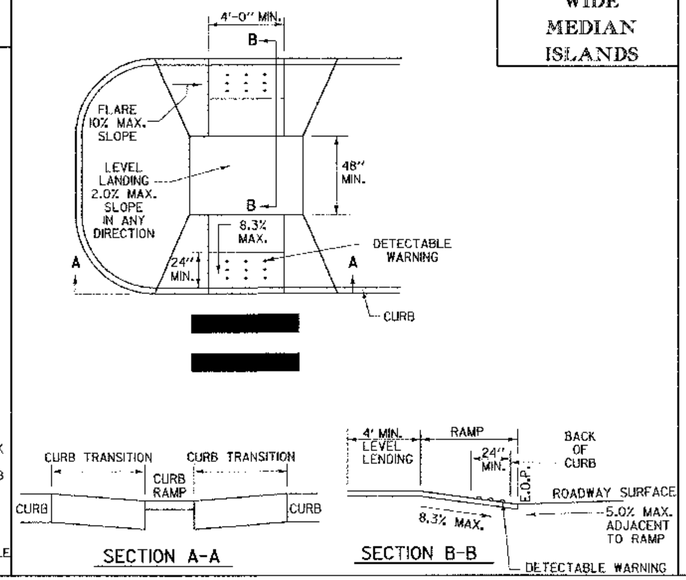

DETECTABLE WARNING AT RAILROAD CROSSING

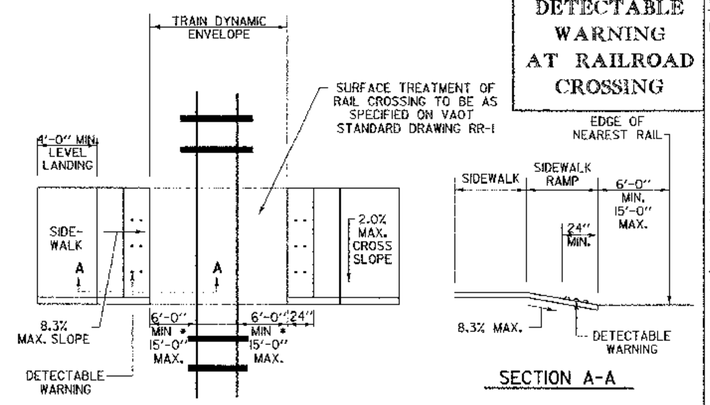

* WHERE THIS DISTANCE CANNOT BE MET, A CLEARANCE DISTANCE BETWEEN THE TOE OF THE SIDEWALK RAMP AND THE FACE OF RAIL WILL BE UPON AGREEMENT BETWEEN THE REQUESTING PARTY AND THE RAILROAD. HOWEVER, THE DETECTABLE WARNING SHALL BE OUTSIDE THE EDGE OF THE DYNAMIC ENVELOPE.

NOTE: WHERE A PEDESTRIAN GATE IS PROVIDED ACROSS THE SIDEWALK, THE NEAREST EDGE OF THE DETECTABLE WARNING SHALL BE A MINIMUM OF 2'-0" FROM THE FACE OF THE GATE ARM.

GENERAL NOTES:

1. THE DIMENSIONS AND GRADES SHOWN ON THIS STANDARD WILL BE ADHERED TO IN THE DESIGN AND THE CONSTRUCTION OF SIDEWALK RAMPS. WHERE SIDEWALKS RUN ADJACENT TO ROADWAYS ON STEEP (5% OR GREATER) GRADES, RAMP GRADES WILL BE AS FLAT AS POSSIBLE. (ON LOW SIDE OF DRIVES AND INTERSECTING SIDE STREETS, RAMPS SHALL SLOPE TOWARDS DRIVE OR SIDE STREET @ 2%)
2. NOMINAL RAMP DIMENSIONS AND GRADES:
   RAMP WIDTH - 4'-0" MINIMUM
   RAMP SLOPE - 8.3% MAXIMUM
   FLARE SLOPE - 10% MAXIMUM
   RAMP CROSS SLOPE - 2.0% MAXIMUM
3. A LEVEL LANDING (NO GREATER THAN 2.0% SLOPE IN ANY DIRECTION) SHALL BE PROVIDED AT THE TOP OF SIDEWALK RAMPS TO ALLOW FOR STOPPING AND MANEUVERING OF WHEELCHAIRS.
4. LEVEL LANDINGS (NO GREATER THAN 2.0% SLOPE IN ANY DIRECTION) AT THE BOTTOM OF PERPENDICULAR RAMPS SHALL BE WHOLLY CONTAINED WITHIN MARKED CROSSWALKS.
5. DUMMY JOINTS SHALL BE PROVIDED AT TRANSITIONS (GRADE CHANGES) AT TOPS AND BOTTOMS OF RAMPS AND FLARES.
6. VERTICAL DROP-OFF EDGES TO RAMPS WILL NOT BE BUILT UNLESS THE RAMP ABUTS AN AREA WHICH WILL NOT BE USED BY PEDESTRIANS.
7. NO VERTICAL "LIP" OR "CURB REVEAL" WILL BE PROVIDED WHERE THE RAMP ADJOINS THE ROADWAY.
8. AT MARKED CROSSWALKS, THE FULL WIDTH OF THE RAMP OR LANDING SHALL BE CONTAINED WITHIN THE PAVEMENT MARKINGS.
9. WHERE POSSIBLE, RAMP FLARES SHOULD BE LOCATED OUTSIDE THE DIRECT LINE OF TRAVEL MOST LIKELY TO BE FOLLOWED BY THE VISUALLY IMPAIRED.
10. SIGNS, POLES, PLANTERS, MAILBOXES, ETC. SHALL NOT BE LOCATED WHERE THEY WILL INTERFERE WITH THE USE OF SIDEWALK RAMPS.
11. WHERE POSSIBLE, SIDEWALK RAMPS SHOULD NOT BE LOCATED WHERE USERS MUST CROSS DROP INLET GRATES, MANHOLE COVERS OR OTHER ACCESS LIDS. IF THIS CANNOT BE AVOIDED THEN GRATE DESIGN AND PLACEMENT SHALL CONFORM TO ADA REQUIREMENTS.
12. CURB DRAINAGE SHOULD BE CONSTRUCTED SO AS TO PRECLUDE THE FLOW OF WATER PAST THE SIDEWALK RAMP.
13. WHEREVER FEASIBLE, TWO SIDEWALK RAMPS ARE RECOMMENDED IN PREFERENCE TO A SINGLE RAMP.
14. JOINTS WILL BE CONSTRUCTED IN ACCORDANCE WITH CURRENT SIDEWALK SPECIFICATIONS, HOWEVER EXPANSION JOINTS WITHIN THE SIDEWALK RAMP AREA WILL BE AVOIDED WHEREVER POSSIBLE.
15. SIDEWALKS THAT ARE LESS THAN 5' WIDE REQUIRE 5' WIDE BY 5' LONG PASSING AREAS (NO GREATER THAN 2.0% CROSS SLOPE) AT INTERVALS NOT TO EXCEED 200 FEET.
16. E.O.P. = EDGE OF PAVEMENT
17. THE PUBLIC SIDEWALK CURB RAMP STANDARDS DEPICTED HERE MAY NOT BE APPROPRIATE FOR ALL LOCATIONS. FIELD CONDITIONS AT INDIVIDUAL LOCATIONS MAY REQUIRE SPECIFIC DESIGNS. DESIGNS MUST BE CONSISTENT WITH THE PROVISIONS OF THIS SHEET TO THE MAXIMUM EXTENT FEASIBLE ON ALTERATION PROJECTS AND WHEN STRUCTURALLY PRACTICABLE ON NEW CONSTRUCTION PROJECTS AS REQUIRED BY THE AMERICANS WITH DISABILITIES ACT ACCESSIBILITY GUIDELINES.

SIDEWALK RAMP TYPE 6

NARROW SIDEWALK PARALLEL RAMPS AND LEVEL LANDINGS WITHIN WALKWAY.

EXAMPLE 1: PAIRED PARALLEL RAMPS AT CORNER; SIDEWALK ADJACENT TO CURB.

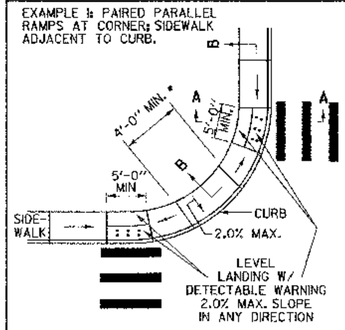

* WHERE A 4' MINIMUM SEPARATION BETWEEN RAMPS CANNOT BE ATTAINED, THE SIDEWALK SHOULD REMAIN AT THE SAME ELEVATION AS ADJOINING LEVEL LANDINGS.

EXAMPLE 2: SINGLE RAMP ON CORNER RADIUS; SIDEWALK ADJACENT TO CURB.

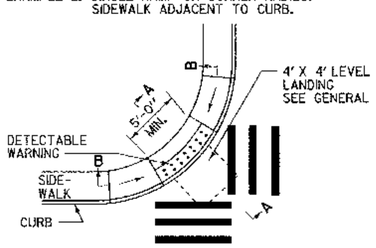

EXAMPLE 3: SINGLE PARALLEL RAMP ON CORNER RADIUS; NARROW GRASS STRIP BETWEEN SIDEWALK AND CURB.

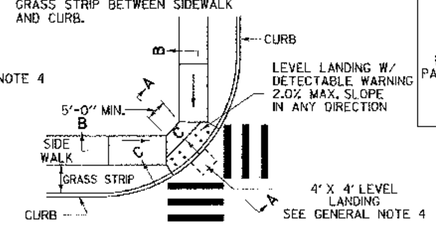

EXAMPLE 4: SINGLE RAMP ON TANGENT; NARROW GRASS STRIP

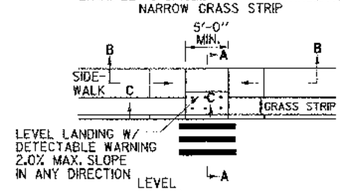

EXAMPLE 5: SINGLE RAMP ON TANGENT; SIDEWALK ADJACENT TO CURB

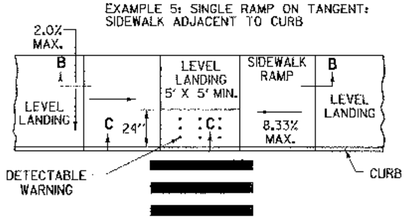

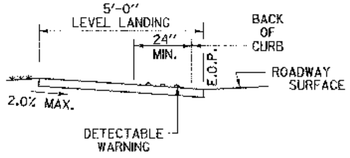

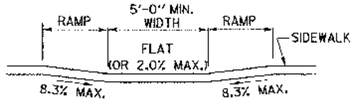

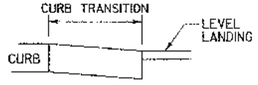

DETECTABLE WARNING DETAILS

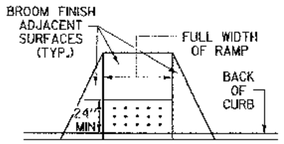

DETECTABLE WARNING PLACEMENT

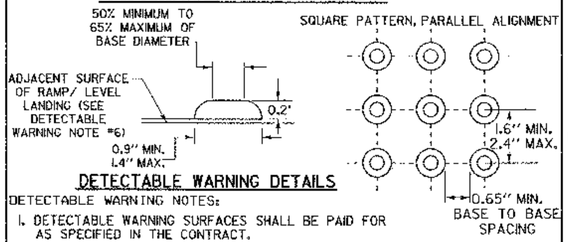

DETECTABLE WARNING DETAILS

DETECTABLE WARNING NOTES:

1. DETECTABLE WARNING SURFACES SHALL BE PAID FOR AS SPECIFIED IN THE CONTRACT.
2. CONCRETE ADJACENT TO ALL DETECTABLE WARNINGS SHALL HAVE A BROOM FINISH.
3. THE COLOR OF THE DETECTABLE WARNING SHALL PROVIDE A VISUAL CONTRAST TO THE SURROUNDING SURFACE AND SHALL BE AS SPECIFIED IN THE CONTRACT.
4. WHERE FEASIBLE, TRUNCATED DOMES SHALL BE ALIGNED ON A SQUARE GRID IN THE PREDOMINANT DIRECTION OF PEDESTRIAN TRAVEL.
5. WHERE A RAMP OR LEVEL LANDING MEETS A CURB RADIUS, ALIGN THE EDGE OF THE DETECTABLE WARNING AREA PARALLEL TO THE CURB TO THE MAXIMUM EXTENT FEASIBLE.
6. FOR SURFACE APPLIED TRUNCATED DOME PRODUCTS, A MAXIMUM 0.25" VERTICAL CHANGE IN ELEVATION IS ALLOWED. FOR CHANGES IN ELEVATION BETWEEN 0.25" AND 0.50", A BEVEL WITH A MAXIMUM 1:2 SLOPE IS REQUIRED. CHANGES IN ELEVATION GREATER THAN 0.50" MUST BE TREATED AS A RAMP- 8.3% MAXIMUM SLOPE.
7. IF ANY PORTION OF THE EDGE OF THE DETECTABLE WARNING CLOSEST TO THE CURB WILL BE GREATER THAN 5'-0" FROM THE BACK OF CURB, THEN THE PANEL(S) SHALL BE LOCATED ON THE LEVEL LANDING AS CLOSE TO PARALLEL TO THE CURB LINE AS POSSIBLE.

OTHER STANDARDS REQUIRED: C-2A, C-2B, C-3A, C-10 AND RR-1

REVISIONS AND CORRECTIONS

FEB. 2, 2004	- DATE OF ORIGINAL ISSUE
SEPT. 1, 2004	- MINOR REVISIONS TO COMPLY WITH ADAAG
MAR. 10, 2008	- MINOR REVISIONS TO COMPLY WITH ADA STANDARDS

APPROVED

LOCAL TRANSPORTATION FACILITIES PROGRAM MANAGER

DIRECTOR OF PROGRAM DEVELOPMENT

FEDERAL HIGHWAY ADMINISTRATION

SIDEWALK RAMPS AND MEDIAN ISLANDS

VERMONT AGENCY OF TRANSPORTATION

STANDARD

C-3B

Utility Details

URD-GENERAL

ALL B.E.D. OWNED UNDERGROUND CABLE SHALL BE INSTALLED IN APPROVED CONDUIT. CUSTOMER OWNED CABLE SHALL ALSO BE INSTALLED IN APPROVED CONDUIT.

PRIMARY SYSTEMS WITH 3 OR MORE TRANSFORMERS SHALL BE DESIGNED AS LOOP FEED. THE LOOP FEED SYSTEM WILL NORMALLY HAVE THE OPEN POINT AT A PADMOUNT OR TERMINATING CABINET NEAR THE CENTER OF THE LOOP. ARRESTER(S) SHALL BE INSTALLED AT OPEN POINT PER STANDARD 0703. EACH SEGMENT OF THE LOOP SHALL BE ENCASED IN AN INDIVIDUAL CONDUIT.

CONDUIT SECTIONS BETWEEN TERMINATING POINTS, TRANSFORMERS OR TERMINATING CABINETS, SHALL NOT EXCEED 400 FEET.

SERVICE TO CUSTOMERS IN A RESIDENTIAL SUBDIVISION SHALL BE PROVIDED FROM THE FRONT PROPERTY LINE.

IN THOSE AREAS DESIGNATED FOR FUTURE 13.8 KV OPERATION, THE CONDUIT SIZES AND CABLE PULLING FORCES SHALL BE DESIGNED FOR 15 KV CABLE.

ALL UNDERGROUND SYSTEMS, INCLUDING UNDERGROUND SERVICES FROM OVERHEAD LINES, SHALL BE MAPPED SHOWING THE LOCATION OF ALL CONDUITS AND EQUIPMENT. LOCATIONS SHALL BE IN RELATION TO FIXED POINTS SUCH AS PROPERTY BOUNDARIES. VARIATIONS IN DESIGN SHALL BE REPORTED TO THE ENGINEERING DEPARTMENT FOR REVISION OF DRAWINGS.

BURLINGTON ELECTRIC DEPT.		UNDERGROUND GENERAL
DISTRIBUTION STANDARDS		
ISSUE DATE: 4/13/98		
DWN BY: CC	APP. BY:	
SCALE: NONE	SHEET 1 OF 3	FILE NAME: 160101

B.E.D. RESPONSIBILITIES

A) OWNING AND MAINTAINING UNDERGROUND SYSTEM.
** B) PROVIDING AN ELECTRICAL DESIGN PLAN.
C) PROVIDING TO THE CUSTOMER AN ESTIMATE OF COST FOR B.E.D. WORK AND MATERIALS.
D) PROVIDING TRENCH, CONDUIT AND BACK FILL SPECIFICATIONS.
E) PROVIDING RISER POLE SPECIFICATIONS.
** F) PROVIDING AND INSTALLING PRIMARY CONDUCTORS AND TERMINATIONS.
G) PROVIDING EQUIPMENT FOUNDATION SPECIFICATIONS.
** H) INSPECTING CONDUIT AND FOUNDATION INSTALLATIONS.
I) PROVIDING METERING SPECIFICATIONS.
J) PROVIDING TRANSFORMERS.
** K) INSTALLING TRANSFORMERS.
L) PROVIDING AND INSTALLING TERMINATING CABINETS.
** M) PROVIDING AND INSTALLING GROUND GRIDS.
N) PROVIDING RED MARKING TAPE.
** O) CONNECTING SERVICES AT TRANSFORMER SECONDARY.

* B.E.D. WILL ASSUME OWNERSHIP AFTER SYSTEM IS ENERGIZED.
** AT CUSTOMER EXPENSE.

CUSTOMER RESPONSIBLITIES

A) PROVIDING A SURVEY PLOT PLAN, DETAILING SIGNIFICANT STRUCTURES AND OTHER UTILITIES.
B) PROVIDING DETAILED LOAD INFORMATION.
C) PROVIDING FOR NECESSARY EASEMENTS.
D) MAKING PAYMENT TO B.E.D. IN ADVANCE OF CONSTRUCTION.
E) PROVIDING 5 WORKING DAYS NOTICE TO B.E.D. PRIOR TO ANY REQUIRED INSTALLATIONS.
F) PROVIDING TRENCH AND BACKFILL UNDER INSPECTION OF B.E.D. PERSONNEL.
* G) INSTALLING RED MARKING TAPE.
* H) PROVIDING AND INSTALLING ALL CONDUITS COMPLETE WITH 500# RATED PULL STRING UNDER INSPECTION OF B.E.D. PERSONNEL.
* I) PROVIDING ALL PRIMARY CONDUIT RELATED EQUIPMENT ON RISER POLE INCLUDING SLIP JOINTS, SWEEPS AND CONDULATORS OR WEATHERHEADS TO B.E.D. STANDARDS.
* J) PROVIDING AND INSTALLING OF ALL CONCRETE FOUNDATIONS.
* K) PROVIDING AND INSTALLING RESIDENTIAL SERVICES.
L) PROVIDING AND INSTALLING COMMERCIAL AND INDUSTRIAL SERVICES.
M) NOTIFYING B.E.D. FOR INSPECTION PRIOR TO BACKFILLING CONDUIT INSTALLATION.
** N) PROVIDING AND INSTALLING FOUNDATIONS.

* B.E.D. WILL ASSUME OWNERSHIP AFTER SYSTEM IS ENERGIZED.
** AT CUSTOMER EXPENSE.

BURLINGTON ELECTRIC DEPT.		UNDERGROUND GENERAL
DISTRIBUTION STANDARDS		
ISSUE DATE: 2/24/97		
DWN BY: CC	APP. BY:	
SCALE: NONE	SHEET 3 OF 3	FILE NAME: 160103

EXCAVATION AND CONDUIT

1.0 SCOPE:

THIS STANDARD DESCRIBES THE APPROVED METHOD OF INSTALLATION OF UNDERGROUND ELECTRICAL CONDUIT(S).

2.0 DUCT BANK SYSTEM:

2.1 ALL UNDERGROUND CABLES SHALL BE INSTALLED IN APPROVED CONDUIT. DIRECT BURY OF CONDUCTORS IS NOT ACCEPTED.

2.2 REFER TO ALL PROJECT DRAWINGS FOR ASSOCIATED WORK PRIOR TO LAYING DUCT RUNS.

2.3 THE DRAWINGS INDICATE APPROXIMATE LOCATIONS ONLY AND ARE NOT INTENDED TO ESTABLISH EXACT LOCATIONS. IN LAYING OUT THE WORK, IF THE CONTRACTOR ENCOUNTERS CONDITIONS WHICH INDICATE CONFLICT WITH THE INTENT OF THE PLANS THEY SHALL PROPERLY NOTIFY THE BURLINGTON ELECTRIC DEPARTMENT OF SUCH CONFLICT AND REQUEST ADJUSTMENT BEFORE PROCEEDING WITH THE WORK IN THE AFFECTED AREA.

3.0 EXCAVATION:

3.1 THE BOTTOM OF THE TRENCH SHALL BE UNDISTURBED OR TAMPED EARTH AND OF RELATIVELY SMOOTH ARCH. THE BOTTOM OF THE TRENCH WILL BE LINED WITH A MINIMUM OF 2 INCHES OF SAND.

3.2 ALL BACKFILL SHALL BE FREE OF ANY MATERIAL THAT MAY DAMAGE THE CONDUIT(S). A MINIMUM OF 6 INCHES OF SAND WILL COVER DUCT(S).

4.0 INSTALLATION PRACTICE:

4.1 A) CONDUIT SHALL BE INSTALLED TO THE DEPTH AND SEPARATION REQUIREMENTS AS SHOWN ON B.E.D. STANDARD 1604.

B) CONTRACTOR SHALL INSTALL B.E.D. FURNISHED PLASTIC WARNING TAPE, DESCRIBING BURIED ELECTRICAL LINE(S), ALONG ENTIRE LENGTH OF DUCT BANK. BURY AT DEPTH SHOWN ON B.E.D. STANDARD 1604.

BURLINGTON ELECTRIC DEPT.	
DISTRIBUTION STANDARDS	
EXCAVATION AND CONDUIT	
DATE: 05/14/12	DWG. NO.: 160201
DWN BY: RG	APP. BY: MK
SCALE: NONE	SHEET 1 OF 5

4.2 UNLESS OTHERWISE NOTED, MATERIAL USED FOR CONDUIT SEPARATION, SHALL BE CLEAN SAND.

4.3 A) CONDUIT SYSTEMS SHALL MAINTAIN A MINIMUM CLEARANCE FROM WATER, SEWER AND GAS LINES OF 5 FEET. WHERE THIS IS NOT FEASIBLE, A LESSER CLEARANCE MAY BE AUTHORIZED WITH WRITTEN APPROVAL OF ALL PARTIES INVOLVED. APPROVALS SHALL BE SUBMITTED TO B.E.D. BY THE REQUESTING PARTY.

B) CONDUIT SYSTEMS CROSSING WATER, SEWER OR GAS LINES WILL BE INSTALLED SO AS NOT TO PLACE ANY STRAIN ON THESE SERVICES.

4.4 A MAXIMUM OF 270 DEGREES WILL BE PERMITTED IN A SINGLE RUN OF CONDUIT. BENDS AND SWEEPS SHALL BE OF A 36" RADIUS. NO CHANGE OF DIRECTION GREATER THAN 5 DEGREES WILL BE PERMITTED BETWEEN LENGTHS OF RIGID CONDUIT WITHOUT THE USE OF A FORMED BEND. NO KINKS OR DISTORTIONS WILL BE ACCEPTED IN FORMED BENDS.

4.5 CONDUIT JOINTS SHALL BE MADE WITH APPROVED MATERIALS AND CONSTRUCTION PRACTICES.

4.6 SUPPORT BRACKETS ON RISER POLES WILL BE FURNISHED BY B.E.D. AND BILLED TO THE CUSTOMER. CONDUITS SHALL BE STUBBED UP A MINIMUM OF 6 INCHES FROM THE FACE OF THE POLE TO ALLOW FOR STAND-OFF BRACKETS. B.E.D. SHALL INSTALL, AT THE CUSTOMER'S EXPENSE, CUSTOMER FURNISHED CONDUIT FOR RISER TO OVERHEAD CONNECTION.

4.7 APPROVAL OF ROUTING, RISER LOCATION AND PLACEMENT OF OTHER ITEMS DEEMED NECESSARY SHALL BE OBTAINED FROM B.E.D. IN WRITING PRIOR TO CONSTRUCTION.

4.8 THE FOLLOWING SPACINGS SHALL BE MAINTAINED BETWEEN ADJACENT CONDUITS:
CONCRETE ENCASED – 2 INCHES
NON-CONCRETE ENCASED – 2 INCHES

4.9 DUCT SPACERS SHALL BE SPACED NOT MORE THAN 6 FEET APART ALONG STRAIGHT RUNS AND NOT MORE THAN 2 FEET FROM UTILITY HOLE WALLS OR LATERAL TAKEOFF ELBOWS. BASE SPACERS SHALL BE SET ON A FIRM BASE AND SUPPORTED TO PREVENT MOVEMENT DURING POUR.

BURLINGTON ELECTRIC DEPT.	
DISTRIBUTION STANDARDS	
EXCAVATION AND CONDUIT	
DATE: 05/14/12	DWG. NO.: 160202
DWN BY: RG	APP. BY: MK
SCALE: NONE	SHEET 2 OF 5

4.10 PVC DUCT JOINTS SHALL BE MADE WATERTIGHT BY THE USE OF A BRUSH APPLIED CEMENT AS RECOMMENDED BY THE MANUFACTURER.

4.11 WHEN FIELD BENDS ARE REQUIRED, THE USE OF HOT-BOX BENDERS AS RECOMMENDED BY THE DUCT MANUFACTURER IS REQUIRED. THE BENDS SHALL NOT CAUSE ANY CHANGE IN THE CONFIGURATION OR INTERNAL CROSS SECTION AREA OF THE DUCT.

5.0 CONDUIT:

5.1 ALL CONDUIT SHALL MEET NEMA STANDARD TC-2 (LATEST EDITION). ALL FITTINGS SHALL MEET NEMA STANDARD TC-3 (LATEST EDITION).

5.2 CONDUIT UNDER SIDEWALKS OR DRIVEWAYS SHALL BE SCHEDULE 80 PVC, UL LISTED NON-CONCRETE ENCASED OR SCHEDULE 40, UL LISTED, ENCASED IN CONCRETE. WHENEVER POSSIBLE, CONDUITS UNDER THE DRIVEWAY SHALL BE PVC SCHEDULE 80 (OR EQUIVALENT STRENGTH) AND BE INSTALLED USING DIRECTIONAL DRILLING OR CONDUIT MOLING. IF CONTRACTOR INSTALLS PVC CONDUITS SCHEDULE 80 (OR EQUIVALENT STRENGTH) UNDER SIDEWALKS OR DRIVEWAYS, CONTRACTOR MUST INSTALL THE PVC SCHEDULE 80 CONDUIT (OR EQUIVALENT STRENGTH) FROM THE UNDERGROUND BOX TO THE THE SIDEWALKS OR DRIVEWAYS.

5.3 CONDUIT UNDER LAWNS SHALL BE SCHEDULE 40, UL LISTED, UNLESS OTHERWISE NOTED.

5.4 CONDUIT UNDER PAVED AND NON-PAVED AREAS SUBJECT TO VEHICULAR TRAFFIC AND OTHER AREAS DESIGNATED BY B.E.D. SHALL BE MINIMUM SCHEDULE 40, UL LISTED, ENCASED IN CONCRETE.

5.5 RISER CONDUIT SHALL BE SCHEDULE 80 PVC UL LISTED FOR THE FIRST 10 FEET ABOVE GRADE. EXPANSION COUPLING SHALL BE INSTALLED AS SHOWN ON STANDARD 1616 & 1617.

5.6 SIZE AND QUANTITY OF CONDUITS SHALL BE SPECIFIED FOR EACH APPLICANT BY B.E.D.

5.7 A 1/4 INCH NYLON OR POLYPROPYLENE PULL LINE HAVING A 500 LB RATING SHALL BE INSTALLED AND SECURED IN EACH CONDUIT LINE.

5.8 PVC FITTINGS-COUPLINGS, ELBOWS, BELL ENDS, SPACERS AND ADAPTER FITTINGS SHALL BE THE PRODUCT OF THE SAME MANUFACTURER AS THE DUCT AND DESIGNATED FOR USE WITH THE TYPE DUCT INSTALLED, OR BE BY B.E.D.

5.9 CONDUIT TYPES WITHIN AN UNDERGROUND RUN WILL NOT BE MIXED.

BURLINGTON ELECTRIC DEPT.	
DISTRIBUTION STANDARDS	
EXCAVATION AND CONDUIT	
DATE: 05/14/12	DWG. NO.: 160203
DWN BY: RG	APP. BY: MK
SCALE: NONE	SHEET 3 OF 5

6.0 ENCASEMENT AND ANCHORING:

6.1 WHERE ENCASEMENT IS SPECIFIED (SEE 5.3) CONCRETE SHALL BE OF A GRADE OF NO LESS THAN 3000 PSI COMPRESSIVE STRENGTH RATING. SLUMP SHALL BE 3 TO 5 INCHES AND THE CONCRETE SHALL BE WORKED IN TO COMPLETELY SURROUND THE CONDUITS.

6.2 CONCRETE ENCASEMENT SHALL EXTEND A MINIMUM OF 4 INCHES AWAY FROM THE OUTERMOST CONDUITS IN ALL DIRECTIONS.

6.3 WHEN IT IS EXPECTED THAT THERE WILL BE AN INTERVAL OF 4 HOURS OR LONGER BETWEEN POURS OF CONCRETE, REINFORCEMENT BARS SHALL BE INSTALLED ACROSS THE CONSTRUCTION JOINT. THE BARS SHALL BE SIZE #4 AND NOT LESS THAN 6 FEET IN LENGTH. ONE BAR SHALL BE INSTALLED IN EACH CORNER, AND BETWEEN DUCTS IN THE TOP AND BOTTOM OF EACH CONCRETE ENVELOPE, 2 INCHES FROM THE OUTSIDE SURFACE. EACH BAR SHALL EXTEND APPROXIMATELY EQUAL DISTANCES INTO THE TWO POURS OF CONCRETE.

6.4 DUCTS ENTERING UTILITY HOLES OR VAULT WALLS SHALL TERMINATE WITH BELL ENDS GROUTED INTO UTILITY HOLE WALL WITH MINIMUM 2500 LB PER SQUARE INCH CONCRETE. ENTRY INTO EXISTING UTILITY HOLES SHALL BE MADE BY USE OF CORE DRILL.

6.5 EXISTING CABLES AND EQUIPMENT IN UTILITY HOLES SHALL BE PROTECTED FROM POSSIBLE DAMAGE AND ALL FORMS AND OTHER MATERIALS COMPLETELY REMOVED WHEN INSTALLATION IS COMPLETE. ALL WORK IN EXISTING UTILITY HOLES SHALL BE COORDINATED AND APPROVED BY BURLINGTON ELECTRIC DEPARTMENT.

6.6 PRIOR TO POURING CONCRETE, THE DUCT SHALL BE SECURELY ANCHORED TO PREVENT MOVEMENT DURING THE POUR. ANCHORS SHALL BE WITHIN 2 FEET AND ON EACH SIDE OF JOINT, AT EACH END OF BEND, AND A MAXIMUM DISTANCE OF 10 FEET BETWEEN ANCHORS.

BURLINGTON ELECTRIC DEPT.	
DISTRIBUTION STANDARDS	
EXCAVATION AND CONDUIT	
DATE: 05/14/12	DWG. NO.: 160204
DWN BY: RG	APP. BY: MK
SCALE: NONE	SHEET 4 OF 5

6.7 THE CONTRACTOR SHALL, BEFORE PLACING FORMS OR DUCT LINES, CONFIRM THE SURFACE ON WHICH CONCRETE IS TO BE POURED IS UNDISTURBED ORIGINAL GROUND OR FIRMLY COMPACTED EARTH FREE FROM VOIDS, ROCK OR RUBBLE.

6.8 FORMS FOR DUCT SECTIONS SHALL BE PROVIDED IN ALL CASES WITH B.E.D. APPROVAL WHEN THE SOIL CONDITIONS ARE SUCH THAT THE TRENCH CAN BE EXCAVATED TO THE REQUIRED WIDTH AND DEPTH, LEAVING FIRM AND VERTICAL WALLS WHICH MAY SUITABLY EMPLOYED AS A SUBSTITUTE FOR FABRICATED FORMS.

6.9 DUCT ENVELOPE SHOULD BE SQUARE OR RECTANGULAR IN CROSS SECTION AND SHALL PROVIDE FOR 4 INCHES OF CONCRETE OVER THE OUTSIDE DUCTS.

6.10 WHERE LATERAL TAKEOFFS OF DUCTS FROM CONCRETE ENVELOPE ARE MADE, THE FORMS SHALL BE SLOTTED FOR THE INSTALLATION OF THE ELBOW WITH SLOTTED SHEET METAL FORM PLACED OVER ELBOW TO RETAIN CONCRETE DURING POUR. LATERAL TAKEOFF CONDUITS SHALL BE RIGIDLY SUPPORTED DURING POUR AND CURE.

7.0 INSPECTIONS:

7.1 ALL WORK IS SUBJECT TO INSPECTION AND APPROVAL OF B.E.D.. NON-COMPLYING CONSTRUCTION WILL BE BROUGHT INTO COMPLIANCE AS DIRECTED BY B.E.D. AT THE EXPENSE OF THE OWNER. IT IS THE RESPONSIBILITY OF THE INSTALLER TO NOTIFY B.E.D. PRIOR TO BACKFILLING. IF NOTICE IS NOT GIVEN, B.E.D. SHALL HAVE THE RIGHT TO REQUIRE ANY OR ALL WORK TO BE EXPOSED FOR VISUAL INSPECTION AT THE EXPENSE OF THE INSTALLER.

8.0 AS BUILT DRAWINGS

8.1 CONTRACTOR SHALL MAINTAIN AT THE JOB SITE A SEPARATE SET OF PLANS WHICH SHALL BE USED FOR AS BUILT RECORD ONLY.

8.2 A SET OF AS BUILT RECORDS SHALL BE GIVEN TO B.E.D. UPON COMPLETION OF THE JOB.

BURLINGTON ELECTRIC DEPT.	
DISTRIBUTION STANDARDS	
EXCAVATION AND CONDUIT	
DATE: 05/14/12	DWG. NO.: 160205
DWN BY: RG	APP. BY:
SCALE: NONE	SHEET 5 OF 5

CONDUIT USAGE CHART

LOCATION	MINIMUM ACCEPTABLE CONDUIT
LAWNS	SCHEDULE 40 PVC, UL LISTED, NON-CONCRETE ENCASED OR SCHEDULE 80 PVC, UL LISTED, NON-CONCRETE ENCASED
SIDEWALKS	SCHEDULE 80 PVC, UL LISTED, NON-CONCRETE ENCASED (OR EQUIVALENT STRENGTH) OR SCHEDULE 40 PVC, UL LISTED, ENCASED IN CONCRETE
DRIVEWAYS	SCHEDULE 80, UL LISTED, PVC NON-CONCRETE ENCASED OR EQUIVALENT STRENGTH USING DIRECTIONAL BORING WHENEVER POSSIBLE OR SCHEDULE 40 PVC, UL LISTED, ENCASED IN CONCRETE
PAVED AND NON PAVED AREAS SUBJECT TO VEHICULAR TRAFFIC	SCHEDULE 40 PVC, UL LISTED, ENCASED IN CONCRETE
RISERS, FIRST 10 (TEN) FEET ABOVE GRADE	SCHEDULE 80 PVC, UL LISTED
RISERS, AFTER FIRST 10 (TEN) FEET ABOVE GRADE	SCHEDULE 40 PVC, UL LISTED

BURLINGTON ELECTRIC DEPT.	
DISTRIBUTION STANDARDS	
CONDUIT IN TRENCH	
DATE: 05/14/12	DWG. NO.: 160301
DWN BY: RG	APP. BY: MF
SCALE: NONE	SHEET 1 OF 3

CABLES	2 1/2"	4"	5"	6"
1 – #2 PRIMARY, 15 KV	X			
3 – #2 PRIMARY, 15 KV		X		
1 – 4/0 PRIMARY 15 KV		X		
3 – 4/0 PRIMARY 15 KV		X		
3 – 350 PRIMARY, 15 KV			X	
1 – 750 MCM PRIMARY, 15 KV		X		
1 – 1000 MCM PRIMARY, 15 KV		X		
1/0 TRIPLEX SERVICE	X			
1/0 TRIPLEX SECONDARY		X		
1/0 QUADRAPLEX SERVICE	X			
4/0 TRIPLEX SERVICE	X			
4/0 TRIPLEX SECONDARY		X		
4/0 QUADRAPLEX SECONDARY OR SERVICE		X		
350 TRIPLEX SERVICE		X		
350 TRIPLEX SECONDARY		X		
350 QUADRAPLEX SECONDARY OR SERVICE		X		
500 TRIPLEX SECONDARY		X		
3–750 MCM PRIMARY 15 KV OR 35 KV				X
3–1000 MCM PRIMARY 15 KV				X

ALL BENDS SHALL BE MINIMUM 3 FOOT RADIUS.

BURLINGTON ELECTRIC DEPT.

DISTRIBUTION STANDARDS

CONDUIT IN TRENCH

DATE: 05/14/12	DWG. NO.: 160302
DWN BY: RG	APP. BY:
SCALE: NONE	SHEET 2 OF 3

CONDUITS SHALL BE CLEARED FREE OF ALL DEBRIS AND OBSTRUCTIONS PRIOR TO CABLE INSTALLATION. NEW CONDUIT INSTALLATIONS SHALL BE COMPLETE WITH PULL STRINGS INSTALLED PER STANDARD 1602. THE CABLE END SHALL BE SEALED WITH AN APPROVED END CAP DURING CABLE INSTALLATIONS. CABLES SHALL FEED INTO THE CONDUIT USING A SUITABLE GUIDE OR FEED TUBE. CABLES SHALL BE LIBERALLY COATED WITH APPROVED CABLE LUBRICANT CONTINUOUSLY AS CABLE IS FED INTO CONDUIT.

UL LISTED, SCHEDULE 40 AND SCHEDULE 80 PVC ARE NOT TO BE JOINED OR MIXED IN A CONDUIT RUN WITHIN THE TRENCH. THE CONDUITS HAVE THE SAME OUTSIDE DIAMETERS; HOWEVER, THE INSIDE DIAMETERS DIFFER. IF SCHEDULE 80 IS GOING TO BE USED, IT MIGHT BE MORE ECONOMICAL TO RUN IT THE ENTIRE DISTANCE.

ALL CONDUCTORS SHALL BE TAGGED IN TRANSFORMERS, UTILITY HOLES AND TERMINATING CABINETS DESIGNATING CABLE ORIGIN AND DESTINATION.

DAMAGED CABLE WITHIN THE CONDUIT SHALL BE REPLACED WITH NEW CABLE. SPLICED CABLE SHALL NOT BE INSTALLED IN CONDUIT.

FAULT INDICATORS SHALL NORMALLY BE USED ON ALL PRIMARY CABLES ON THE LOAD SIDE OF TERMINATING CABINETS OR LOOP FEED PADMOUNT TRANSFORMERS. SEE SECTION 1700 IN BED STANDARDS FOR FURTHER INFORMATION.

BURLINGTON ELECTRIC DEPT.	
DISTRIBUTION STANDARDS	
CONDUIT IN TRENCH	
DATE: 03/24/14	DWG. NO.: 160303
DWN BY: RG	APP. BY:
SCALE: NONE	SHEET 3 OF 3

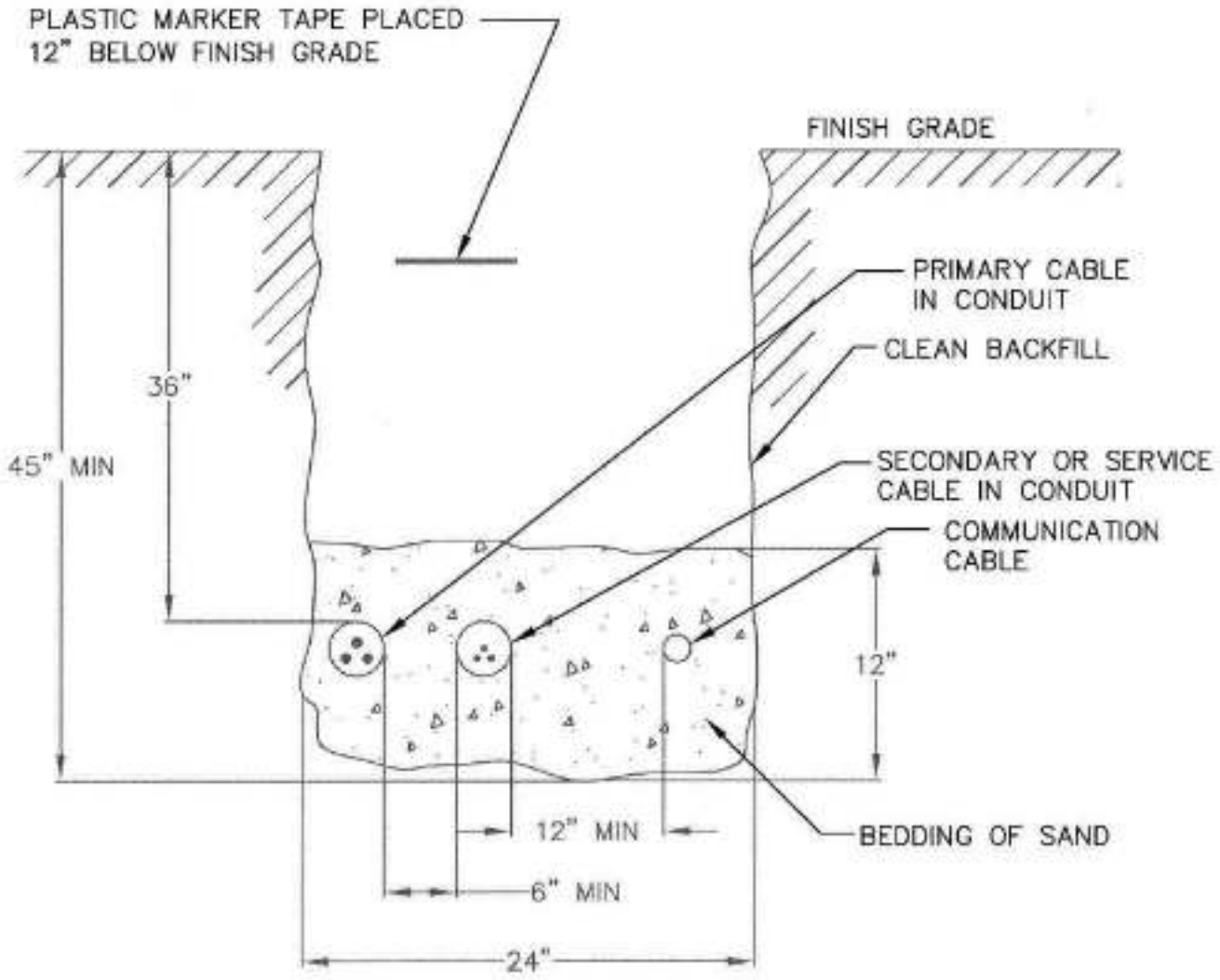

NOTES:

1. IN SOME CASES, PRIMARY AND SECONDARY (600V) CABLE DEPTHS MAY BE REDUCED IF ENCASED IN 6" OF CONCRETE, GRADE OF NO LESS THAN 4,000 PSI STRENGTH.
2. WHERE LEDGE IS ENCOUNTERED, MINIMUM DEPTHS MAY BE REDUCED TO 18" FOR PRIMARY AND SECONDARY CABLE ONLY WHEN CABLE IS INSTALLED IN CONDUIT ENCASED IN 6" OF CONCRETE, GRADE OF NO LESS THAN 5,000 PSI STRENGTH.
3. MOUNDING THE TRENCH TO GAIN SUITABLE CABLE DEPTH IS NOT PERMITTED.

BURLINGTON ELECTRIC DEPT.	
DISTRIBUTION STANDARDS	
TYPICAL TRENCH	
DATE: 03/10/11	DWG. NO.: 160401
DWN BY: RG	APP. BY: MK
SCALE: NONE	SHEET 1 OF 2

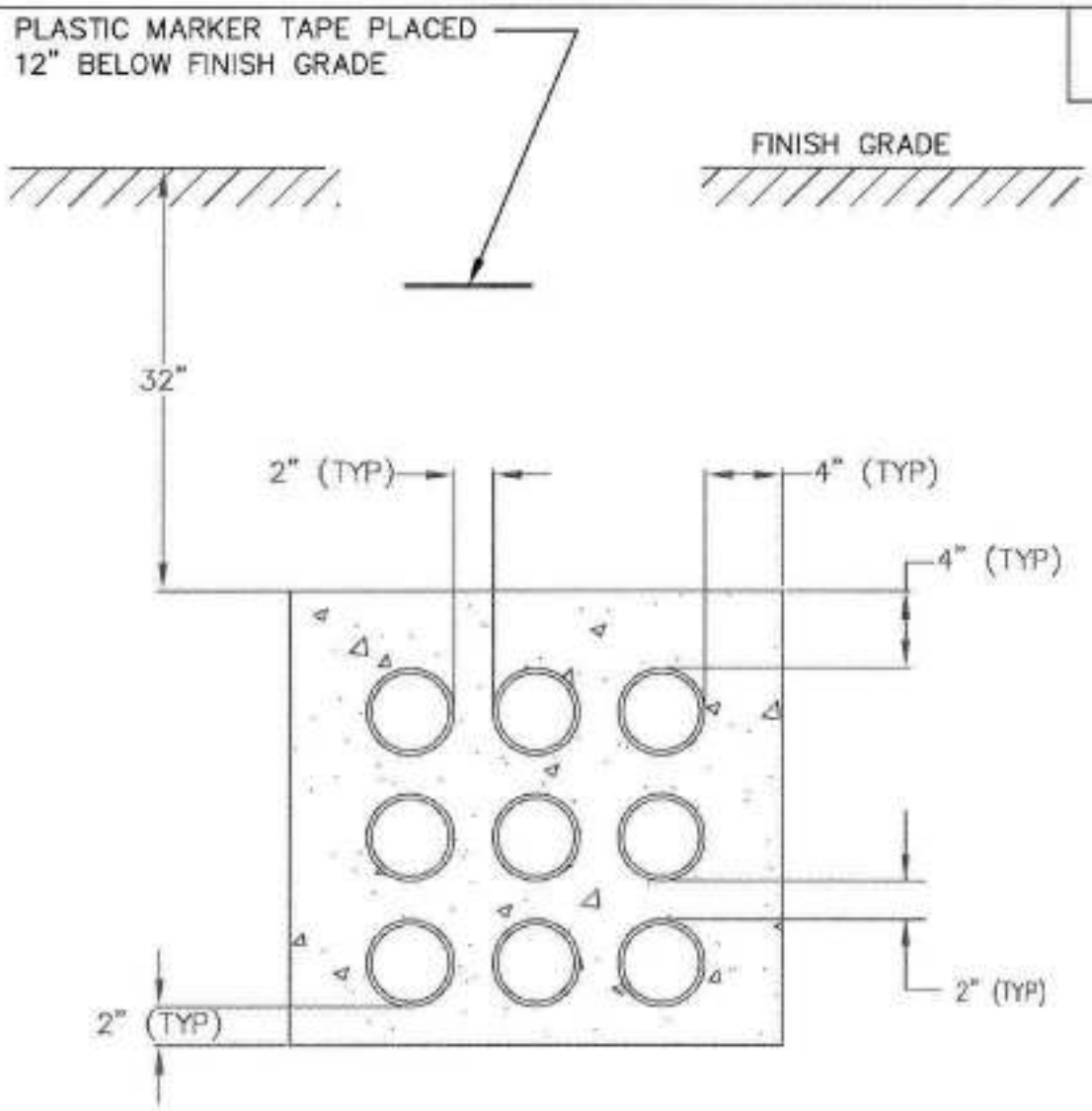

TYPICAL CONDUIT BANK CONSTRUCTION, CONCRETE ENCASED

NOTES:
1. ALL BED DUCTBANKS SHALL HAVE A TWO INCH (2") SPACING BETWEEN CONDUITS.

BURLINGTON ELECTRIC DEPT.	
DISTRIBUTION STANDARDS	
TYPICAL TRENCH	
DATE: 03/10/11	DWG. NO.: 160402
DWN BY: RG	APP. BY: MK
SCALE: NONE	SHEET 2 OF 2

1605

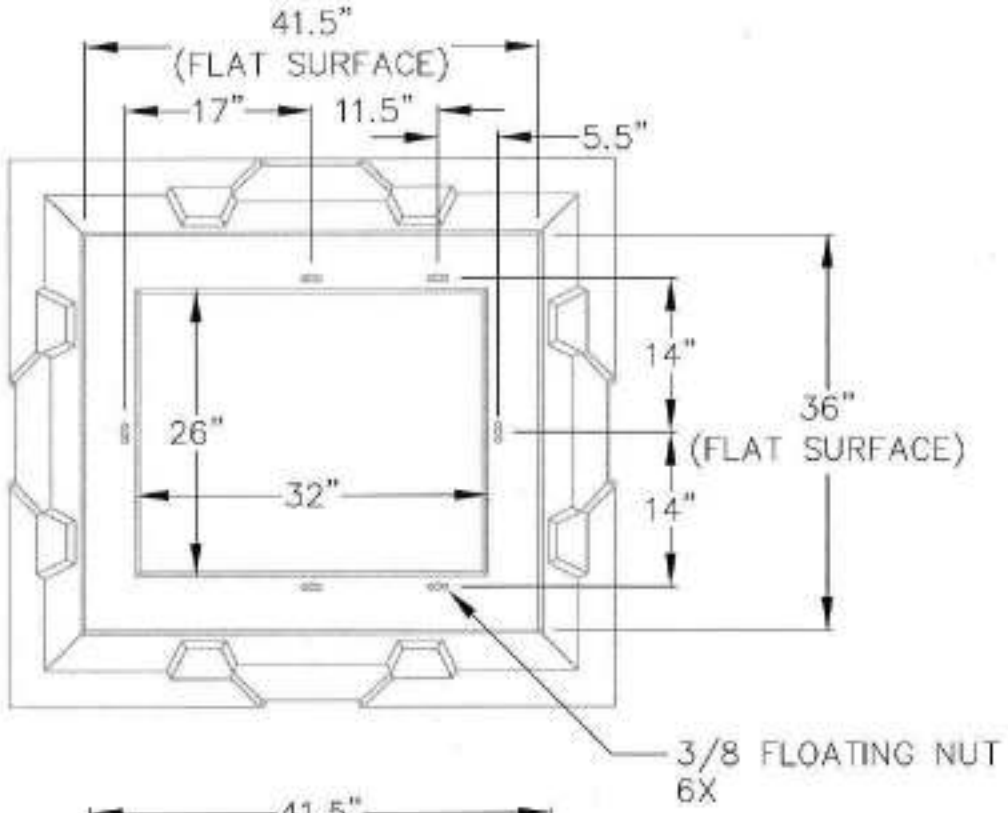

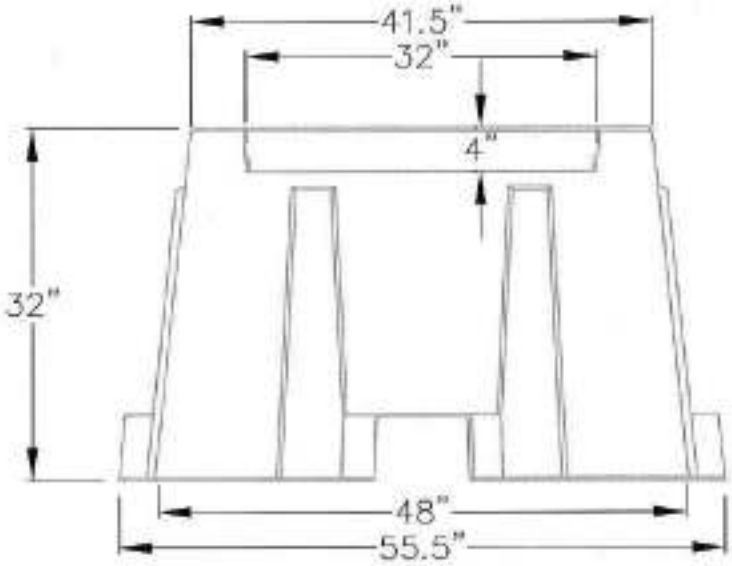

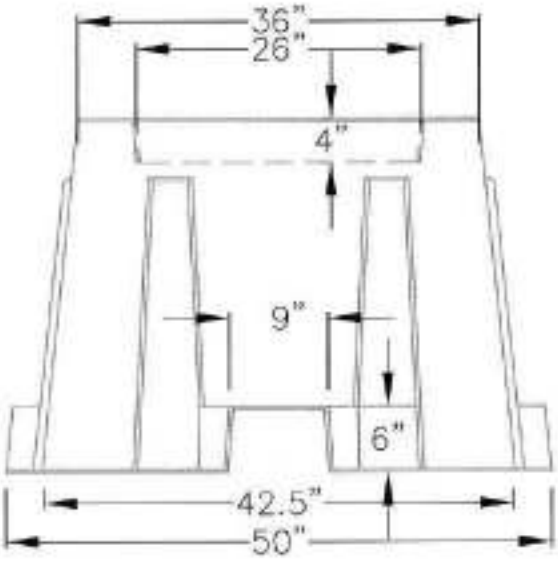

BURLINGTON ELECTRIC DEPT.	
DISTRIBUTION STANDARDS	
FIBERGLASS BOX SINGLE Ø TRANSFORMER SPECS & INSTALLATION	
DATE: 09/06/13	DWG. NO.: 160501
DWN BY: RG	APP. BY:
SCALE: NTS	SHEET 1 OF 3

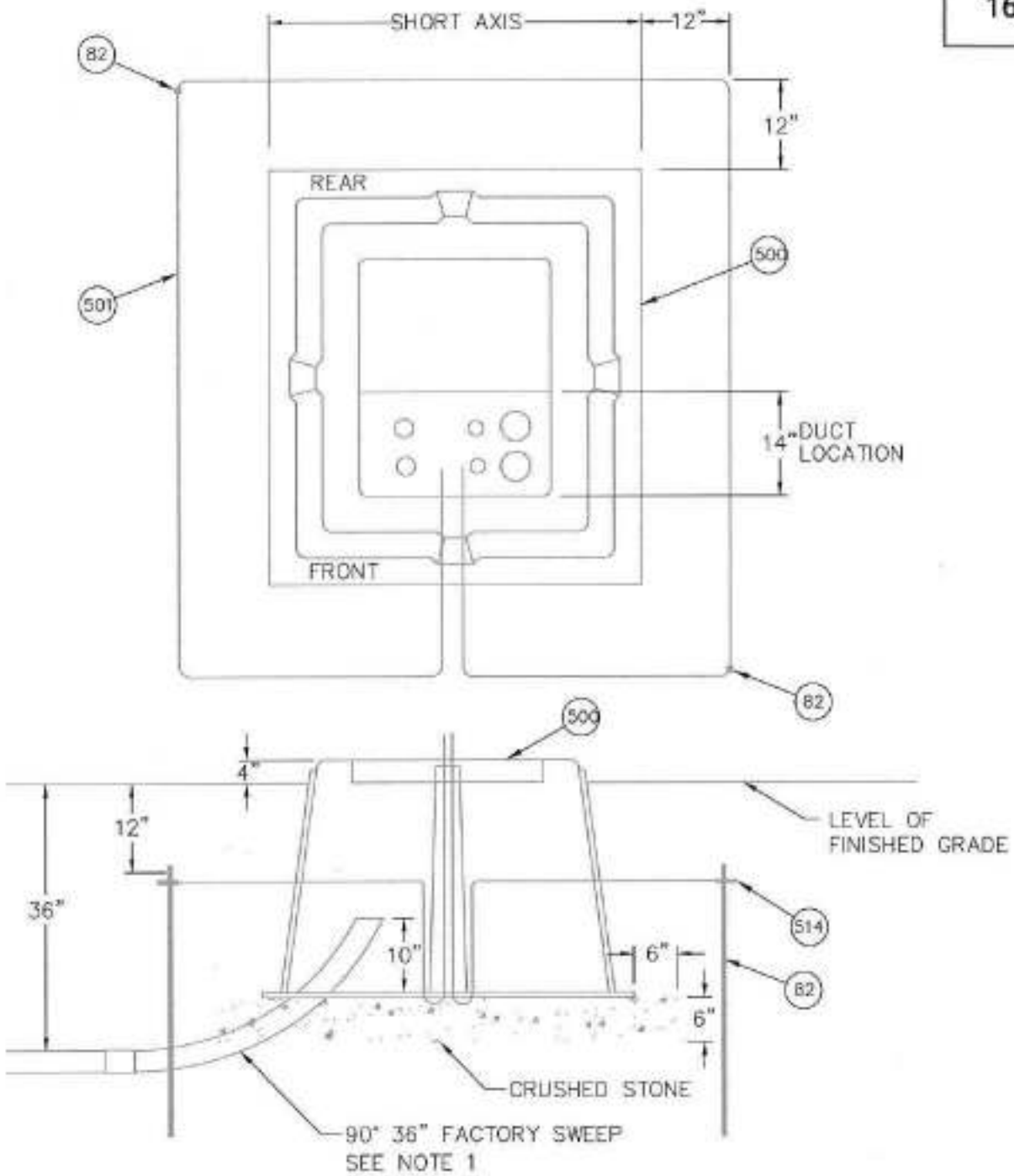

NOTES:

1. 90° 36" RADIUS BEND MUST BE USED.
2. A MINIMUM OF 6" CRUSHED STONE WILL BE PLACED UNDER BOX AND EXTEND 6" BEYOND THE PERIMETER OF BOX.
3. FINISHED GRADE SHALL BE A MINIMUM OF 4" BELOW TOP OF BOX.
4. BOXES USED FOR TRANSFORMERS OR TERMINATING POINTS SHALL HAVE A GROUND GRID INSTALLED.
5. CONDUITS WILL ENTER BOX IN THE FRONT 14 INCHES OF CLEAR OPENING.

BURLINGTON ELECTRIC DEPT.	
DISTRIBUTION STANDARDS	
FIBERGLASS BOX SINGLE Ø TRANSFORMER SPECS & INSTALLATION	
DATE: 09/06/13	DWG. NO.: 160502
DWN BY: RG	APP. BY:
SCALE: 1" = 16"	SHEET 2 OF 3

MATERIAL LIST

ITEM	QUANTITY	DESCRIPTION
82	2	GROUND ROD
500	1	FIBERGLASS BOX
501	40'	1/0 BARE STRANDED COPPER WIRE
514	2	GROUND ROD CONNECTOR

BURLINGTON ELECTRIC DEPT.	
DISTRIBUTION STANDARDS	
FIBERGLASS BOX SINGLE Ø TRANSFORMER SPECS & INSTALLATION	
DATE: 09/06/13	DWG. NO.: 160503
DWN BY: RG	APP. BY:
SCALE: NONE	SHEET 3 OF 3

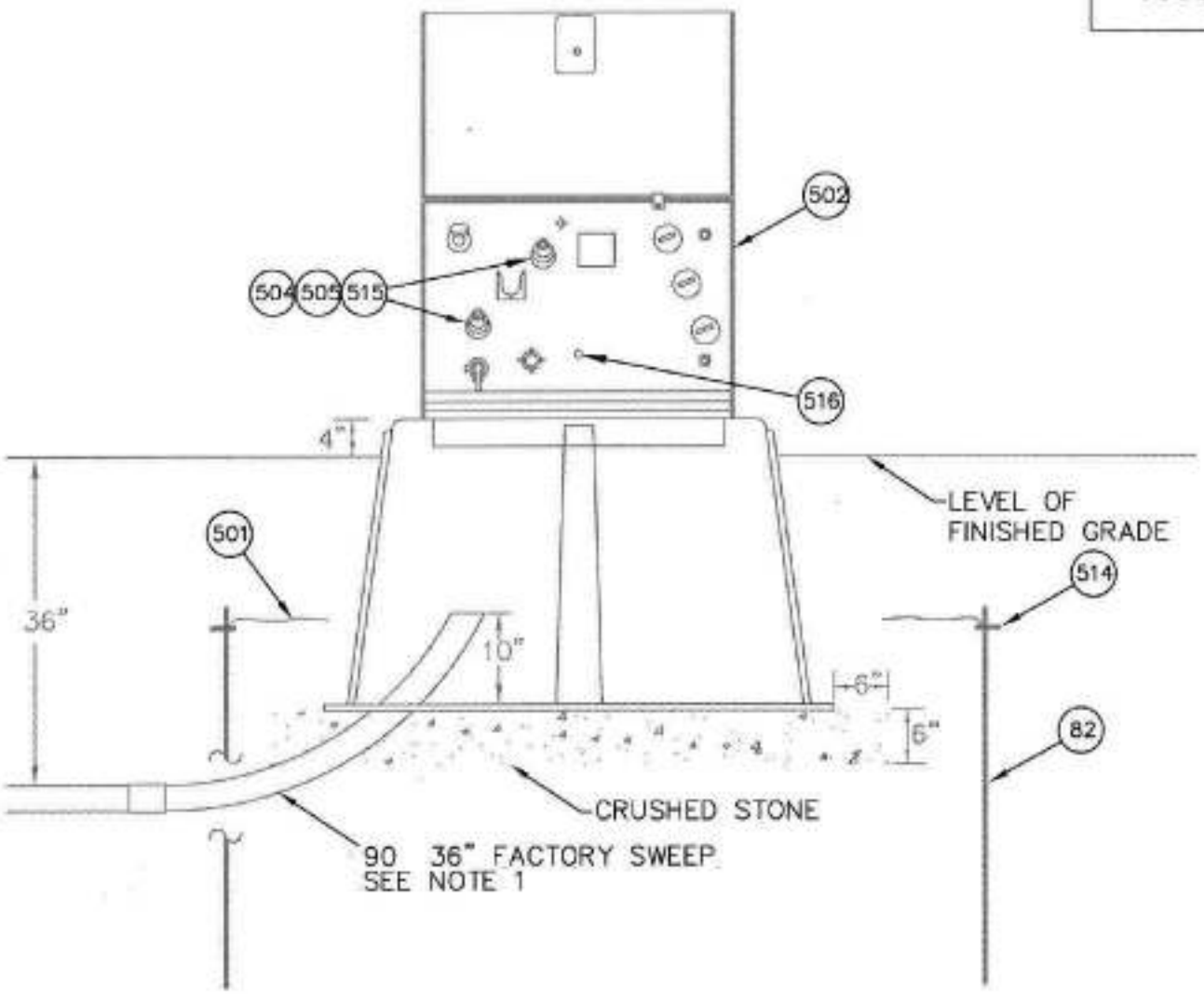

NOTES:

1. 90° 36" RADIUS BEND MUST BE USED.
2. A MINIMUM OF 6" CRUSHED STONE WILL BE PLACED UNDER BOX AND EXTEND 6" BEYOND THE PERIMETER OF BOX.
3. FINISHED GRADE SHALL BE A MINIMUM OF 4" BELOW TOP OF BOX.
4. BOXES USED FOR TRANSFORMERS OR TERMINATING POINTS SHALL HAVE A GROUND GRID INSTALLED.
5. CONDUITS WILL ENTER BOX IN THE FRONT 14 INCHES OF CLEAR OPENING.
6. INSTALL ARRESTER PER STANDARD 0703.

BURLINGTON ELECTRIC DEPT.	
DISTRIBUTION STANDARDS	
SINGLE Ø PADMOUNTED TRANSFORMER, DEAD FRONT	
DATE: 03/17/11	DWG. NO.: 160601
DWN BY: RG	APP. BY: MM
SCALE: 1" = 16"	SHEET 1 OF 2

MATERIAL LIST

ITEM	QUANTITY	DESCRIPTION
82	2	GROUND ROD
501	40'	1/0 BARE STRANDED COPPER WIRE
502	1	PAD MOUNT TRANSFORMER – SINGLE Ø
504	1	200 AMP LOADBREAK ELBOW
505	1	COLD SHRINK SEALING SLEEVE. #2–4/0
514	2	GROUND ROD CONNECTOR
515	2	SWITCH MODULE
516	1	GROUND LUG
	AS REQUIRED	SECONDARY CONNECTORS

OPTIONAL EQUIPMENT

504	AS REQUIRED	200 AMP LOADBREAK ELBOW
505	AS REQUIRED	COLD SHRINK SEALING SLEEVE, #2–4/0
507	AS REQUIRED	ELBOW ARRESTER
508	AS REQUIRED	BUSHING ARRESTER
509	AS REQUIRED	PARKING STAND ARRESTER
510	AS REQUIRED	INSULATED PARKING BUSHING
511	AS REQUIRED	INSULATED CAP
512	AS REQUIRED	LOADBREAK FEED–THRU INSERT

BURLINGTON ELECTRIC DEPT.	
DISTRIBUTION STANDARDS	
SINGLE Ø PADMOUNTED TRANSFORMER, DEAD FRONT	
DATE: 03/17/11	DWG. NO.: 160602
DWN BY: RG	APP. BY: RK
SCALE: NONE	SHEET 2 OF 2

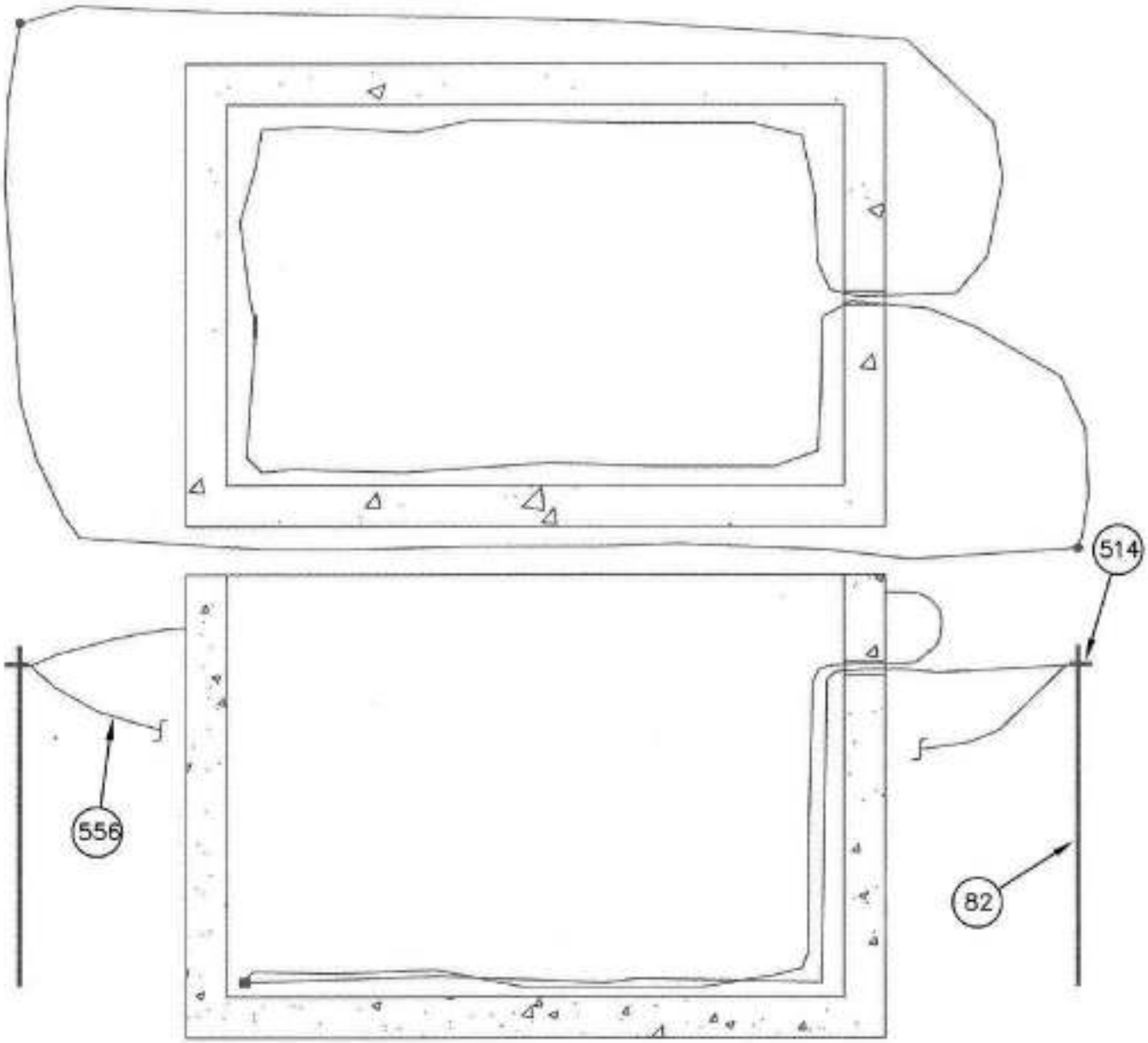

NOTE:
1. GROUND LOOP MUST BE CONTINUOUS.

BURLINGTON ELECTRIC DEPT.	
DISTRIBUTION STANDARDS	
UTILITY HOLE GROUNDING	
DATE: 03/10/11	DWG. NO.: 160901
DWN BY: CC	APP. BY: MK
SCALE: NONE	SHEET 1 OF 2

MATERIAL LIST

ITEM	QUANTITY	DESCRIPTION
82	2	GROUND ROD
514	2	GROUND ROD CONNECTOR
556	AS REQUIRED	4/0 BARE STRANDED COPPER WIRE

BURLINGTON ELECTRIC DEPT.	
DISTRIBUTION STANDARDS	
UTILITY HOLE GROUNDING	
DATE: 03/10/11	DWG. NO.: 160902
DWN BY: CC	APP. BY: MV
SCALE: NONE	SHEET 2 OF 2

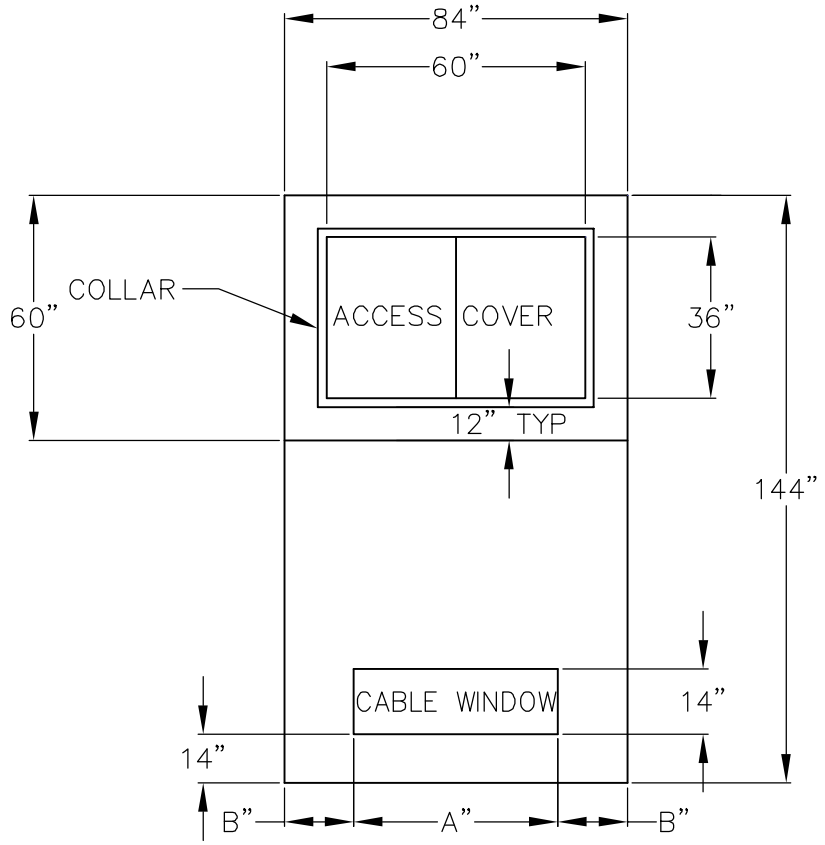

COVER DETAIL

WINDOW DIMENSION TABLE

	KVA	
	75 500	750 2500
A	48”	55”
B	18”	14.5”

NOTES:

1. PAD AND WELL TO BE CONSTRUCTED TO MEET REQUIREMENTS OF LOADING SPECIFICATION H-20 AND SUPPORT A TRANSFORMER WEIGHT OF 16,000 LBS.
2. SECONDARY CONDUIT QUANTITY AND SIZE TO BE DETERMINED BY CUSTOMER BASED ON B.E.D. STANDARD 1603.
3. PRIMARY CONDUIT QUANTITY AND SIZE TO BE DETERMINED BY B.E.D.
4. CONCRETE PAD SHALL HAVE A 3/4” CHAMFER ON ALL SIDES.
5. ACCESS COVER (36” X 60”), MEETING ANSI/SCTE 77-2007 TIER 22, TO BE PROVIDED BY B.E.D.
6. STONE BASE FOR VAULT TO BE 12” OF 3/4” CRUSHED STONE.
7. FINAL VAULT DRAWINGS MUST BE APPROVED BY BED ENGINEERING.

BURLINGTON ELECTRIC DEPT.	
DISTRIBUTION STANDARDS	
THREE Ø TRANSFORMER CONCRETE PAD	
DATE: 10/16/14	DWG. NO.: 162201
DWN BY: RG	APP. BY:
NONE	1 2

1622

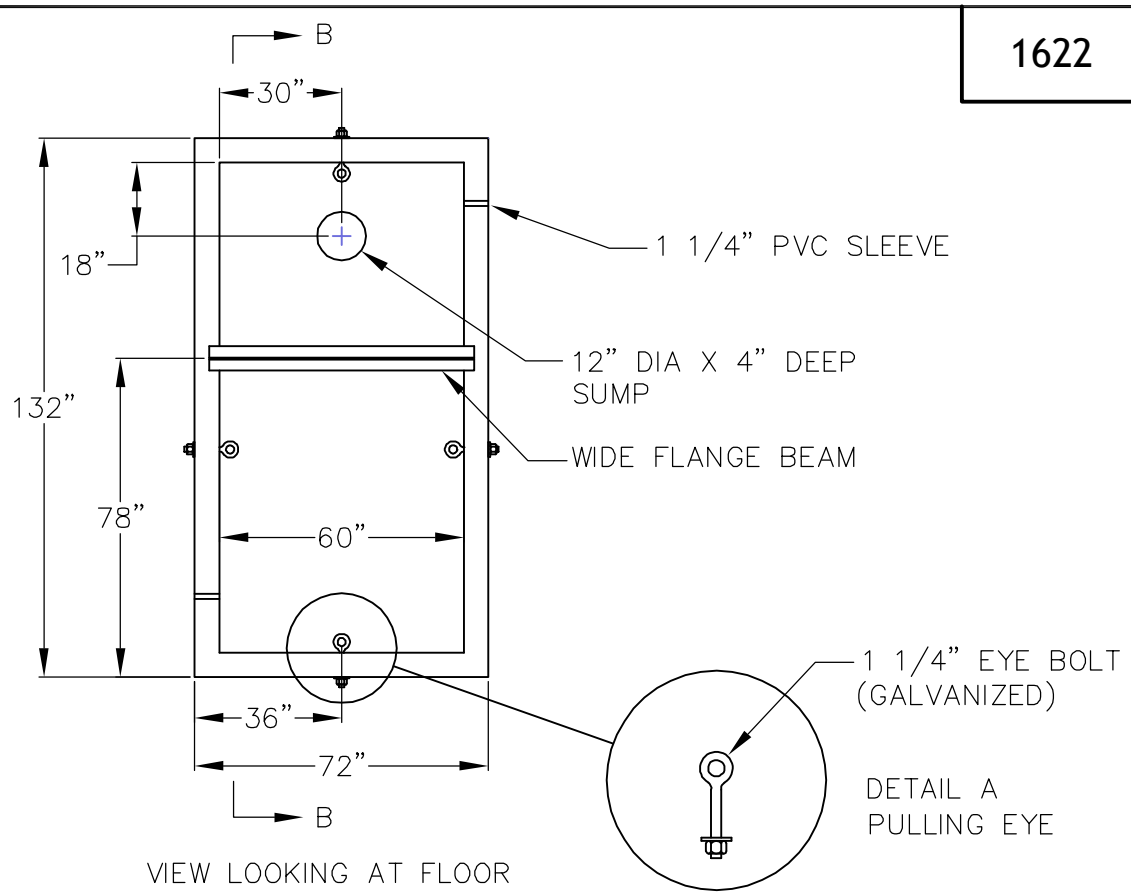

VIEW LOOKING AT FLOOR

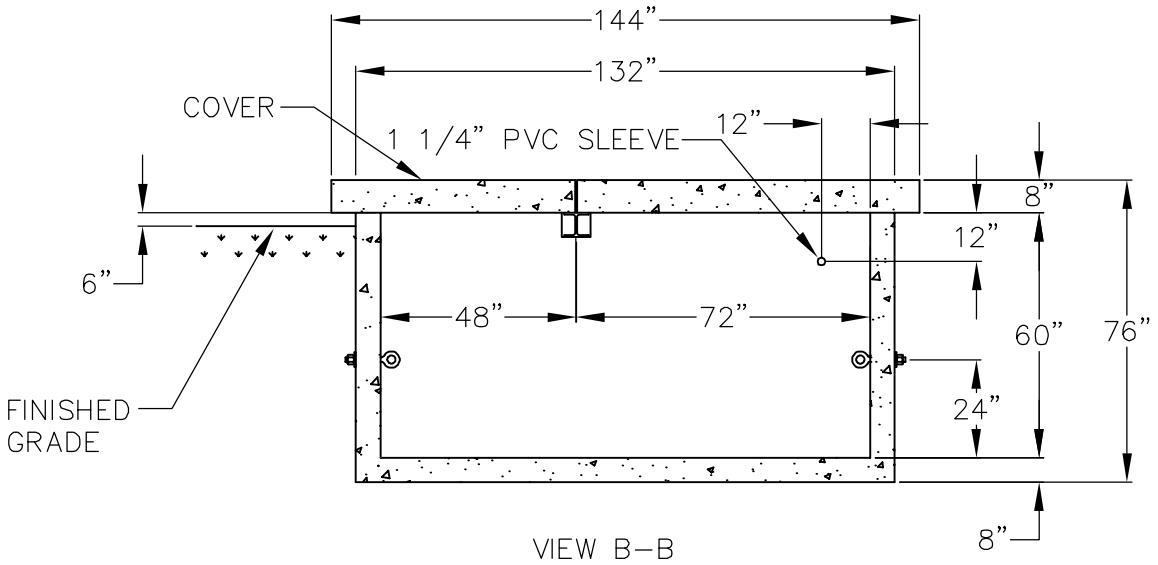

VIEW B–B

NOTES:

1. PULLING EYE LOCATIONS SHOWN ARE TYPICAL LOCATIONS, FINAL LOCATION/AMOUNT TO BE DETERMINED BY BED ENGINEERING. MASTIC IS TO BE PLACED BETWEEN WASHER AND VAULT WALL TO PREVENT WATER SEEPAGE.

BURLINGTON ELECTRIC DEPT.	
DISTRIBUTION STANDARDS	
THREE Ø TRANSFORMER PAD	
DATE: 07/30/14	DWG. NO.: 162202
DWN BY: RG	APP. BY:
NONE	2 2

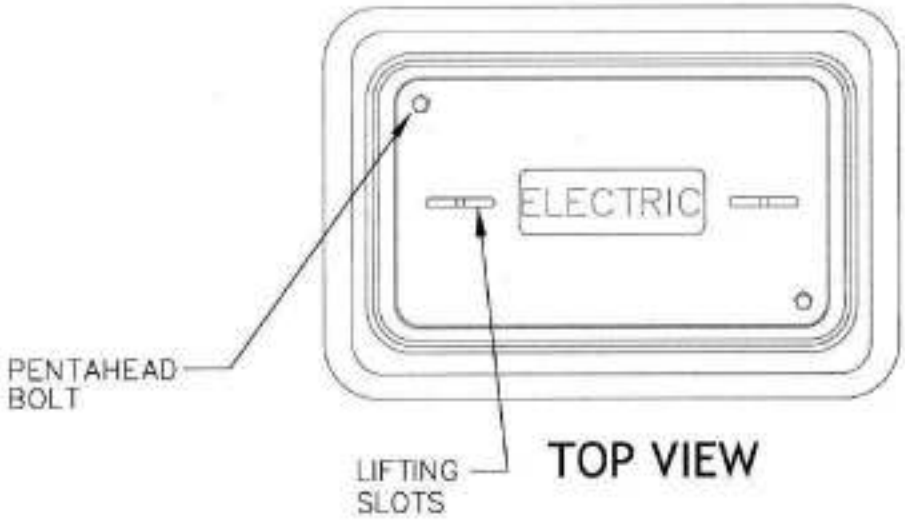

TOP VIEW

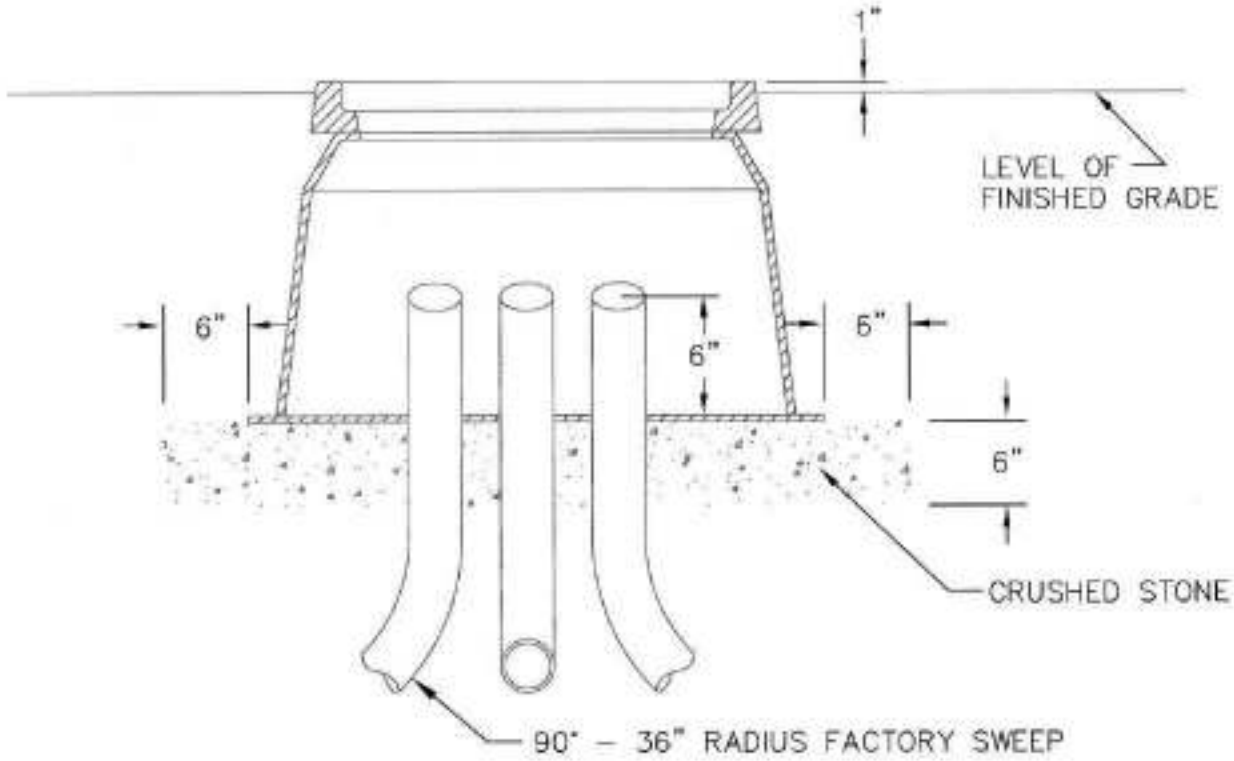

*SEE SHEET 2 FOR SPECIFICATIONS

BURLINGTON ELECTRIC DEPT.	
DISTRIBUTION STANDARDS	
UNDERGROUND ENCLOSURES	
DATE: 11/17/11	DWG. NO.: 162501
DWN BY: RG	APP. BY: MK
SCALE: 1" = 1'-0"	SHEET 1 OF 2

SPECIFICATIONS

1. ALL UNDERGROUND ENCLOSURES AND COVERS (CDR STYLES) INSTALLED IN THE GREENBELT/SIDEWALK SIZED (12"X17", 17"X30", 24"X36", AND 30"X60") SHALL MEET ANSI/SCTE77 2007 "Specifications for Underground Enclosures Integrity" TIER 22 (DRIVEWAY, PARKING LOT, AND OFF ROADWAY APPLICATIONS SUBJECT TO OCCASIONAL NON-DELIBERATE HEAVY VEHICULAR TRAFFIC). THE CDR BOXES AND COVERS SHALL BE PROVIDED BY BED.
2. ALL UNDERGROUND ENCLOSURES AND COVERS INSTALLED IN THE GREENBELT/SIDEWALK, SIZED LARGER THAN 30"X60", SHALL MEET AASHTO FULL H-20 LOADING (DELIBERATE VEHICULAR TRAFFIC APPLICATION), BE DESIGNED AND PROVIDED BY THE CONTRACTOR. DESIGN TO BE SIGNED AND SEALED BY A PROFESSIONAL ENGINEER. CDR STYLE ENCLOSURES SHALL NOT BE USED.
3. ALL UNDERGROUND ENCLOSURES AND COVERS (ANY SIZE) INSTALLED IN THE STREET SHALL MEET AASHTO FULL H-20 LOADING, BE DESIGNATED AND PROVIDED BY THE CONTRACTOR. DESIGN TO BE SIGNED AND SEALED BY A PROFESSIONAL ENGINEER. CDR STYLE ENCLOSURES SHALL NOT BE USED.
4. THE TOP OF EACH UNDERGROUND ENCLOSURE IN THE GRASS SHALL BE ONE INCH ABOVE FINISHED GRADE.
5. THE TOP OF EACH UNDERGROUND ENCLOSURE IN THE PAVEMENT/SIDEWALK SHALL BE FLUSH WITH FINISHED GRADE.
6. CONDUIT ENTRY INTO THE UNDERGROUND ENCLOSURES SHALL BE MADE BY USE OF CONDUIT SWEEPS.
7. EACH UNDERGROUND ENCLOSURE SHALL BE LEVEL AND REST ON A BEDDING OF COMPACTED CRUSHED STONE SIX INCHES IN DEPTH AND SHALL EXTEND A MINIMUM OF SIX INCHES BEYOND THE EDGE OF THE UNDERGROUND ENCLOSURE IN EACH DIRECTION PER BED STANDARD 1633.
8. THE CONTRACTOR SHALL CUT OFF THE TOPS OF THE SWEEPS INSIDE THE UNDERGROUND ENCLOSURES THREE INCHES ABOVE THE TOP OF THE STONE.
9. INTERNAL BRACING SHALL BE USED DURING THE INSTALLATION OF UNDERGROUND ENCLOSURES SIZED 30"X60" IN THE SIDEWALK AND GREENBELT. BRACING SHOULD BE 2X4'S HELD AT MID-DEPTH DURING THE INSTALLATION, COMPACTION, BACKFILLING AND IF HEAVY EQUIPMENT MAY BE PRESENT BY THE ENCLOSURE TO ENSURE MINIMAL SIDEWALL DEFLECTIONS.

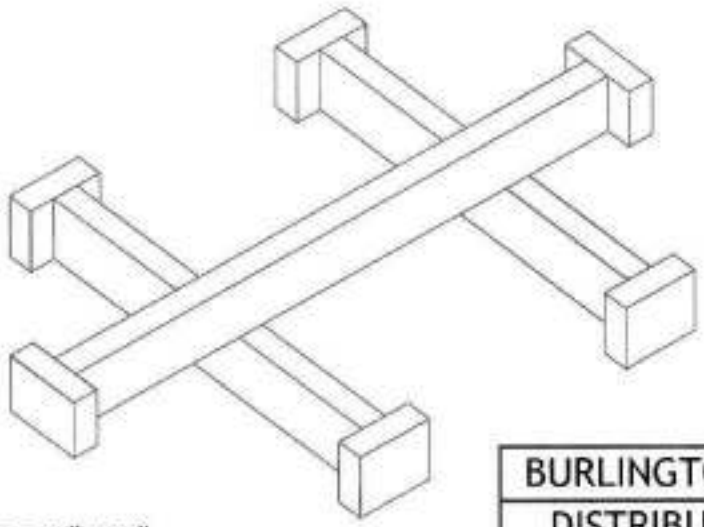

2X4'S BRACING FOR 30"X60" UNDERGROUND ENCLOSURE

BURLINGTON ELECTRIC DEPT.	
DISTRIBUTION STANDARDS	
UNDERGROUND ENCLOSURES	
DATE: 11/17/11	DWG. NO.: 162502
DWN BY: RG	APP. BY: MV
SCALE: 1" = 1'-0"	SHEET 2 OF 2

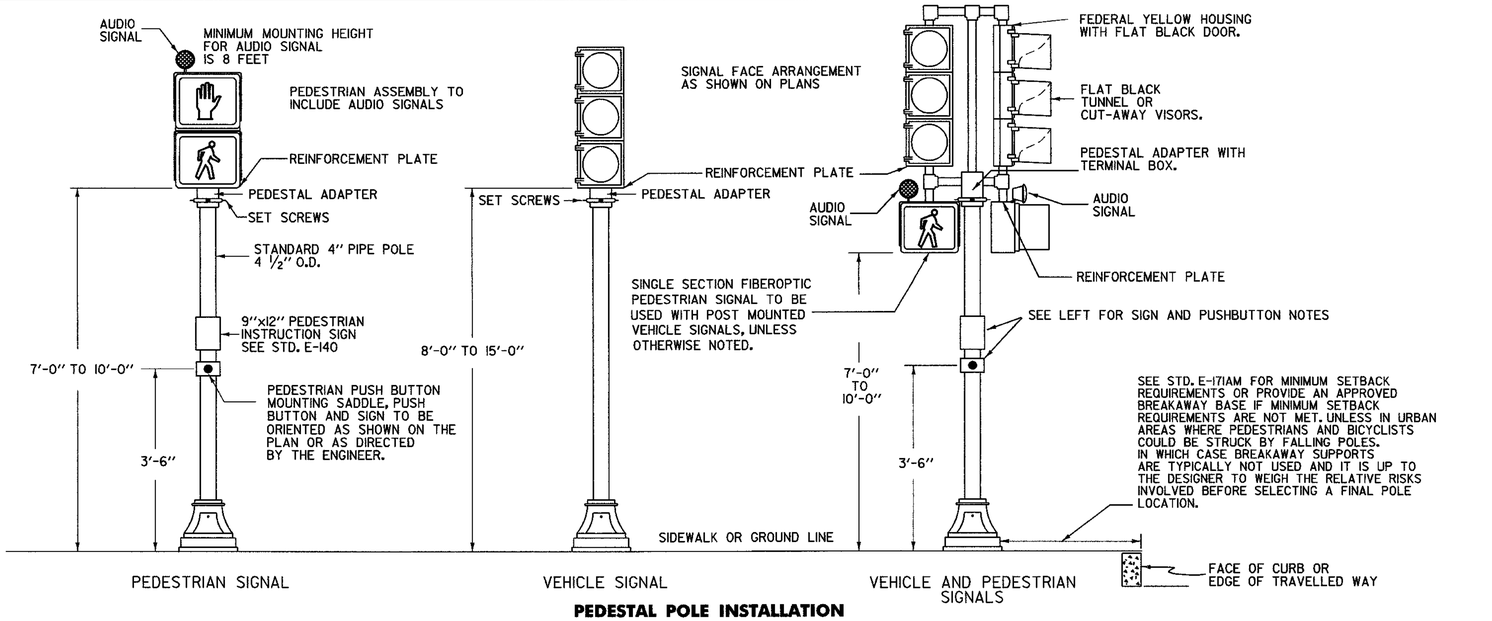

PEDESTAL POLE INSTALLATION

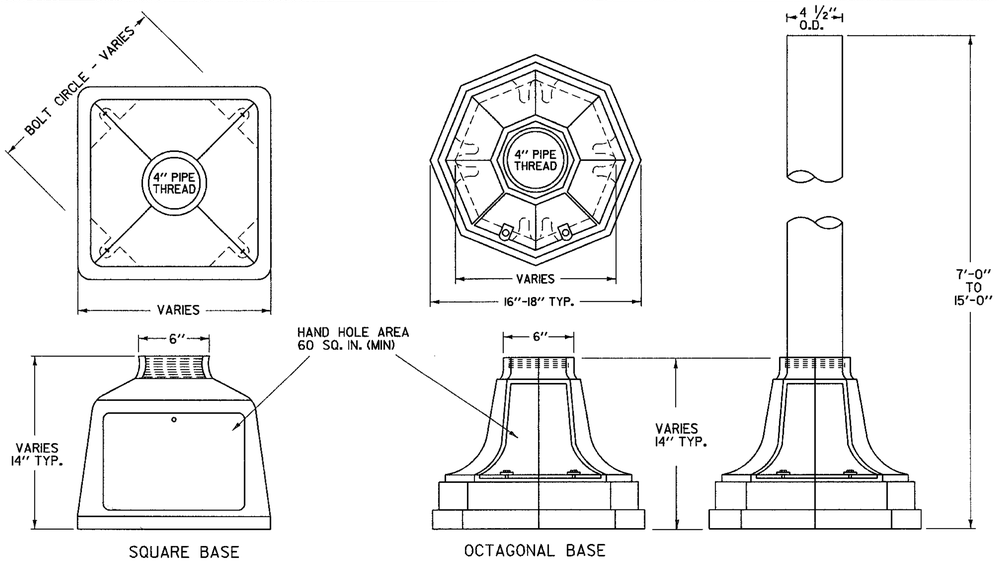

DIMENSIONS FOR PEDESTAL BASES VARY WITH DIFFERENT MANUFACTURERS. SQUARE OR OCTAGONAL BASE MAY BE USED UNLESS OTHERWISE NOTED ON THE PLANS.

DETAILS OF TRAFFIC SIGNAL PEDESTAL POST AND BASE

NOTES

1. REFER TO STANDARD E-171A FOR TRAFFIC SIGNAL GENERAL NOTES.
2. STEEL PEDESTAL POSTS AND BASES SHALL BE PAINTED FEDERAL YELLOW, AFTER GALVANIZATION. UNLESS OTHERWISE NOTED IN THE PLANS. ALUMINUM POSTS AND BASES SHALL HAVE A NATURAL ALUMINUM FINISH.
3. ALL PEDESTAL POLES WHICH ARE PROVIDED WITH A BREAKAWAY FEATURE SHALL CONFORM TO THE REQUIREMENTS OF THE AASHTO 1985 STANDARD SPECIFICATIONS FOR STRUCTURAL SUPPORTS FOR HIGHWAY SIGNS, LUMINAIRES, AND TRAFFIC SIGNALS, SECTION 7 AND SUBSEQUENT REVISIONS.
4. REFER TO STD E-171C FOR PEDESTRIAN PUSH BUTTON ACCESSIBILITY DETAILS.
5. PUSH BUTTON CONTROLS SHALL BE RAISED FROM OR FLUSH WITH THEIR HOUSINGS AND SHALL BE A MINIMUM OF 2" IN THE SMALLEST DIMENSIONS. THE FORCE REQUIRED TO ACTIVATE CONTROLS SHALL BE NO GREATER THAN 5 lbf

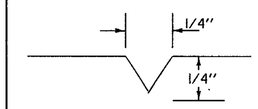

USED FOR CONDUIT LOCATION, SEE RIGHT "SECTION" DETAIL.

2" SCORE MARK DETAIL

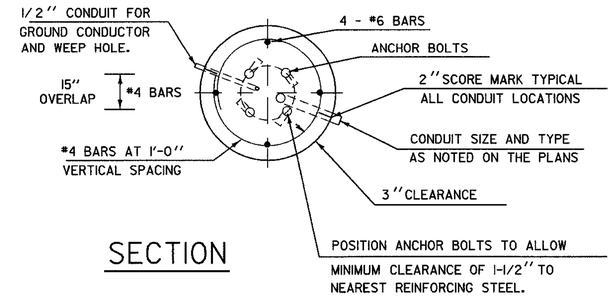

SECTION

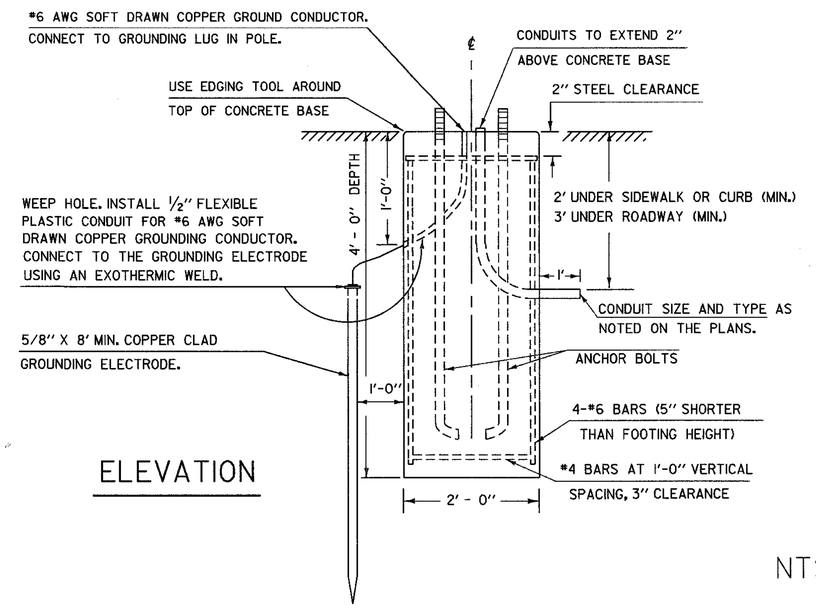

ELEVATION

NTS

DETAILS OF REINFORCED CONCRETE FOOTING FOR PEDESTAL POST

OTHER STDS. REQUIRED E - 140, E - 171A, E-171B, E-171C

REVISIONS AND CORRECTIONS

JUNE 21, 1989 - DATE OF ORIGINAL ISSUE
MAY 14, 1990 - FHWA COMMENTS
NOV. 17, 1993 - MISC. COMMENTS
AUG. 9, 1995 - CORRECTED BUTTON HEIGHT, ADDED NOTE 4, REVISED BASE GROUNDING & OTHER STDS REQUIRED.
NOV. 4, 1999 - CHANGED PED. POLE INSTALLATION NOTE. PER AASHTO SPECIFICATIONS

APPROVED

DIRECTOR OF PROJECT DEVELOPMENT

TRAFFIC CONTROL SIGNALS PEDESTAL POST MOUNTED

/traf/english/std/el70.dgn

VERMONT AGENCY OF TRANSPORTATION

STANDARD E-170

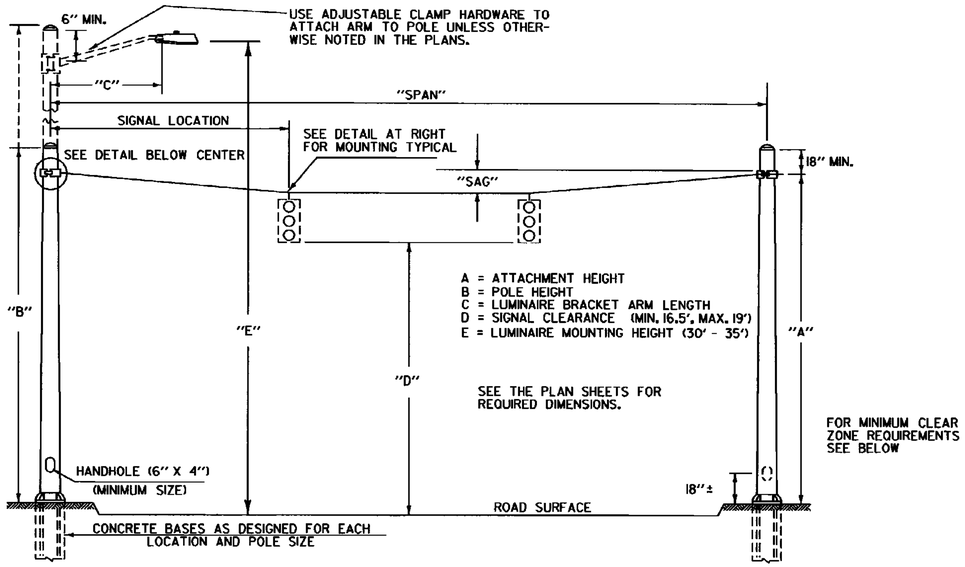

SPAN WIRE MOUNTED TRAFFIC SIGNALS WITH LUMINAIRES

NOTES

1) ALL TRAFFIC SIGNAL EQUIPMENT SHALL MEET OR EXCEED ALL REQUIREMENTS OF THE LATEST REVISION OF THE NATIONAL ELECTRICAL MANUFACTURERS ASSOC. (NEMA) AND THE INTERNATIONAL MUNICIPAL SIGNAL ASSOC. (IMSA) STANDARDS FOR TRAFFIC CONTROL SYSTEMS.

2) ALL ELECTRICAL WIRE AND CABLE SHALL BE COPPER. ELECTRICAL SIGNAL CABLE FROM TRAFFIC SIGNAL CONTROLLER TO SIGNAL HEADS SHALL BE COMPOSED OF AWG # 12 (MIN) STRANDED CONDUCTORS, AND SHALL MEET IMSA WIRE AND CABLE SPECIFICATIONS.

3) ALL SIGNAL HEAD CABLES SHALL BE CONTINUOUS FROM THE CONTROLLER TO THE NEAREST SIGNAL HEAD TO WHICH THEY APPLY. THE CABLE SHALL ALSO BE CONTINUOUS FROM THE FIRST SIGNAL HEAD TO ANY ADDITIONAL HEADS WITH TERMINATION IN THE DISCONNECT HANGER.

4) THE PEDESTRIAN SIGNAL HEADS SHALL HAVE AUDIO SIGNALS TO INDICATE ALLOWABLE PEDESTRIAN MOVEMENT FOR THE VISUALLY IMPAIRED DURING THE PEDESTRIAN PHASE. THEY SHALL BE OF THE TYPE NORMALLY USED FOR SUCH AN INSTALLATION AND BE WIRED IN SUCH A WAY AS TO BE EASILY DEACTIVATED. AFTER THE AUDIO SIGNAL HAS BEEN INSTALLED AND FIELD TESTED IT SHALL BE DEACTIVATED, UNLESS AN EXCLUSIVE PEDESTRIAN PHASE IS OPERATING AT THE INTERSECTION. PEDESTRIAN PUSH BUTTONS SHALL BE INSTALLED AT EACH END OF EACH CROSSWALK WHERE ACTUATED PEDESTRIAN SIGNALS ARE INSTALLED OR AS SHOWN ON THE PLANS.

5) THE PEDESTRIAN HEADS SHALL HAVE TEXT ''WALK'', ''DONT WALK'', UNLESS OTHERWISE NOTED. THEY SHALL MEET THE LATEST REQUIREMENTS OF THE MANUAL ON UNIFORM TRAFFIC CONTROL DEVICES (MUTCD).

6) WHEN STREET LIGHTS ARE INSTALLED ON A TRAFFIC SIGNAL STRAIN POLE, AND THE STREET LIGHTING ITEM IS NOT PART OF THE CONTRACT, THE LUMINAIRES AND BRACKET ARMS ARE INCLUDED UNDER THE TRAFFIC CONTROL SIGNAL ITEM. THEY SHALL MEET ALL OF THE REQUIREMENTS OF SECTION 679 OF THE CURRENT VERMONT STANDARD SPECIFICATIONS FOR CONSTRUCTION.

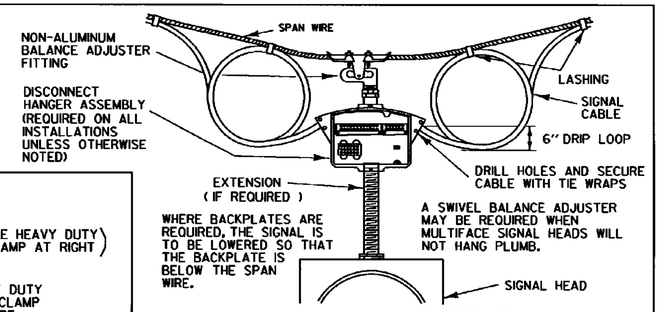

SPAN WIRE MOUNTING TYPICAL

7) SIGNAL TIMING IS APPROXIMATE AND IS NOT TO BE CONSIDERED FINAL. ALL NECESSARY HARDWARE TO CHANGE THE TIMING SHALL BE ON HAND WHEN THE SIGNALS ARE ACTIVATED. THE RESIDENT ENGINEER SHALL PERFORM CHECKS DURING THE AM AND PM PEAK PERIODS TO INSURE OPTIMUM SETTINGS. IF REQUIRED, APPROPRIATE TIMING CHANGES SHALL BE MADE TO ''FINE-TUNE'' THE CONTROLLER TO ITS BEST EFFICIENCY PRIOR TO COMPLETION OF THE PROJECT. TIMING CHANGES WILL BE APPROVED BY A REPRESENTATIVE OF THE V.A.O.T. TRAFFIC AND SAFETY DIVISION. TIMING ADJUSTMENTS SHALL BE SUBSIDIARY TO THE TRAFFIC CONTROL SIGNAL ITEM. MINOR TIMING CHANGES MADE TO ''FINE-TUNE'' THE CONTROLLER WILL NOT AFFECT THE RUNNING OF THE 30 DAY TEST PERIOD.

8) THE TRAFFIC SIGNAL STRAIN POLES SHALL BE BACK RAKED BEFORE THE WIRES AND SIGNALS ARE INSTALLED SO THAT THE POLES WILL BE PLUMB WHEN DEAD LOAD DEFLECTION DUE TO SPAN WIRE AND SIGNAL HEADS OCCURS. THE AMOUNT OF BACK RAKE SHALL BE AS SHOWN ON THE PLANS.

9) THE SIGNAL SYSTEM SHALL NOT OPERATE WITHOUT THE APPROPRIATE PAVEMENT MARKINGS AND RELATED SIGNING IN PLACE.

10) THE SIGNAL HEADS SHALL BE COVERED WITH AN OPAQUE COVERING UNTIL SUCH TIME AS THE SIGNAL SYSTEM IS FUNCTIONAL. AT NO TIME SHOULD THE HEADS BE VIEWED WITHOUT HAVING SOME FORM OF SIGNAL INDICATION, I.E. FLASHING OPERATION OR SEQUENCING AS PER PLAN.

11) THE CONFLICT MONITOR SHALL BE CAPABLE OF DETECTING A LACK OF RED, GREEN, YELLOW OR WALK SIGNAL AND SHALL BE CAPABLE OF STORING AT LEAST NINE PREVIOUS FAULTS FOR RECALL VIA A DISPLAY SCREEN.

12) THE VEHICLE DETECTOR AMPLIFIERS AND PHASE MODULES (WHERE APPROPRIATE) INSIDE THE CONTROLLER CABINET SHALL HAVE LABELS TO INDICATE WHICH PHASE AND MOVEMENT GOES WITH EACH. THE LABELS SHALL BE 1/2'' WIDE. THE LOOP DETECTOR LEAD-INS SHALL ALSO BE LABELED AT THE TERMINAL BOARD AS TO WHICH MOVEMENT AND LANE THEY ARE FROM. VEHICLE DETECTOR AMPLIFLIERS SHALL BE OF A TYPE THAT FAIL IN THE ''ON'' POSITION.

13) TEST SWITCHES FOR EACH PHASE SHALL BE PLACED EITHER ON THE CABINET DOOR OR IN A CONVENIENT LOCATION ON THE SIDE WALL.

14) ALL DOOR MOUNTED SWITCHES AND BUTTONS SHALL BE PROTECTED FROM ACCIDENTAL BUMPING OR FROM COMING INTO CONTACT WITH OTHER EQUIPMENT WHEN THE DOOR IS CLOSED.

15) ALL SIGNALS SHALL BE WIRED SUCH THAT NO MORE THAN TWO THROUGH FACES (NORTH-SOUTH AND/OR EAST-WEST) ARE WIRED INTO ONE LOAD SWITCH EVEN THOUGH TWO APPROACHES ARE GREEN DURING THE SAME PHASE.

16) THE CONTRACTOR SHALL PROVIDE A MINIMUM OF TWO COPIES OF THE INSTRUCTION MANUALS FOR THE CONTROLLER, LOOP DETECTORS, CONFLICT MONITORS, AND ANY OTHER EQUIPMENT INCLUDED IN THE CABINET. ONE COPY IS TO BE KEPT IN THE CABINET AND THE OTHER GIVEN TO THE PARTY RESPONSIBLE FOR MAINTENANCE OF THE SIGNAL SYSTEM. ADDITIONAL COPIES TO BE PROVIDED AS CALLED FOR ON THE PLANS.

17) FOR PROGRAMMABLE SOLID STATE CONTROLLERS AND MASTERS, COPIES OF THE FINAL PROGRAM LISTINGS SHALL BE PROVIDED AND DISTRIBUTED AS DETAILED IN NOTE 16.

18) PHASING CHANGES, IF REQUESTED AND FEASIBLE, SHALL BE CONSIDERED AS PART OF THE CONTRACT. EXTRA COMPENSATION FOR THE CHANGES MAY BE AUTHORIZED FOLLOWING APPROVAL OF THE ESTIMATE.

19) TRAFFIC SIGNALS INSTALLED AT NEW LOCATIONS SHALL BE ACTIVATED ONLY UPON THE APPROVAL OF THE ENGINEER AND AFTER FLASHING FOR A MINIMUM OF 48 HRS.

20) IF THE PROJECT INVOLVES REPLACING OR IMPROVING AN EXISTING TRAFFIC SIGNAL, TRAFFIC SHALL BE CONTROLLED BY A UNIFORMED TRAFFIC OFFICER AT ANY TIME THE SIGNAL IS NOT SEQUENCING PER PLAN OR OPERATING ON FLASH. THE SWITCH FROM THE OLD TO THE NEW SIGNAL SHALL BE DONE DURING OFF-PEAK TRAFFIC AND IN SUCH A WAY AS TO MINIMIZE DOWN TIME.

21) TRAFFIC & PEDESTRIAN SIGNALS MOUNTED ON THE SIDE OF THE SIGNAL POLES MAY BE ATTACHED BY METHODS OTHER THAN THOSE SHOWN. SHOP DRAWINGS FOR THE ALTERNATE MOUNTING HARDWARE MUST BY SUBMITTED TO THE TRAFFIC DESIGN SECTION OF THE VAOT VIA THE RESIDENT ENGINEER FOR APPROVAL PRIOR TO CONSTRUCTION.

22) ALL RIGIDLY MOUNTED TRAFFIC AND PEDESTRIAN SIGNAL HEADS (POST TOP, SIDE OR ARM MOUNTED) SHALL BE HEAVY DUTY ALUMINUM, UNLESS OTHERWISE NOTED ON THE PLANS.

23) WHEN (FREE SWINGING) OPTICALLY PROGRAMMABLE SIGNAL HEADS ARE REQUIRED, THEY SHALL NOT BE INSTALLED ON THE SAME HANGER ASSEMBLY AS LIGHTER WEIGHT HEADS, UNLESS OTHERWISE NOTED ON THE PLANS. WHEN TWO HANGER ASSEMBLIES ARE INSTALLED CLOSE TOGETHER, THE BOTTOM OF THE SIGNALS SHALL BE CONNECTED BY A FLAT ARM ASSEMBLY TO PREVENT THE HEADS FROM HITTING EACH OTHER.

24) WHEN MASKING OF OPTICALLY PROGRAMMABLE SIGNAL HEADS IS REQUIRED, THE HEADS SHALL BE RIGIDLY MOUNTED OR TETHERED, AS SHOWN ON STD E-171B.

25) WHEN STREET LIGHTING AND SIGNALS ARE INSTALLED AT THE SAME LOCATION, THE POWER FOR EACH SHALL BE SEPARATED AT THE STANCHION OR SERVICE.

26) WHEN MORE THAN ONE SIGNAL IS POWERED FROM THE SAME SERVICE, EACH SHALL HAVE ITS OWN DISCONNECT AT THE STANCHION.

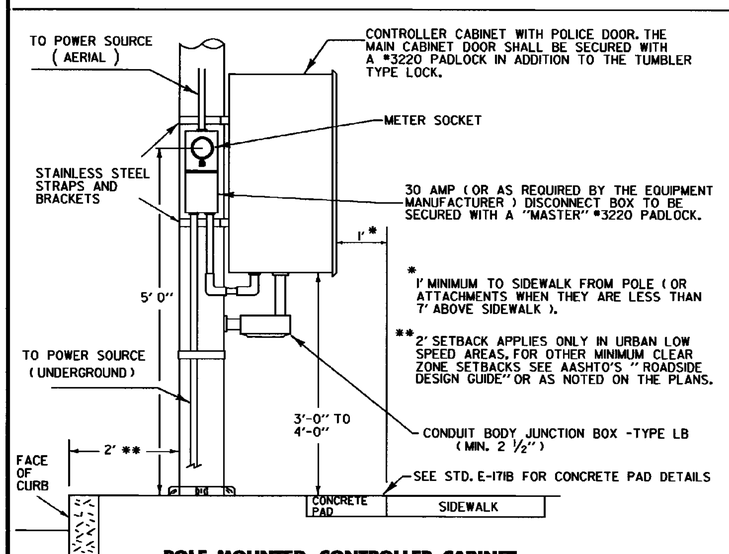

POLE MOUNTED CONTROLLER CABINET INSTALLATION TYPICAL

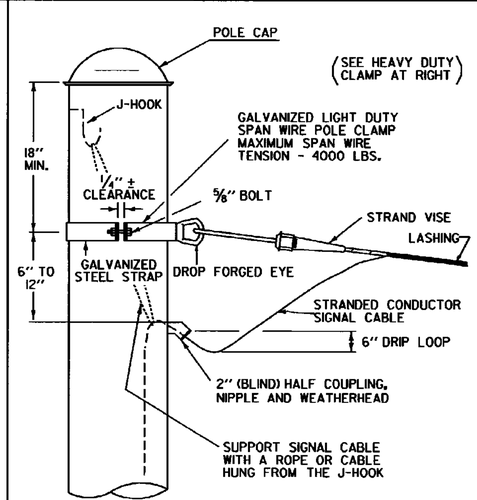

CABLE INSTALLATION TYPICAL WITH SPAN WIRE POLE CLAMP
(LIGHT DUTY GALVANIZED)

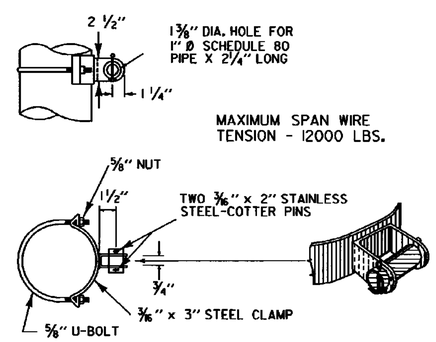

SPAN WIRE CLAMP
(HEAVY DUTY GALVANIZED)

OTHER STDS. REQUIRED E - 171B, E - 175

REVISIONS AND CORRECTIONS

JUNE 21, 1989 - DATE OF ORIGINAL ISSUE
MAY 14, 1990 - FHWA COMMENTS
NOV. 17, 1993 - FHWA COMMENTS, NOTE REVISIONS AND POLE MOUNTING DETAIL MOVED TO E-171B
AUG. 9, 1995 - GENERAL REVISION OF NOTES & DETAILS

APPROVED FOR THIS PROJECT AND/OR DESIGN IMPLEMENTATION. FHWA FINAL APPROVAL PENDING.

APPROVED

DIRECTOR OF ENGINEERING

TRAFFIC AND SAFETY ENGINEER

TRAFFIC CONTROL SIGNALS GENERAL NOTES & DETAILS

/traf/std/stdel71a.dgn - stdel71a.1

VERMONT AGENCY OF TRANSPORTATION

STANDARD

E-171A

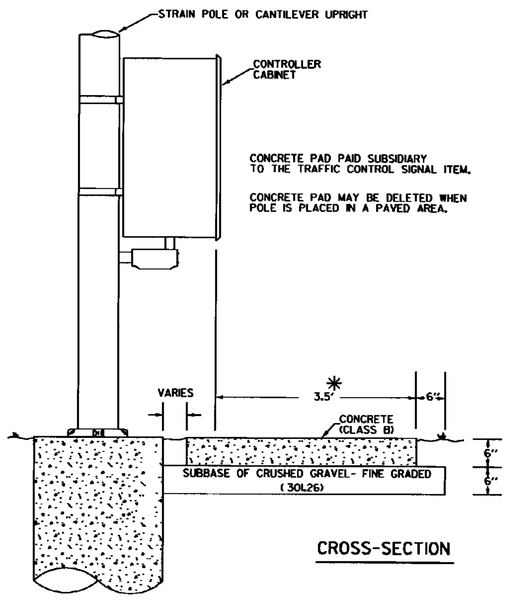

CROSS-SECTION

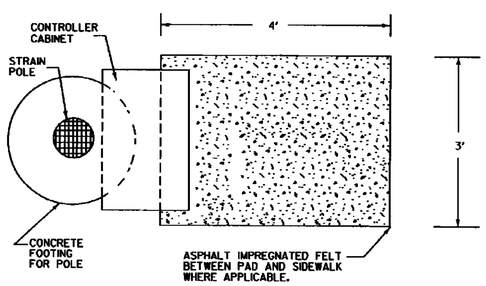

TOP VIEW

NTS

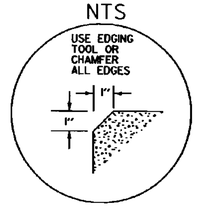

* THE 3.5 FOOT DIMENSION MAY BE ADJUSTED AS NECESSARY WHERE SIDEWALK OR ROADWAY IS ADJACENT TO CONTROLLER.

CONCRETE PAD DETAIL FOR POLE MOUNTED CONTROLLER CABINET

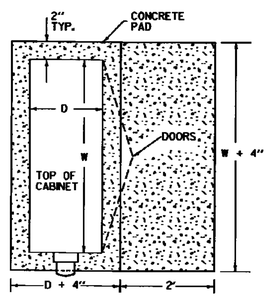

TOP VIEW

THE CABINET DIMENSIONS "D" AND "W" VARY WITH MANUFACTURER. A TYPICAL "P" CABINET HAS DIMENSIONS OF D = 26" AND W = 46".

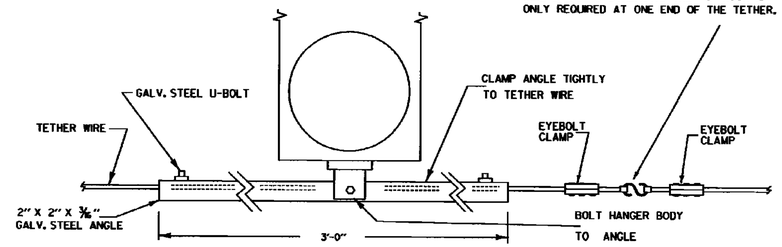

OPTICALLY PROGRAMMED SIGNAL HEAD WHEN MASKING IS REQUIRED

TETHER WIRE ATTACHMENT DETAILS

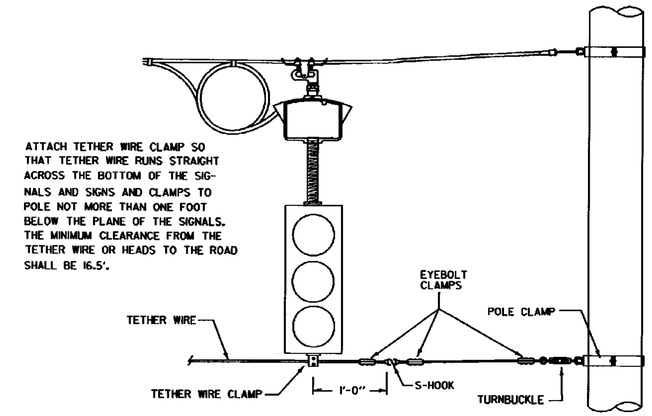

STANDARD OR UNMASKED OPTICALLY PROGRAMMED SIGNAL HEAD

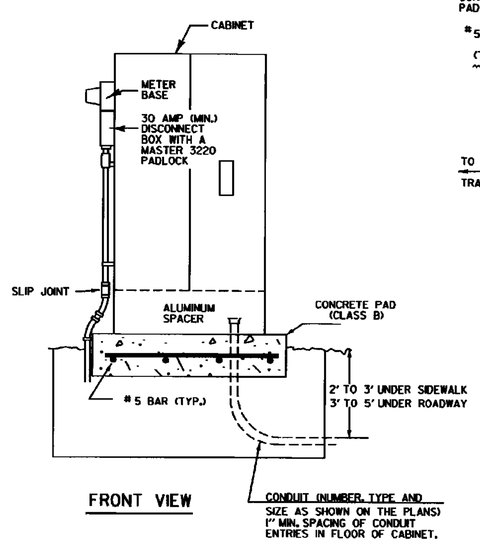

FRONT VIEW

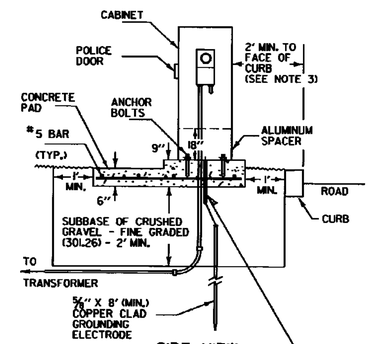

SIDE VIEW

WEEP HOLE. INSTALL 1/2" FLEXIBLE PLASTIC CONDUIT FOR #6 AWG SOFT DRAWN COPPER GROUNDING CONDUCTOR. CONNECT TO GROUNDING ELECTRODE USING AN EXOTHERMIC WELD. CUT CONDUIT FLUSH WITH TOP OF CONCRETE PAD.

GROUND MOUNTED CONTROLLER CABINET

SIGNAL HEAD AS INDICATED ON PLANS-PEDESTRIAN HEAD DRAWN ONLY AS REFERENCE

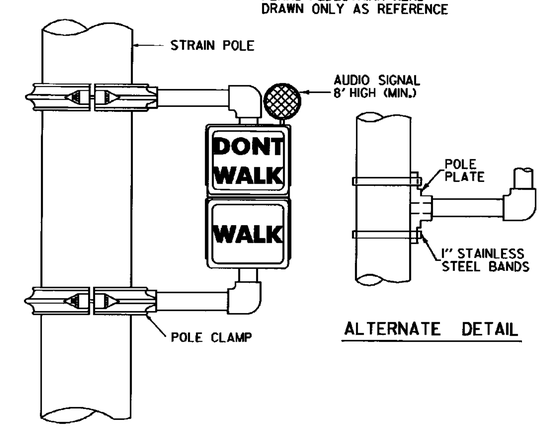

ALTERNATE DETAIL

DETAIL FOR POLE MOUNTING SIGNAL HEAD

NOTES:

1. THE CONCRETE PAD SURFACE SHALL HAVE A BRUSHED FINISH.
2. AN ASPHALT IMPREGNATED FELT PAD SHALL BE USED BETWEEN THE CONTROLLER PAD AND ADJACENT SIDEWALK, WHERE APPLICABLE.
3. THE MINIMUM CLEAR ZONE IN LOW SPEED URBAN AREAS IS 2' BEYOND THE FACE OF CURB. IN OTHER CASES, THE MINIMUM IS EQUAL TO THE CLEAR ZONE AS DEFINED IN AASHTO'S ROADSIDE DESIGN GUIDE.
4. THE CONRETE AND SUBBASE OF CRUSHED GRAVEL SHALL BE SUBSIDIARY TO THE TRAFFIC SIGNAL ITEM.
5. FOR GROUND MOUNTED CABINET INSTALLATIONS:
   A. THE METER SHOULD BE INSTALLED AS SHOWN ON THE PLANS. THE PREFERRED METER LOCATION IS ON A SEPARATE POLE OR STANCHION. HOWEVER, IF LIMITING CONDITIONS EXIST, THE METER MAY BE INSTALLED ON THE CONTROLLER CABINET ON THE SIDE AWAY FROM APPROACHING TRAFFIC.
   B. THE NUMBER 5 BARS SHALL BE SPACED 16" CENTER TO CENTER WITH A MINIMUM OF 3" COVER TO THE GROUND. THEY SHALL RUN BOTH NORMAL AND TRANSVERSE IN THE CONCRETE PAD.
   C. ANCHOR BOLT DIMENSIONS SHALL BE SUPPLIED BY THE CABINET MANUFACTURER. THESE BOLTS SHALL BE GALVANIZED OR STAINLESS STEEL.
   D. THE ALUMINUM SPACER MAY BE DELETED IN URBAN AREAS, IF SO NOTED ON THE PLANS.

OTHER STDS. REQUIRED E - 171A, E - 175

REVISIONS AND CORRECTIONS

JUNE 21, 1989 - DATE OF ORIGINAL ISSUE
MAY 14, 1990 - FHWA COMMENTS
NOV. 17, 1993 - FHWA COMMENTS, NOTE REVISIONS, MOVED CANTILEVER DETAILS TO NEW E-171C AND ADDED TETHER WIRE DETAIL
AUG. 9, 1995 - SPECIFIED MATERIAL UNDER PAD, REVISED NOTES AND MINOR CORRECTIONS

APPROVED FOR THIS PROJECT AND/OR DESIGN IMPLEMENTATION. FHWA FINAL APPROVAL PENDING.

APPROVED

Gordon D. MacArthur
DIRECTOR OF ENGINEERING

David A. Ross
TRAFFIC AND SAFETY ENGINEER

TRAFFIC CONTROL SIGNALS MISC. DETAILS

/traf/std/std171b.dgn - std171b.1

VERMONT AGENCY OF TRANSPORTATION

STANDARD E-171B

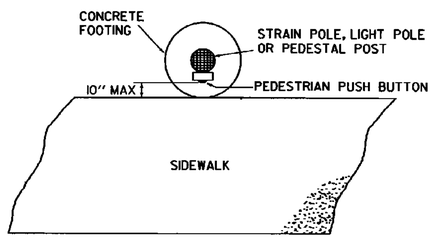

IF THE PEDESTRIAN PUSH BUTTON IS NOT LOCATED WITHIN 10' OF THE SIDEWALK, AN EXTENSION TO THE SIDEWALK MUST BE PROVIDED AS SHOWN BELOW. BUTTONS LOCATED ON THE SIDE OF CONTROLLER CABINETS MAY REQUIRE EXTENSION OF THE CONCRETE PAD, SHOWN ON STD E-171B, TO MEET THIS REQUIREMENT.

WHEN SIDEWALK EXTENSIONS ARE PROVIDED, A SUBBASE OF FINE GRADED CRUSHED GRAVEL SHALL BE PLACED AND ASPHALT IMPREGNATED FELT SHALL BE USED BETWEEN THE EXTENSION AND THE SIDEWALK AS SHOWN ON STD E-171B.

SIDEWALK EXTENSION
PARALLEL APPROACH

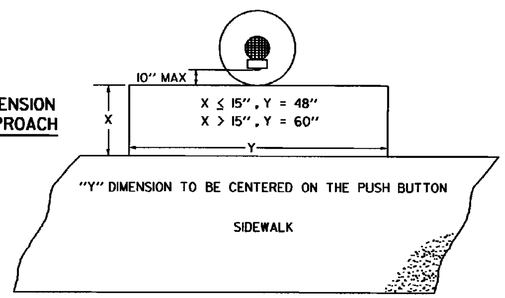

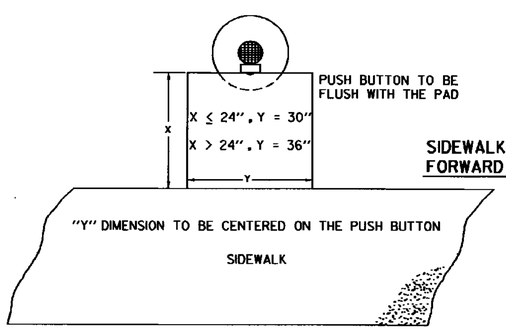

SIDEWALK EXTENSION
FORWARD APPROACH

PEDESTRIAN PUSH BUTTON ACCESSIBILITY DETAIL

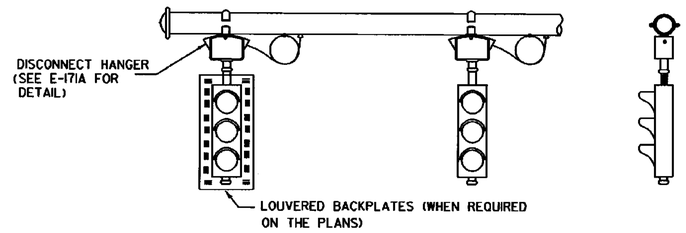

FRONT VIEW

SIDE VIEW

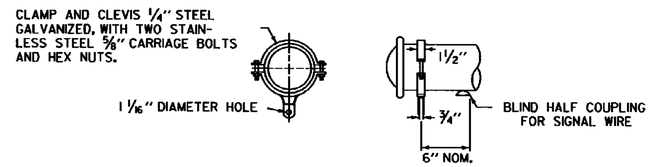

MAST ARM MOUNTING DETAILS FOR FREE SWINGING TRAFFIC SIGNALS

CANTILEVER MOUNTED TRAFFIC SIGNALS (AND LUMINAIRES)

MINIMUM SIGNAL CLEARANCE SHALL BE:
16.5' FOR FREE SWINGING HEADS, OR
17' FOR FIXED MOUNTED HEADS

SEE THE CANTILEVER / FOOTING DETAIL SHEET(S) FOR ADDITIONAL INFORMATION.

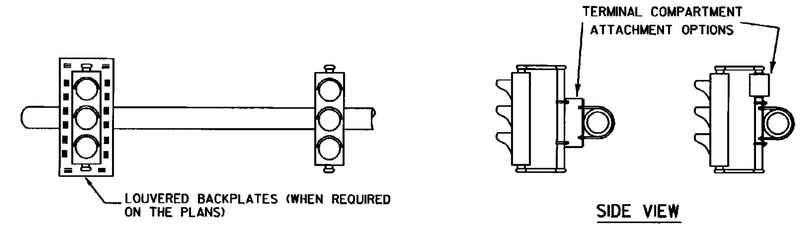

FRONT VIEW

SIDE VIEW

SIGNAL MOUNTING PLATE SCHEDULE			
ARM DIAMETER	A	B	C
3 1/10" - 5 2/10"	8 3/4"	5 3/8"	1 11/16"
5 2/10" - 7 9/10"	10 3/4"	7 5/8"	1 9/16"
7 9/10" - 11 3/10"	14"	10 7/8"	1 9/16"

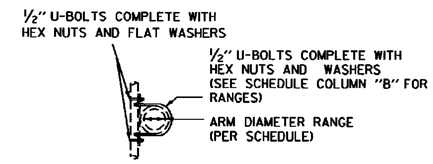

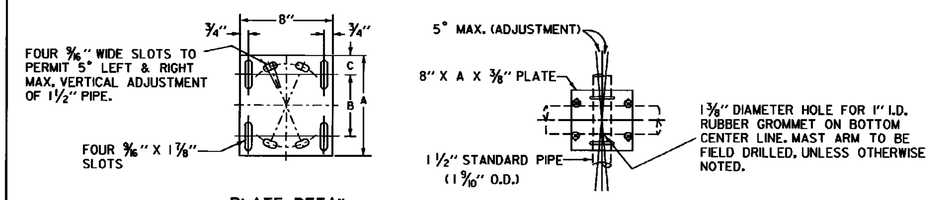

PLATE DETAIL

1. ALTERNATE METHODS FOR RIGID MOUNTING OF SIGNALS TO MAST ARMS MAY BE USED. SHOP DRAWINGS FOR THE ALTERNATE METHOD HARDWARE SHALL BE SUBMITTED TO THE TRAFFIC DESIGN SECTION VIA THE RESIDENT ENGINEER FOR APPROVAL PRIOR TO CONSTRUCTION.
2. ALL RIGIDLY MOUNTED TRAFFIC AND PEDESTRIAN SIGNALS SHALL BE PROVIDED WITH REINFORCEMENT PLATES AT THE ATTACHMENT POINTS.
3. ALL NUTS, BOLTS AND WASHERS SHALL BE STAINLESS STEEL.
4. ALL OTHER MOUNTING BRACKET MATERIALS SHALL BE GALVANIZED STEEL.

MAST ARM MOUNTING DETAILS FOR FIXED MOUNT TRAFFIC SIGNALS (PREFERRED METHOD)

OTHER STDS. REQUIRED E - 170, E - 171A, E - 171B

REVISIONS AND CORRECTIONS

NOV. 17, 1993 - DATE OF ORIGINAL ISSUE

AUG. 9, 1995 - ADDED PED. PUSH BUTTON ACCESSIBILITY DETAIL, REMOVED GENERAL CANTILEVER DETAIL, MINOR CORRECTIONS

APPROVED FOR THIS PROJECT AND/OR DESIGN IMPLEMENTATION. FHWA FINAL APPROVAL PENDING.

APPROVED

DIRECTOR OF ENGINEERING

TRAFFIC AND SAFETY ENGINEER

TRAFFIC CONTROL SIGNALS
CANTILEVER MOUNTING DETAILS
PED. PUSH BUTTON ACCESSIBILITY DETAIL

/traf/std/std171c.dgn - std171c.1

VERMONT AGENCY OF TRANSPORTATION

STANDARD
E-171C

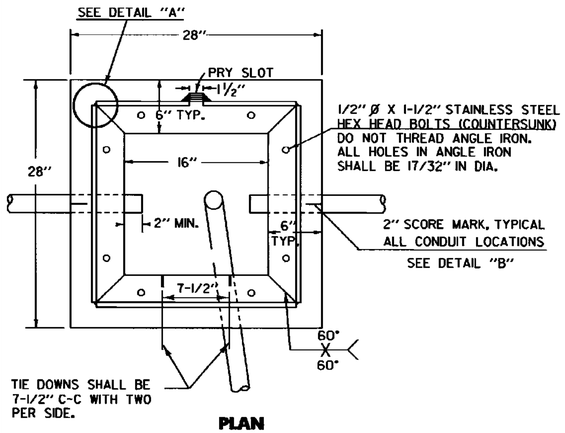

PLAN

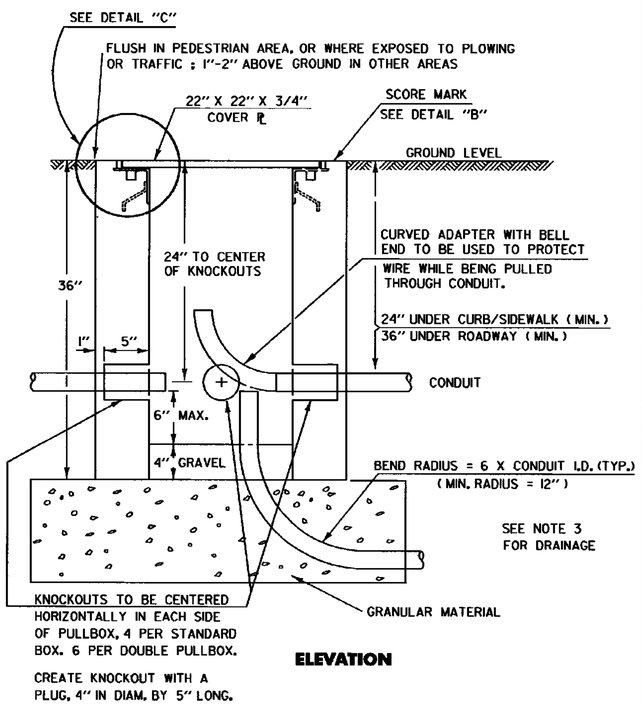

ELEVATION

CONCRETE PULLBOX STANDARD

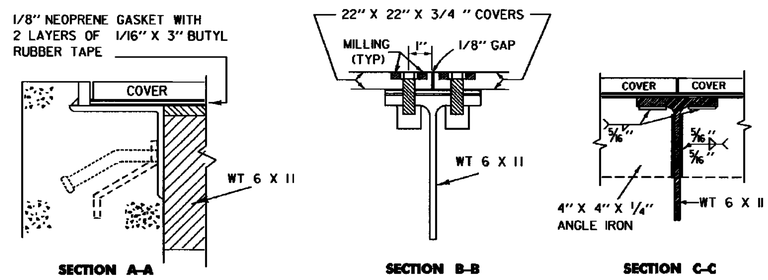

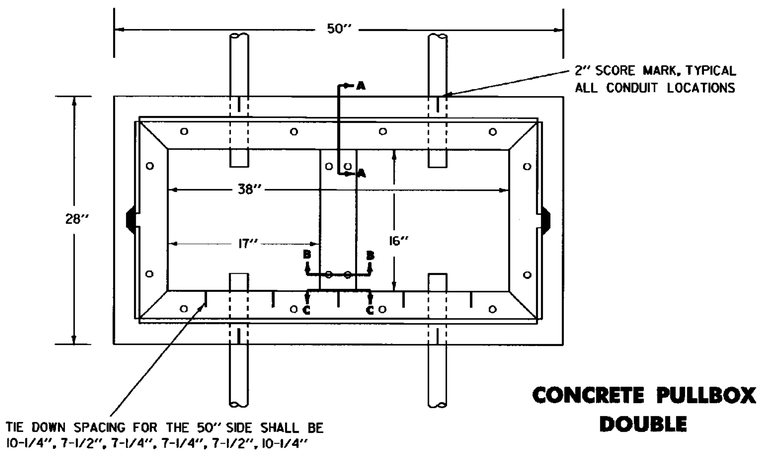

CONCRETE PULLBOX DOUBLE

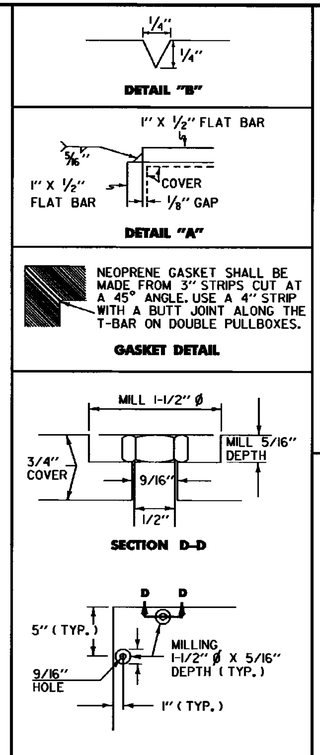

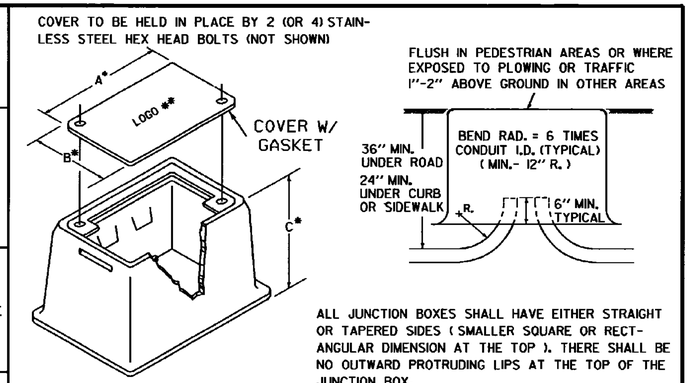

* DIMENSIONS A THRU C AS SHOWN ON THE PLANS. (MINIMUM 18" X 12" X 12" OR AS REQUIRED BY THE NATIONAL ELECTRICAL CODE)

ALL JUNCTION BOXES SHALL HAVE EITHER STRAIGHT OR TAPERED SIDES (SMALLER SQUARE OR RECTANGULAR DIMENSION AT THE TOP). THERE SHALL BE NO OUTWARD PROTRUDING LIPS AT THE TOP OF THE JUNCTION BOX.

JUNCTION BOX

(SHAPE MAY VARY SLIGHTLY WITH MANUFACTURER)

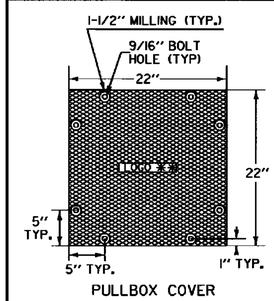

PULLBOX COVER

LOGO APPLICATION BY MANUFACTURER WITH TEXT AS SHOWN ON PLANS.

** ALTERNATE LOGOS
SIGNAL
ELECTRIC
LIGHTING

ALL PULLBOX COVERS SHALL BE SKID RESISTANT. ALL COVERS SHALL HAVE THE LOGO PUNCHED OR STAMPED INTO A FLAT RECTANGLAR AREA. MINIMUM LETTER HEIGHT IS 1/2", MINIMUM DEPTH IS 1/16". DOUBLE PULLBOXES REQUIRE ONLY ONE LOGO.

ALL HOLES IN THE COVER SHALL BE 9/16" IN DIA.

PULLBOX COVER & LOGO DETAILS

PULLBOX & JUNCTION BOX NOTES

1. ALL PULLBOXES SHALL BE CONSTRUCTED WITH CONCRETE, CLASS B.
2. CONDUIT SIZE AS SHOWN ON THE PLANS.
3. EXCAVATION FOR THE UNITS SHALL INCLUDE EXCAVATION OF AN AREA ONE FOOT OUTSIDE THE UNITS AND EXTENDING ONE FOOT BELOW THE FINISH GRADE OF THE BOTTOM OF THE UNITS. ONE FOOT OF GRANULAR MATERIAL SHALL BE PLACED IN THE EXCAVATED AREA AND PROPERLY COMPACTED PRIOR TO INSTALLATION. WHERE NECESSARY AND AT THE DISCRETION OF THE ENGINEER, A DRAINAGE PIPE (MINIMUM 3'' PERFORATED PVC) SHALL BE PROVIDED FROM THE UNIT TO THE NEAREST APPROPRIATE OUTLET. DRAINAGE WORK SHALL NOT BE PAID DIRECTLY, BUT WILL BE CONSIDERED PART OF THE PULLBOX OR JUNCTION BOX ITEM.
4. ALL EXPOSED METAL HARDWARE, INCLUDING PULLBOX COVERS, FRAMES & ANGLES, SHALL BE GALVANIZED OR STAINLESS STEEL.
5. ALL CONDUIT SHALL ENTER JUNCTION BOXES FROM THE BOTTOM, NOT THROUGH THE SIDE WALL.
6. CONDUITS SHALL NOT ENTER DOUBLE PULLBOXES, DIRECTLY UNDER THE "T" BAR.
7. THE PRY SLOT AND THE COVER GAPS SHALL BE FILLED WITH CAULKING JUST PRIOR TO PROJECT COMPLETION.
8. WHEN INSTALLED ON SLOPES, PULLBOXES AND JUNCTION BOXES SHALL BE TIPPED TO MATCH THE EXISTING SLOPE UP TO A 1 ON 4 SLOPE. ON STEEPER SLOPES, THEY SHALL BE INSTALLED AS ON A 1 ON 4 SLOPE. A SUFFICIENT AMOUNT OF THE EXCAVATED MATERIAL SHALL BE USED TO SHAPE AROUND THE LOW SIDE OF THE BOX SUCH THAT THE MAXIMUM EXPOSURE IS 2''. THE MATERIAL SHALL BE TAPERED OVER AN AREA EXTENDING ABOUT 5' FROM THE BOX. IF SUFFICIENT MATERIAL IS NOT AVAILABLE, MATERIAL MEETING THE REQUIREMENTS OF EARTH BORROW (SUBSECTION 703.02) SHALL BE USED. PAYMENT SHALL BE CONSIDERED PART OF THE PULLBOX OR JUNCTION BOX ITEM.
9. ALL COVERS SHALL BE FLUSH WITH THE BOXES AND FRAMES.
10. ALL CONDUITS ENTERING A PULLBOX OR JUNCTION BOX SHALL HAVE BUSHINGS TO PROTECT THE CABLES.

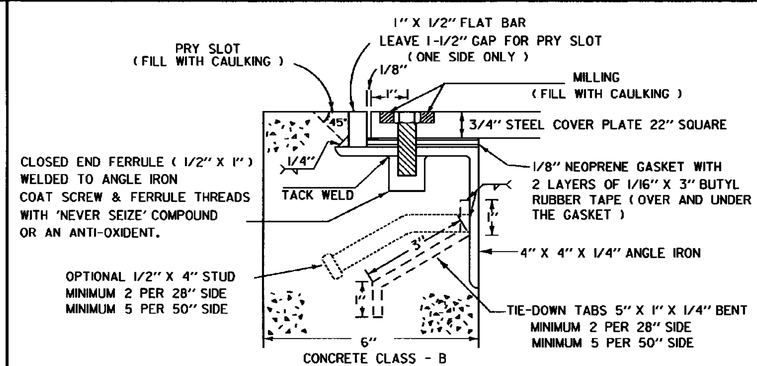

DETAIL "C"

OTHER STDS. REQUIRED NONE

REVISIONS AND CORRECTIONS

SEPT. 10, 1987 - DATE OF ORIGINAL ISSUE
APRIL 1, 1989 - REVISED COVER DIMENSIONS
MAY 26, 1989 - FHWA COMMENTS
NOV. 17, 1993 - MAJOR REVISIONS, STANDARDIZATION OF PULLBOX COVERS
AUG. 9, 1995 - REVISED NOTE 8, CHANGED LOGO OPTIONS

APPROVED FOR THIS PROJECT AND/OR DESIGN IMPLEMENTATION. FHWA FINAL APPROVAL PENDING.

APPROVED

Gordon B. MacArthur
DIRECTOR OF ENGINEERING

David A. Ross
TRAFFIC AND SAFETY ENGINEER

PULLBOXES AND JUNCTION BOXES

/traf/std/stdel73.dgn - stdel73.1

VERMONT AGENCY OF TRANSPORTATION

STANDARD

E-173

Bikeway Details

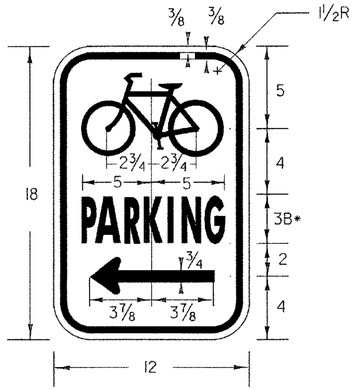

* REDUCE LETTER SPACING 50%

D4-3

COLORS: BACKGROUND - WHITE (REFL)
TEXT, BORDER AND SYMBOLS - GREEN (REFL)

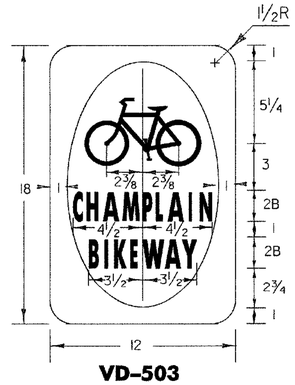

VD-503

COLORS:
LEGEND AND SYMBOL - WHITE (REFL)
INNER BACKGROUND - GREEN (REFL)
OUTER BACKGROUND - WHITE (REFL)

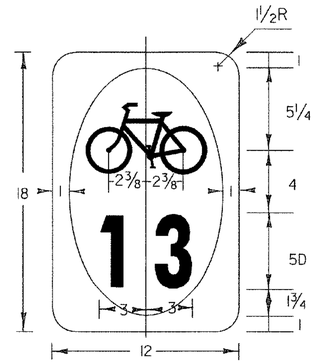

M1-8

COLORS:
LEGEND AND SYMBOL - WHITE (REFL)
INNER BACKGROUND - GREEN (REFL)
OUTER BACKGROUND - WHITE (REFL)

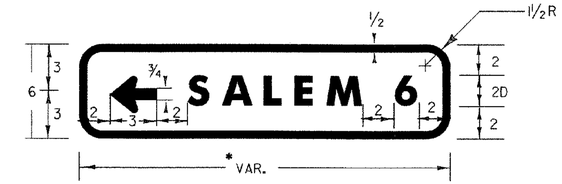

D1-1B (L)

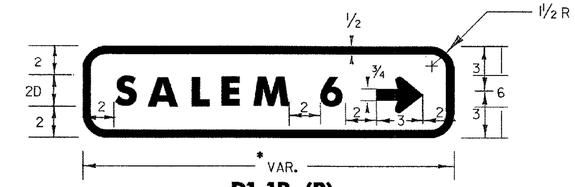

D1-1B (R)

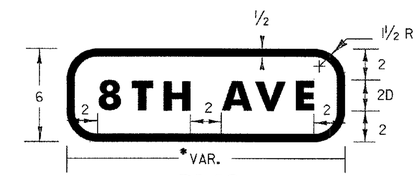

D1-1C

* 24 INCH MAX.

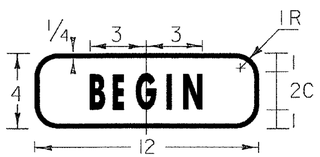

M4-11

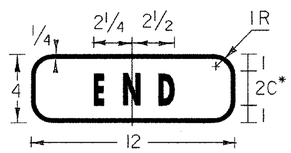

* INCREASE LETTER SPACING 100%

M4-12

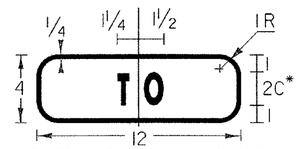

* INCREASE LETTER SPACING 100%

M4-13

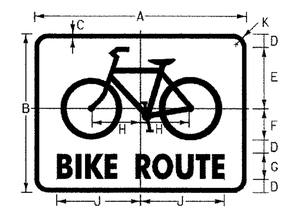

D11-1

SIGN	DIMENSIONS (INCHES)									
	A	B	C	D	E	F	G	H	J	K
MIN& STD	24	18	1/2	1 1/2	7	3 1/2	3C	5 1/2	9 1/2	1 1/2

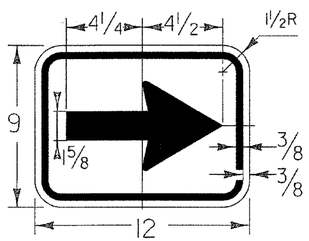

M7-1

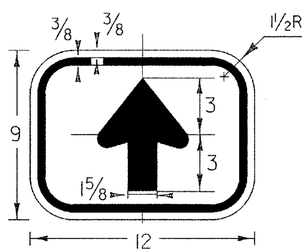

M7-2

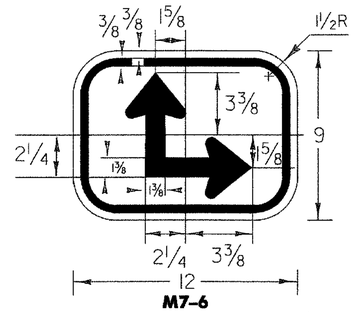

M7-6

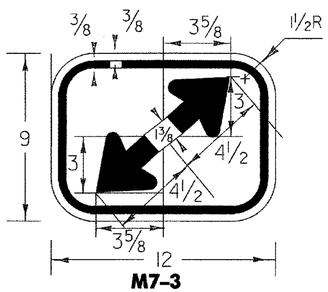

M7-3

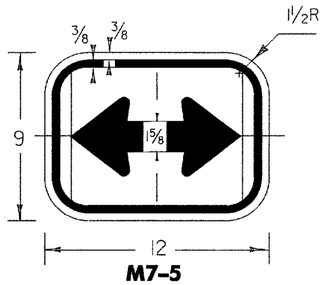

M7-5

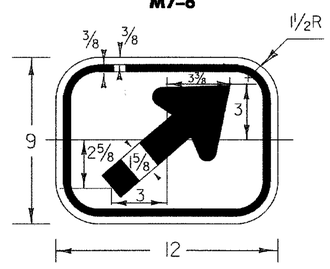

M7-4

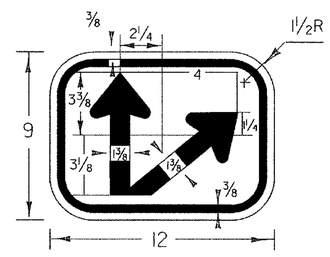

M7-7

GENERAL

SEE STANDARD E-144 FOR ARROWHEAD DETAILS. SEE FHWA STANDARD HIGHWAY SIGN BOOK FOR BIKE DETAIL.
SUPPLEMENTAL PLAQUES SHALL BE USED ONLY IN COMBINATION WITH GUIDE SIGNS. THEY SHALL NOT BE MOUNTED ALONE OR DISPLAYED ALONE. IF USED, A SUPPLEMENTAL PLAQUE SHALL BE INSTALLED ON THE SAME POST(S) AS THE GUIDE SIGN.

COLORS

THE SIGNS SHOWN ON THIS SHEET SHALL HAVE REFLECTORIZED WHITE TEXT, SYMBOLS AND BORDER ON A REFLECTORIZED GREEN BACKGROUND UNLESS OTHERWISE NOTED.
THE COLORS SHALL CONFORM WITH THE COLORS ADOPTED BY AASHTO AND APPROVED BY THE FHWA.

MATERIALS

THE SIGN BASE MATERIALS USED FOR GUIDE SIGNS SHOWN ON THIS SHEET MAY BE ANY OF THE FOLLOWING MINIMUM THICKNESSES NOTED:

	12 X 4 12 X 9 12 X 18	24 X 6 24 X 18
FLAT SHEET ALUMINUM	0.060"	0.080"
HIGH DENSITY OVERLAID PLYWOOD	1/2"	1/2"

THE REFLECTIVE MATERIAL SHALL BE ASTM TYPE III GREEN OR WHITE REFLECTIVE SHEETING APPLIED TO THE ENTIRE BACKGROUND OF THE SIGN. THE TEXT AND BORDER MAY BE LETTERING FILM OR SILK SCREENED.

SPECIFICATIONS

GUIDE SIGNS SHALL MEET THE VERMONT STANDARD SPECIFICATIONS FOR TRAFFIC SIGNS AS DESCRIBED IN THE VAOT STANDARD SPECIFICATIONS FOR CONSTRUCTION.

TEXT DESIGN

LETTERS, DIGITS, ARROWS, SPACING AND TEXT DIMENSIONS SHALL CONFORM TO THE LATEST VERSION OF FHWA'S 'STANDARD ALPHABETS FOR HIGHWAY SIGNS AND PAVEMENT MARKINGS'. DETAILS SHALL CONFORM WITH THOSE DESCRIBED IN THE PUBLICATION 'STANDARD HIGHWAY SIGNS' AS SPECIFIED IN THE MUTCD.

ALL DIMENSIONS ARE IN INCHES EXCEPT WHERE NOTED

OTHER STDS. REQUIRED: E-144

REVISIONS AND CORRECTIONS
MAY 30, 2003 - DATE OF ORIGINAL ISSUE

APPROVED

DIRECTOR OF PROGRAM DEVELOPMENT

TRAFFIC OPERATIONS ENGINEER

FEDERAL HIGHWAY ADMINISTRATION

BICYCLE GUIDE SIGN DETAILS

VERMONT AGENCY OF TRANSPORTATION

STANDARD
E-131B

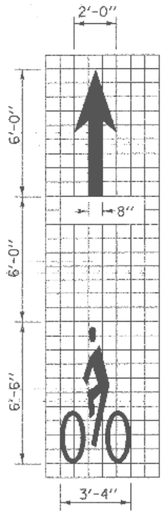

BICYCLE STENCIL PAVEMENT MARKING

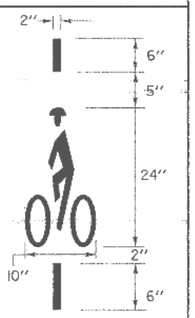

NOTE:
IF THE BICYCLE DETECTOR PAVEMENT MARKING IS USED, IT SHALL BE PLACED IN THE AREA OF HIGHEST SENSITIVITY OF VEHICLE DETECTOR LOOPS IN OUTSIDE TRAVEL LANES OR WHEN DETECTOR LOOPS ARE PLACED IN BICYCLE LANES. WHEN PAVEMENT MARKING IS USED, AN R10-22 SIGN SHALL BE INSTALLED.

BICYCLE DETECTOR PAVEMENT MARKING

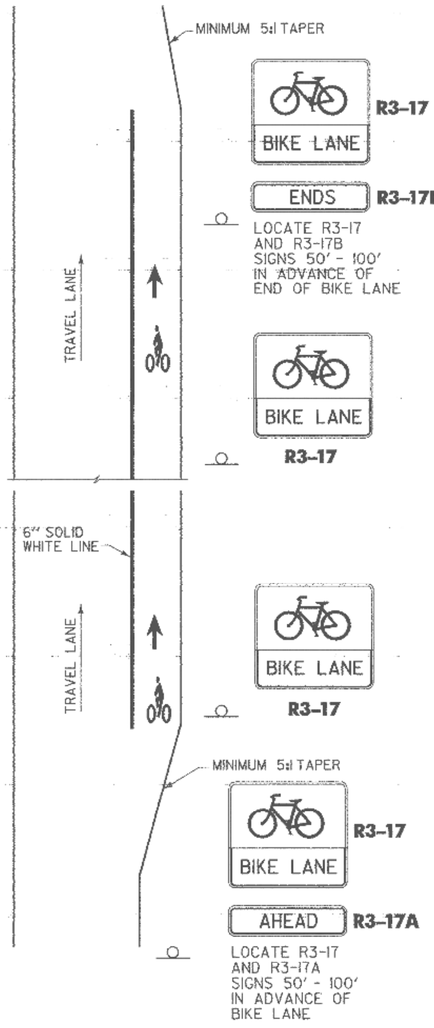

BICYCLE LANE PAVEMENT MARKINGS

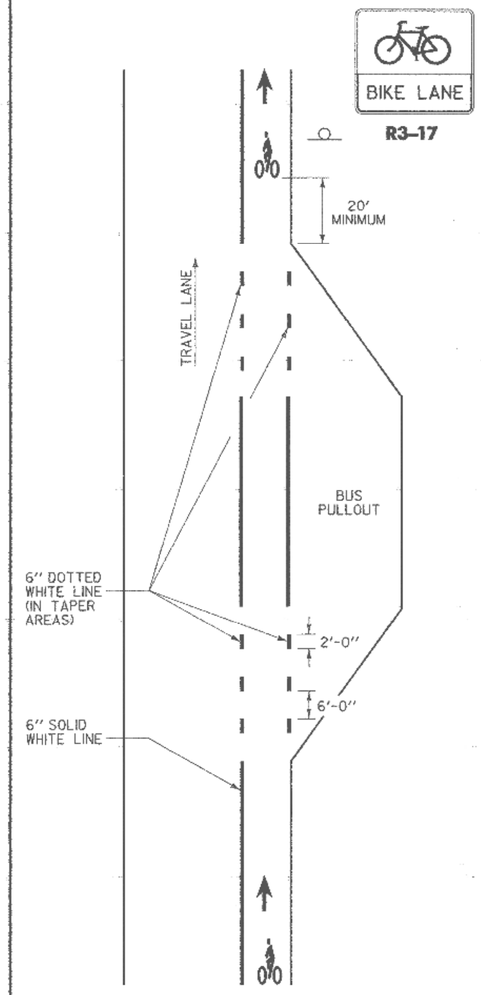

BUS PULLOUT WITH BICYCLE LANE PAVEMENT MARKINGS

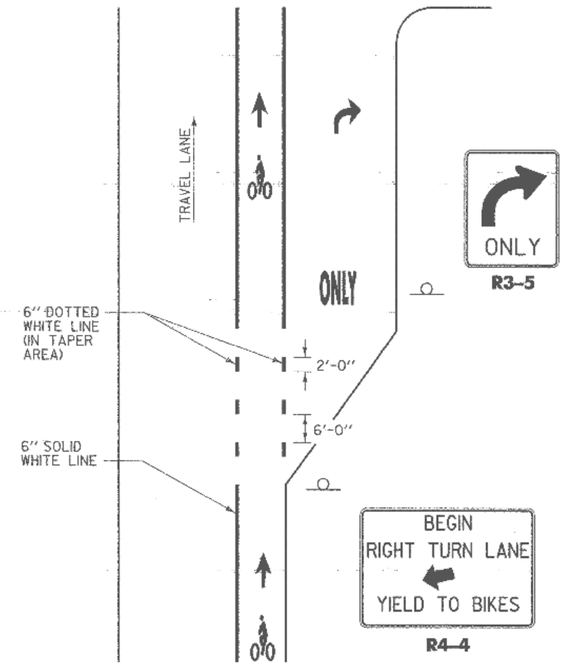

NOTE:
REFER TO VAOT STANDARD DRAWING E-192 FOR DETAILS ON PAVEMENTS MARKINGS FOR TURNING LANES.

BIKE LANE/RIGHT TURN LANE PAVEMENT MARKINGS

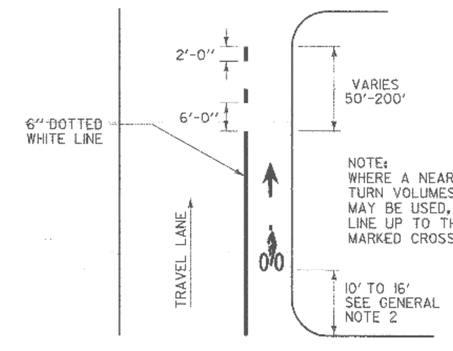

NOTE:
WHERE A NEAR SIDE BUS STOP, OR HEAVY RIGHT TURN VOLUMES ARE PRESENT, A DOTTED LINE MAY BE USED. OTHERWISE MAINTAIN A SOLID LINE UP TO THE INTERSECTION, STOP BAR OR MARKED CROSSWALK

OPTIONAL BIKE LANE PAVEMENT MARKINGS WITH BUS STOPS OR HEAVY RIGHT TURN VOLUMES

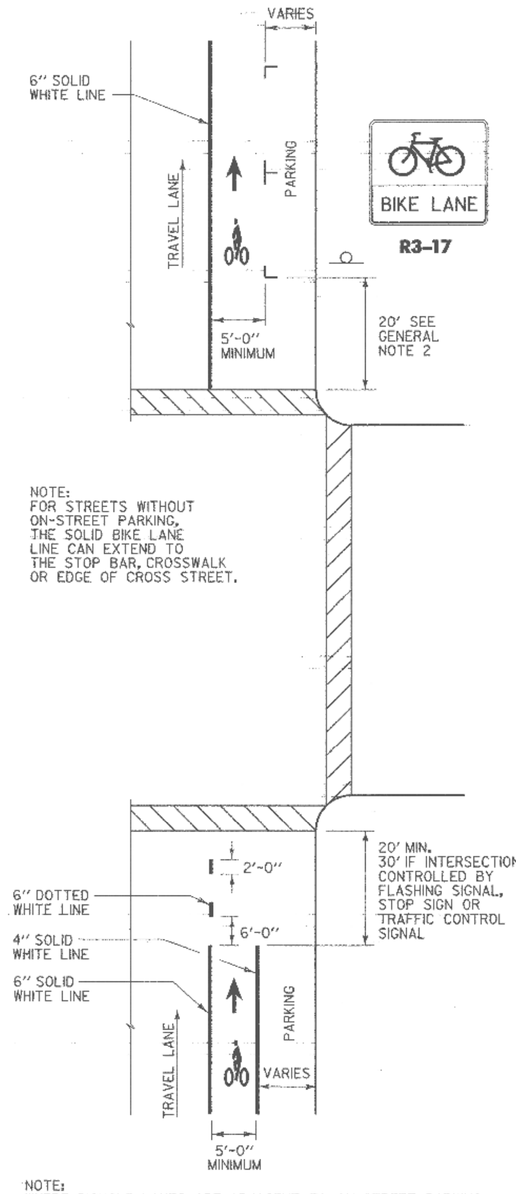

NOTE:
FOR STREETS WITHOUT ON-STREET PARKING, THE SOLID BIKE LANE LINE CAN EXTEND TO THE STOP BAR, CROSSWALK OR EDGE OF CROSS STREET.

NOTE:
WHERE BICYCLE LANES ARE ADJACENT TO ON-STREET PARKING, A BICYCLE LANE WIDTH OF AT LEAST 5'-0" IS RECOMMENDED.

BIKE LANE PAVEMENT MARKINGS AT INTERSECTION WITH ON STREET PARKING

GENERAL NOTES

1. ALL BICYCLE LANE PAVEMENT MARKINGS TO BE WHITE RETROREFLECTORIZED PAINT OR MAXIMUM 90 MIL THICK SLIP RESISTANT DURABLE MARKINGS.
2. ADJUST LOCATION OF BICYCLE LANE PAVEMENT MARKING TO AVOID PLACEMENT WHERE IT IS LIKELY TO BE TRAVERSED BY VEHICLES, SUCH AS AT DRIVEWAYS.
3. REFER TO VAOT PEDESTRIAN AND BICYCLE FACILITY PLANNING AND DESIGN MANUAL FOR GUIDANCE ON OTHER BIKE LANE CONFIGURATIONS.
4. PLACE BICYCLE STENCIL PAVEMENT MARKINGS AFTER STREET INTERSECTIONS AND AT INTERMEDIATE LOCATIONS ON LONG UNINTERRUPTED SECTIONS.

OTHER STDS. REQ'D:
E-143B, E-172, E-192

THIS SHEET IS NOT TO SCALE

REVISIONS AND CORRECTIONS

FEB. 06, 2004	DATE OF ORIGINAL ISSUE
MAR. 15, 2005	REVISED SIGNS AND ADDED BICYCLE DETECTOR PAVEMENT MARKING

APPROVED

DIRECTOR OF PROGRAM DEVELOPMENT

LOCAL TRANSPORTATION FACILITIES PROGRAM MANAGER

FEDERAL HIGHWAY ADMINISTRATION

BICYCLE PAVEMENT MARKINGS AND SIGN LAYOUT

VERMONT AGENCY OF TRANSPORTATION

STANDARD E-194

Street Ecology Details

VAOT URBAN LAWN MIX						
	LBS/AC					
WEIGHT	BROADCAST	HYDROSEED	NAME	LATIN NAME	GERM	PURITY
42.5%	34	68	CREEPING RED FESCUE	FESTUCA RUBRA X RUBRA	85%	98%
20.0%	16	32	PERENNIAL RYE GRASS	LOLIUM PERENNE	90%	95%
32.5%	26	52	KENTUCKY BLUE GRASS	POA PRATENSIS	85%	85%
5.0%	4	8	ANNUAL RYE GRASS	LOLIUM MULTIFLORUM	85%	95%
100%	80	160				

GENERAL AMENDMENT GUIDANCE		
FERTILIZER	LIME	
10/20/10	AG LIME	PELLITIZED
500 LBS/AC	2 TONS/AC	1 TONS/AC

CONSTRUCTION GUIDANCE

1. SEED MIX: THE URBAN AREA MIX SHALL NOT BE USED IN WETLANDS OR ANY WATERS OF THE STATE OF VERMONT.
2. SEED MIX: USE ONLY AS INDICATED IN THE PLANS.
3. SEED MIX: SHALL NOT HAVE A WEED CONTENT EXCEEDING 0.40% BY WEIGHT AND SHALL BE FREE OF ALL NOXIOUS SEED.
4. FERTILIZER AND LIMESTONE: SHALL FOLLOW RATES SHOWN ON PLAN OR AS DIRECTED BY THE ENGINEER
5. HAY MULCH: TO BE PLACED ON EARTH SLOPES AT THE RATE OF 2 TONS/ACRE, ACHIEVE 90% GROUND COVER OR AS DIRECTED BY THE ENGINEER.
6. HYDROSEEDING: ALTHOUGH GUIDANCE IS GIVEN ABOVE THE SITE CONDITIONS AND THE TYPE OF HYDROSEED WILL ULTIMATELY DICTATE THE AMOUNTS AND TYPES OF SOIL AMENDMENTS TO BE APPLIED
7. TURF ESTABLISHMENT: PLACING SEED, FERTILIZER, LIME AND MULCH PRIOR TO SEPTEMBER 15 AND AFTER APRIL 15 CAN BETTER ENSURE A VIGOROUS GROWTH OF GRASS.

ADAPTED FROM VTRANS TECHNICAL LANDSCAPE MANUAL FOR ROADWAYS AND TRANSPORTATION FACILITIES

TURF ESTABLISHMENT

THIS WORK SHALL BE PERFORMED IN ACCORDANCE WITH SECTION 651FOR SEED (PAY ITEM 651.15)

REVISIONS

JANUARY 22, 2015 WHF

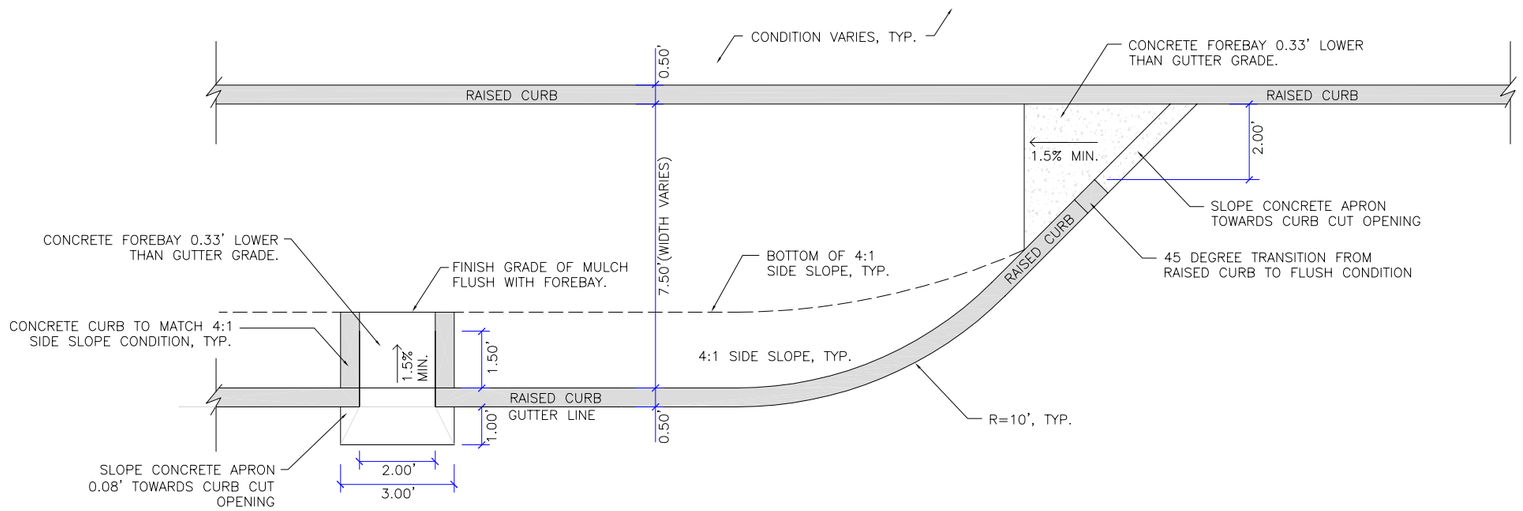

Scale: 1/4" = 1' - 0"

Stormwater Curb Extension Plan (No Capture of Landscape Strip)

SW - 01A

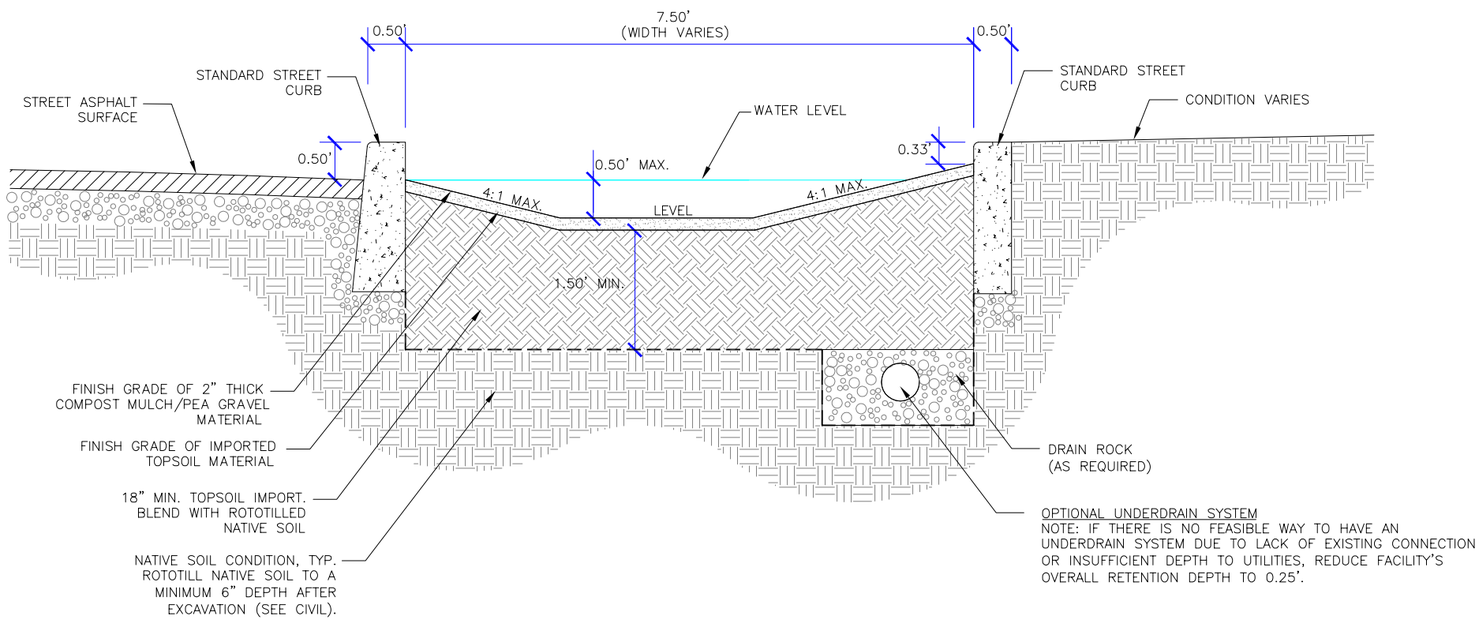

Scale: 1/2" = 1' - 0"

Stormwater Curb Extension Section (No Capture of Landscape Strip)

SW - 01B

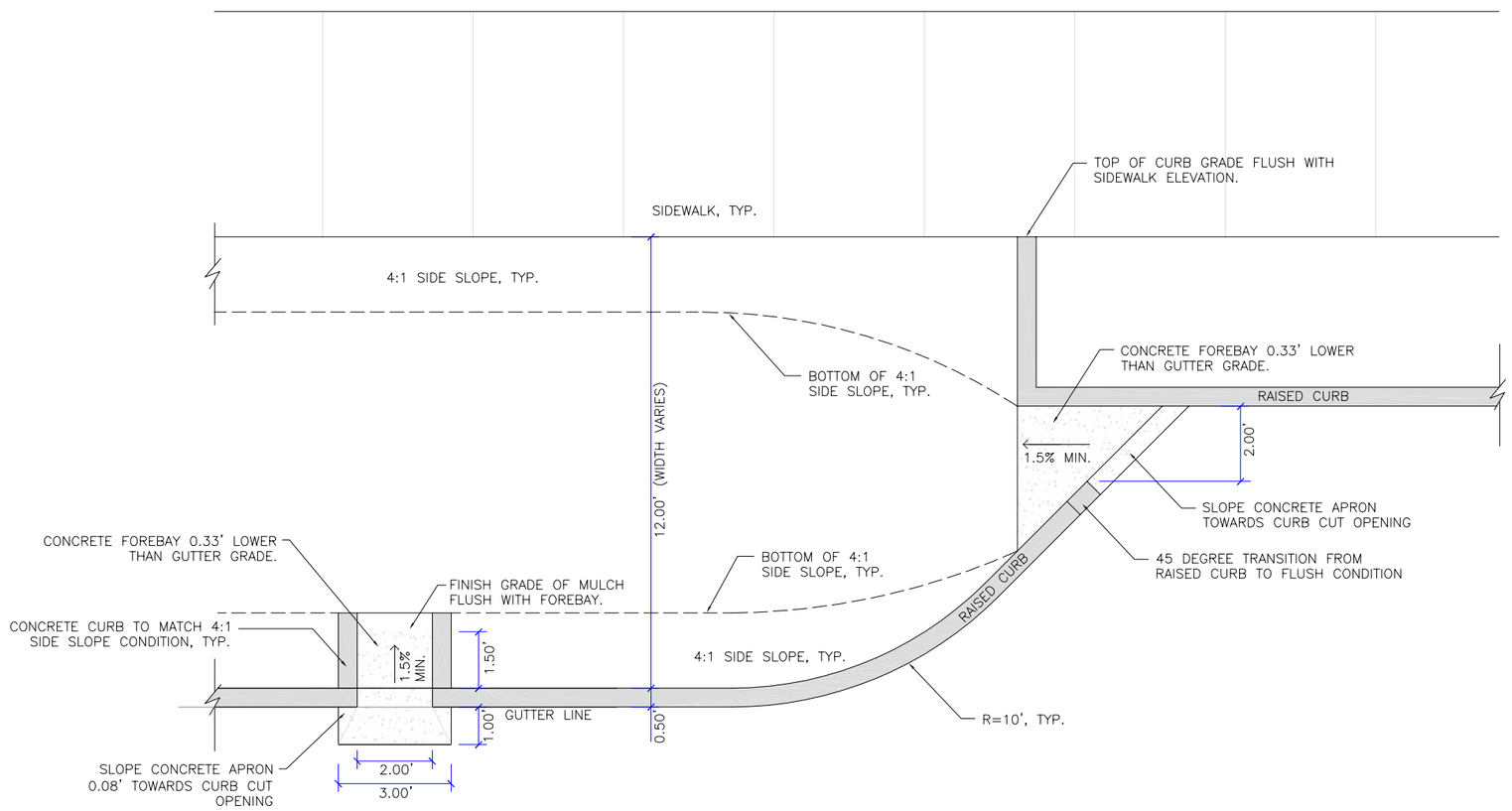

Scale: 1/4" = 1' - 0"

Stormwater Curb Extension Plan (Capturing Landscape Strip)

SW - 02A

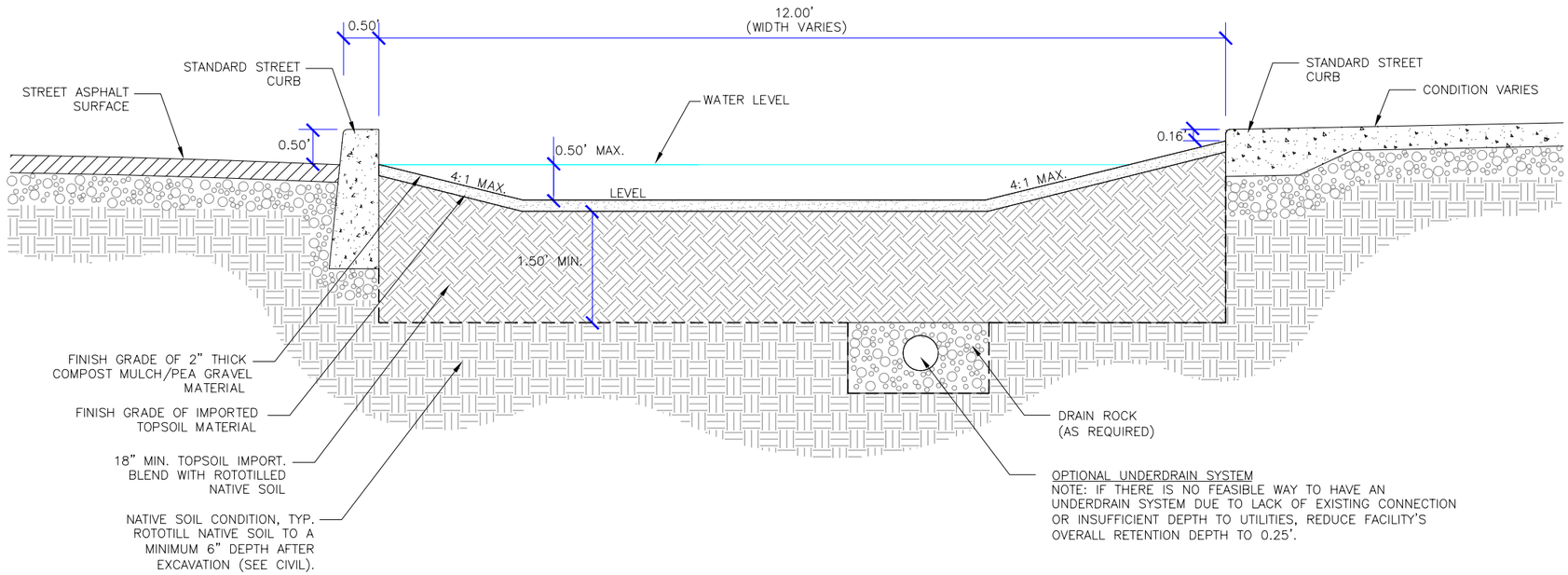

Scale: 1/2" = 1' - 0"

Stormwater Curb Extension Section (Capturing Landscape Strip)

SW - 02B

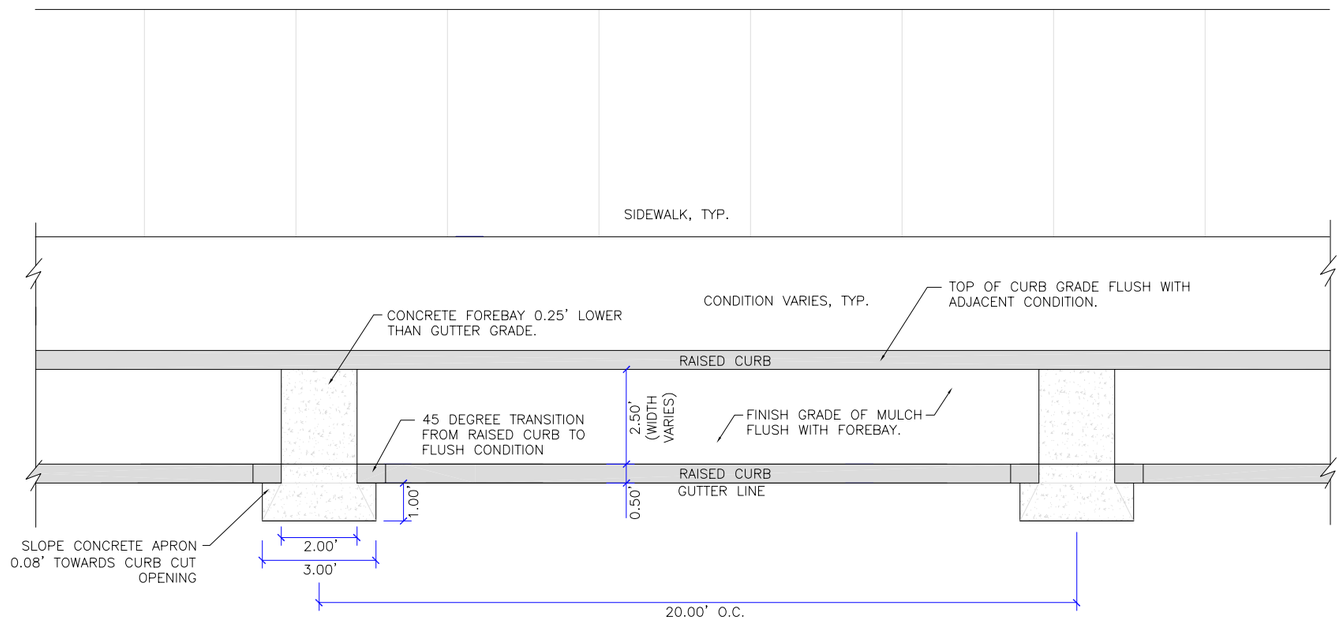

Scale: 1/4" = 1' - 0"

Green Gutter Plan (With Raised Street Curb)

SW - 03A

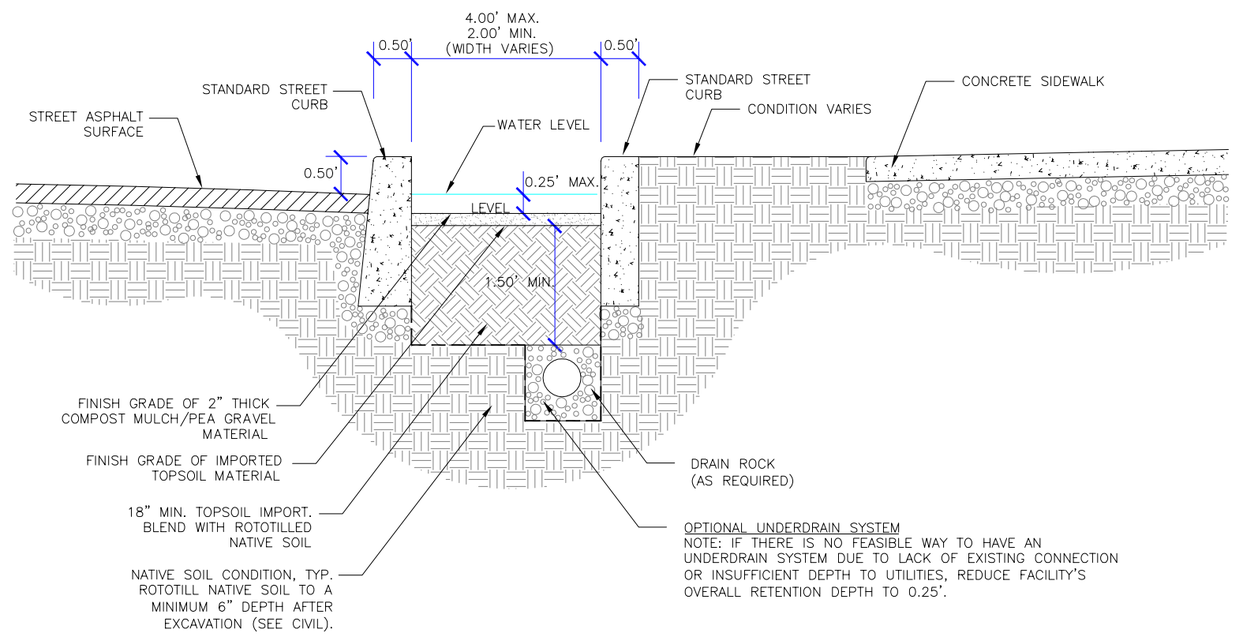

Scale: 1/2" = 1' - 0"

Green Gutter Section (With Raised Street Curb)

SW - 03B

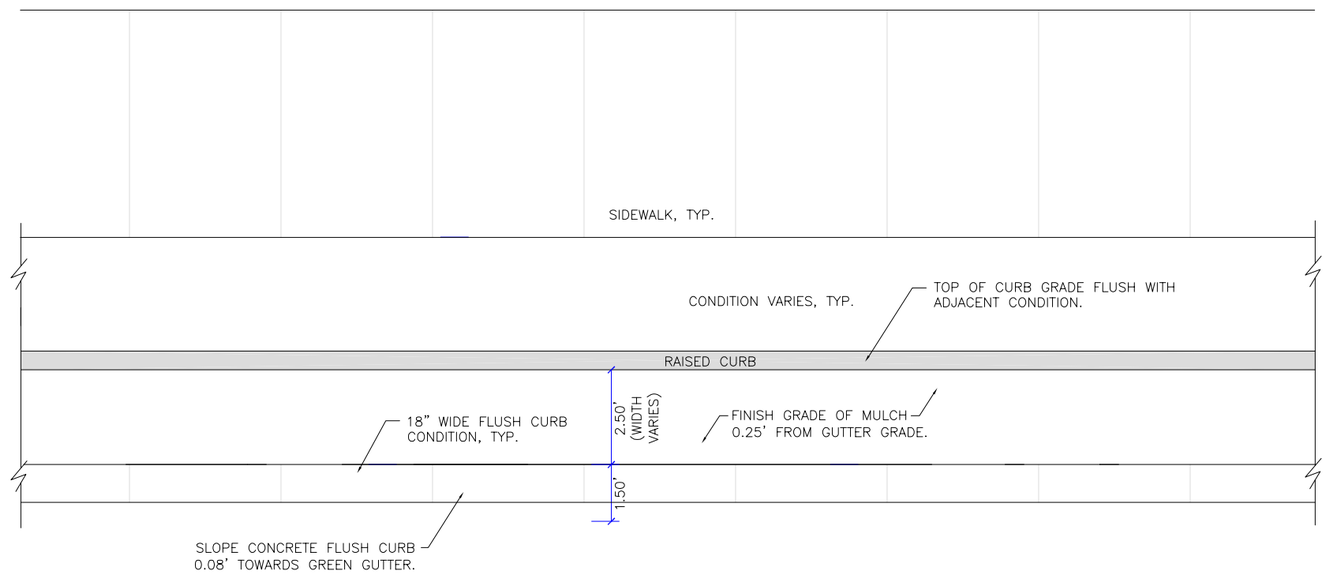

Scale: 1/4" = 1' - 0"

Green Gutter Plan (With Flush Street Curb)

SW - 04A

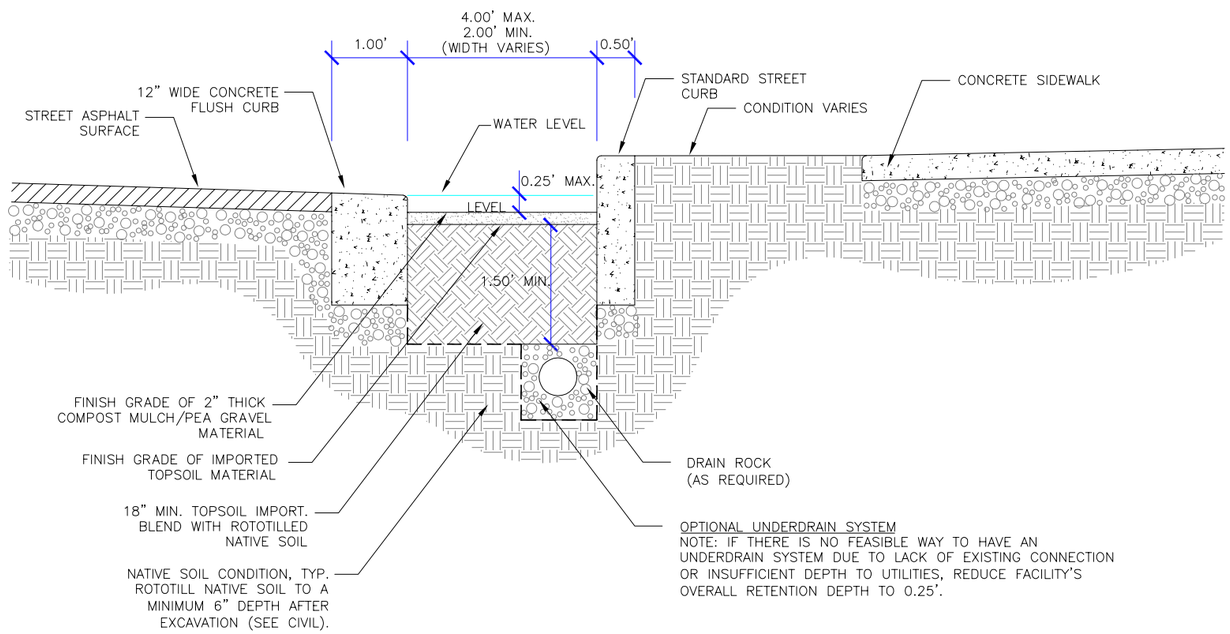

Scale: 1/2" = 1' - 0"

Green Gutter Section (With Flush Street Curb)

SW - 04B

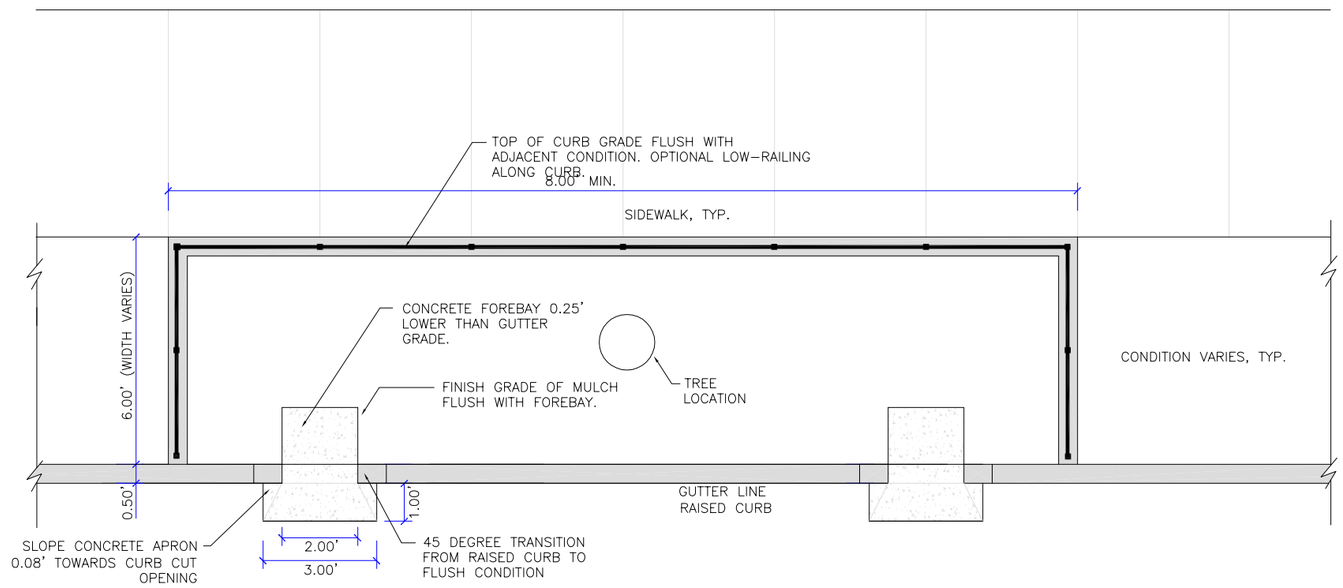

Scale: 1/4" = 1' - 0"

Street Stormwater Planter Plan (No On-Street Parking)

SW - 05A

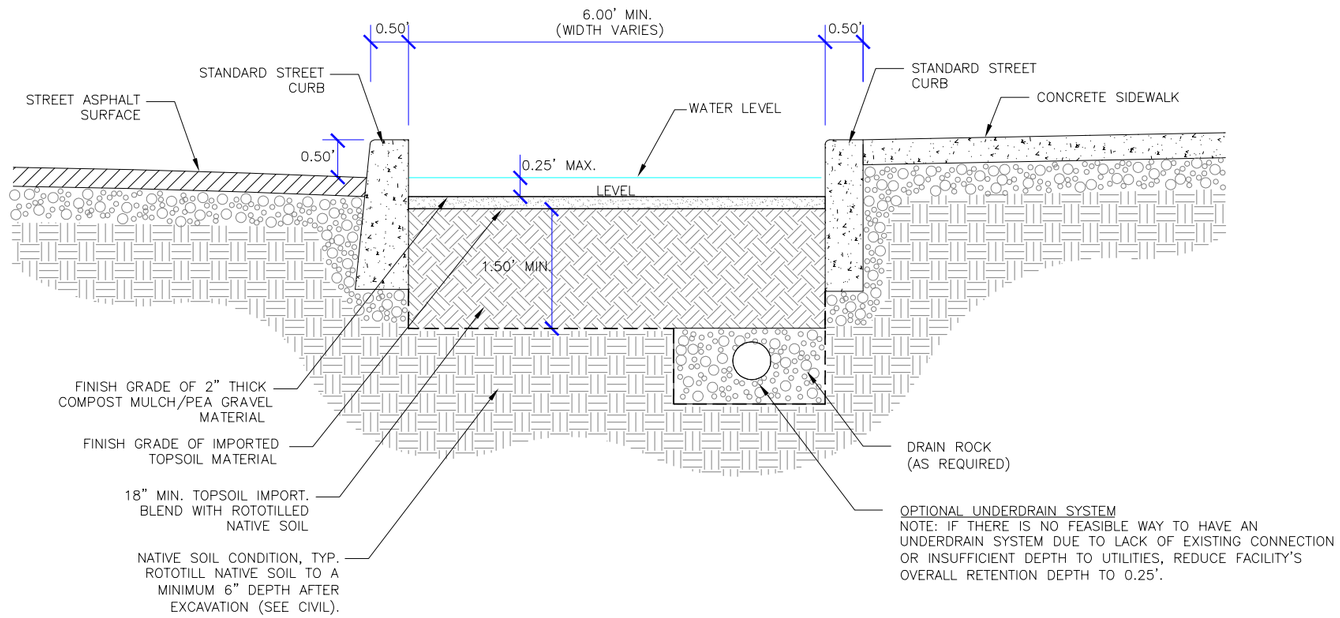

Scale: 1/2" = 1' - 0"

Street Stormwater Planter Section (No On-Street Parking)

SW - 05B

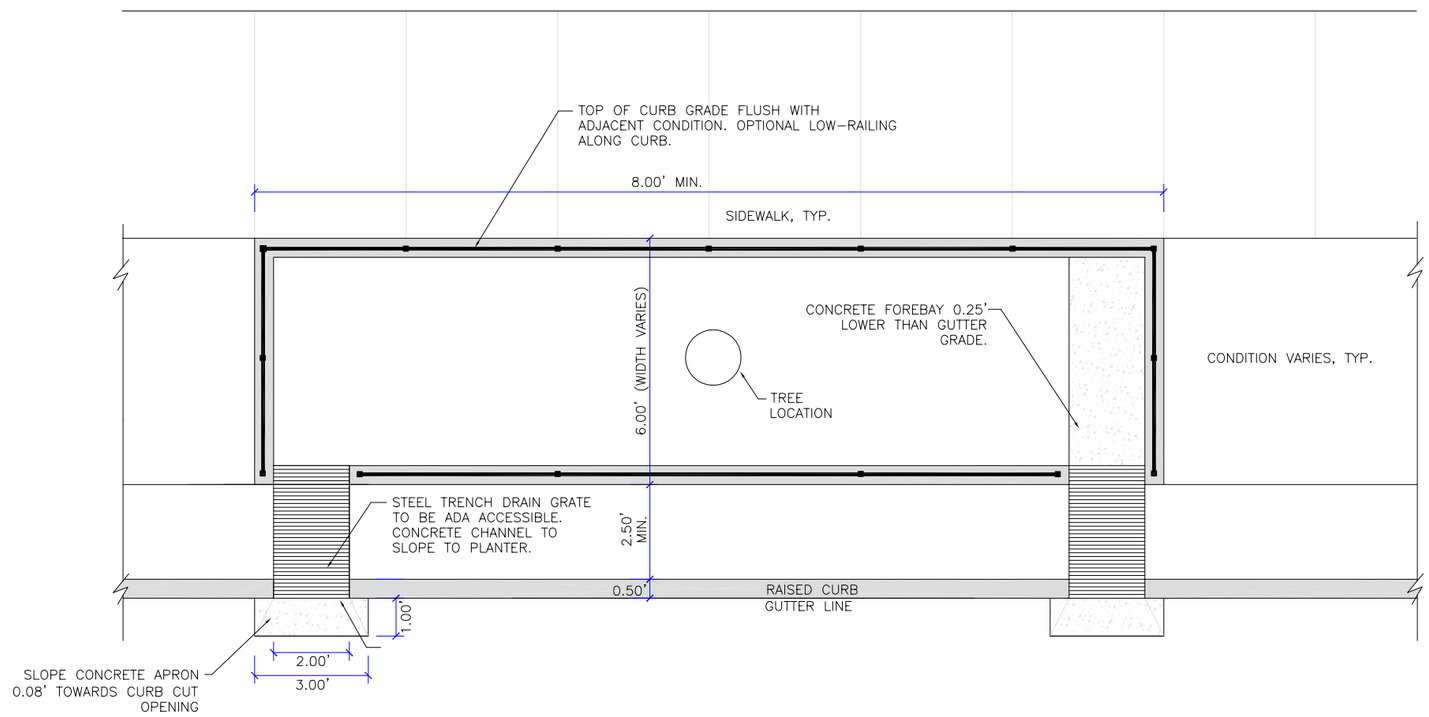

Scale: 1/4" = 1' - 0"

Street Stormwater Planter Plan (With On-Street Parking)

SW - 06A

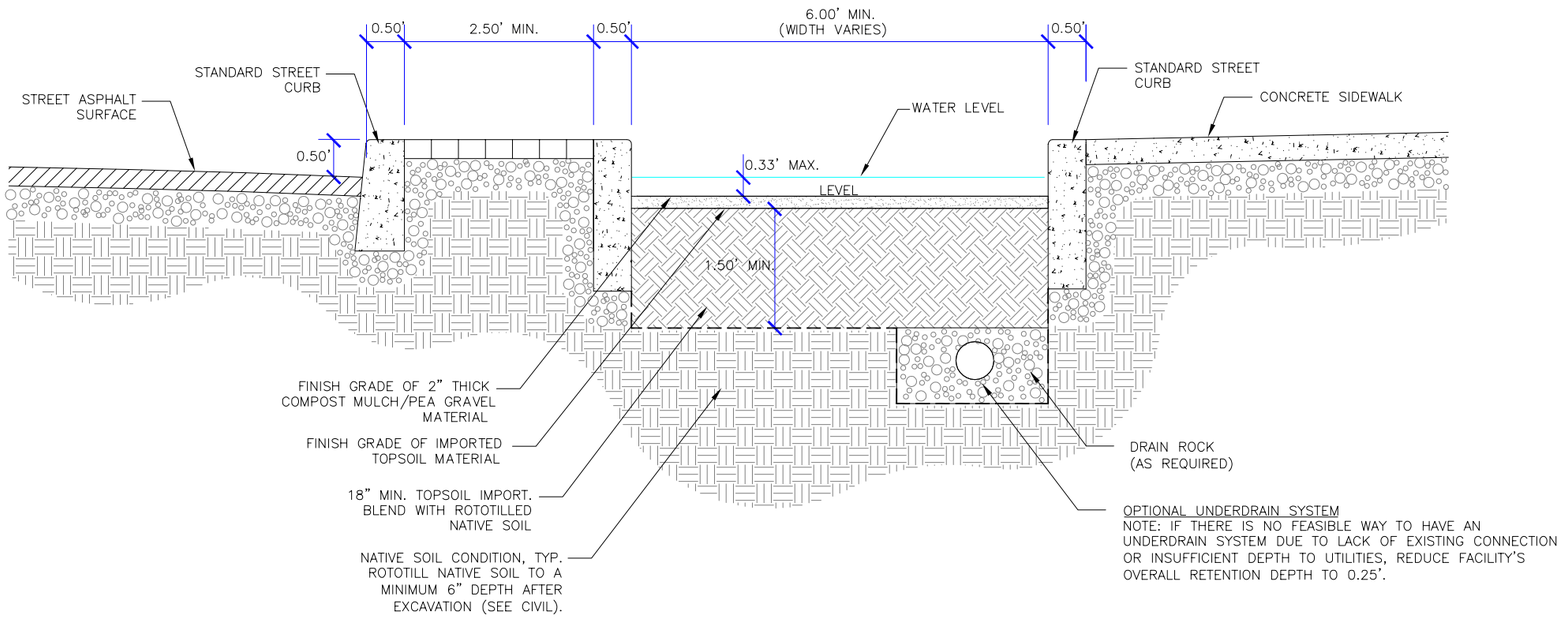

Scale: 1/2" = 1' - 0"

Street Stormwater Planter Section (With On-Street Parking)

SW - 06B

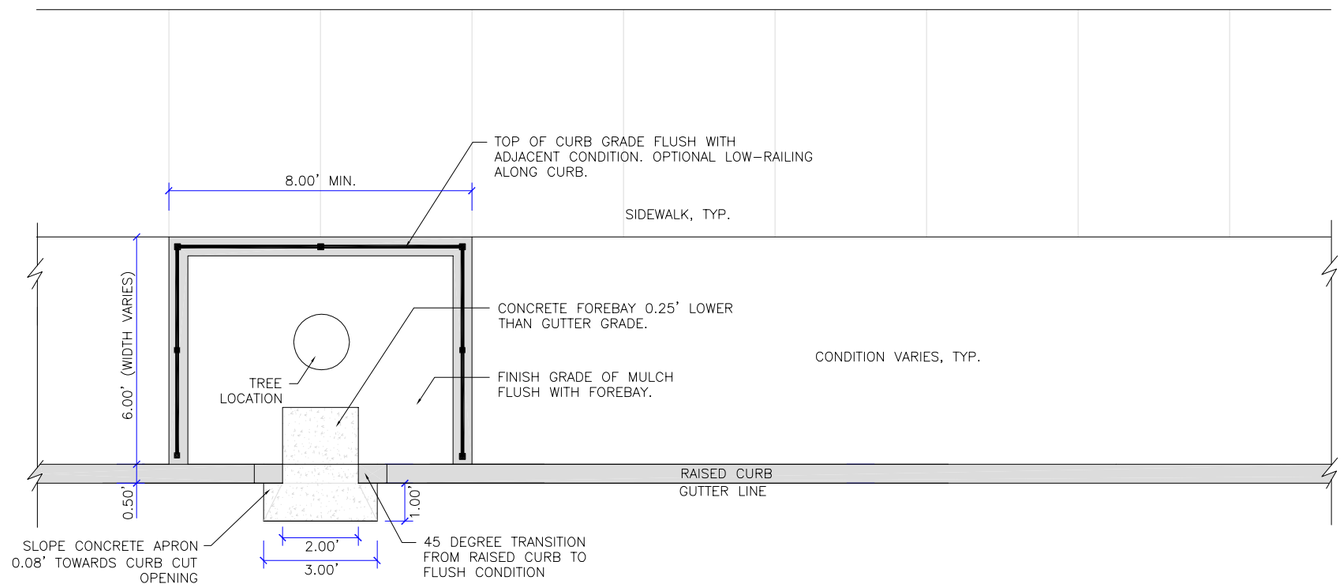

Scale: 1/4" = 1' - 0"

Tree Pit Planter Plan

SW - 07A

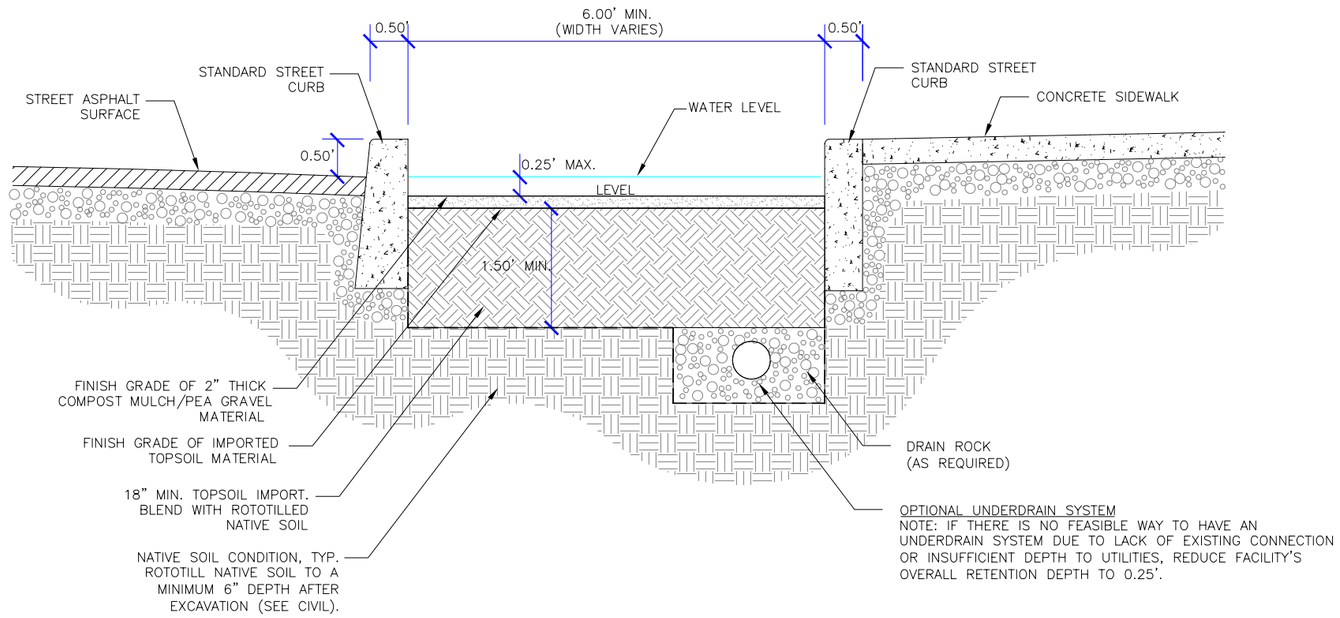

Scale: 1/2" = 1' - 0"

Tree Pit Planter Section

SW - 07B

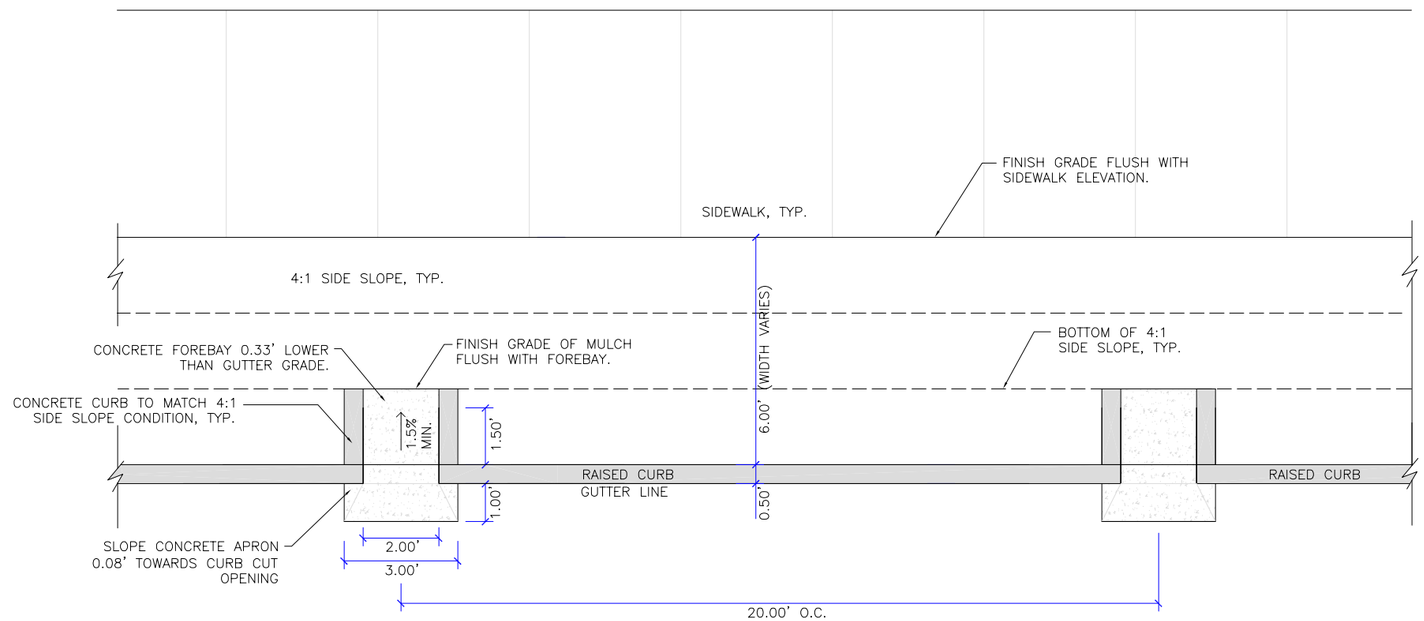

Scale: 1/4" = 1' - 0"

Vegetated Swale Plan

SW - 08A

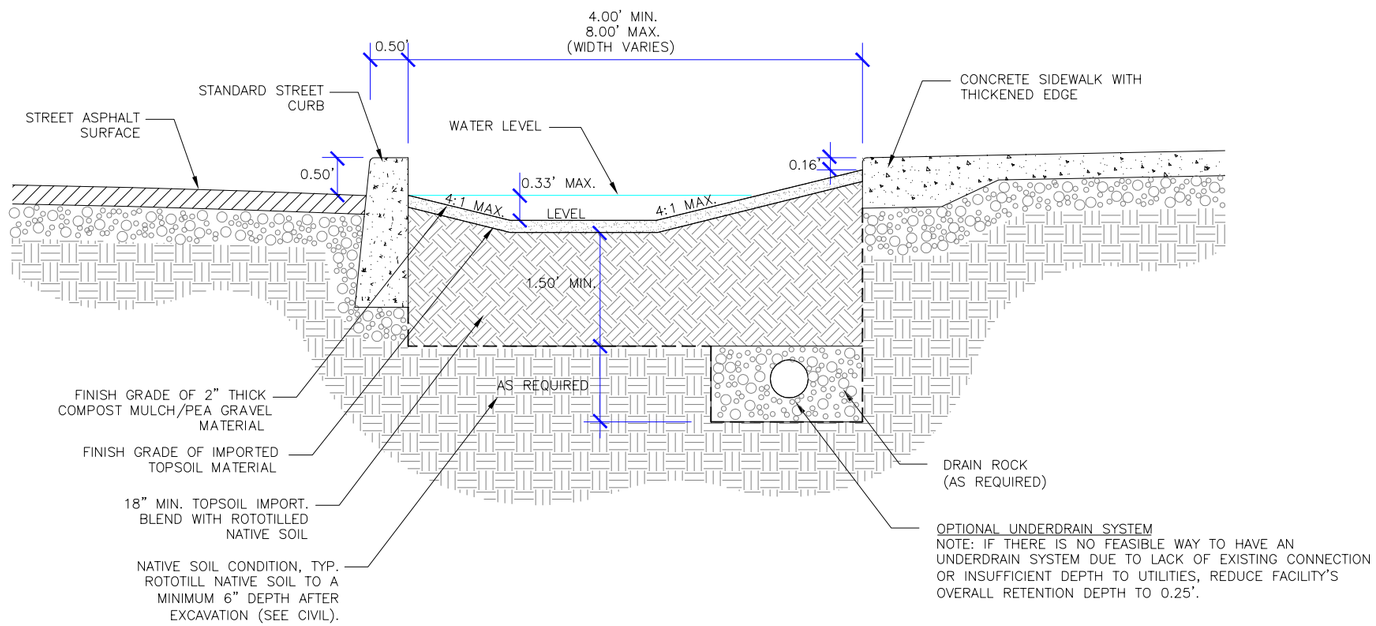

Scale: 1/2" = 1' - 0"

Vegetated Swale Section

SW - 08B

Lighting Details

SLA8D – Contemporary Arms

TYPE

1. ARM	2. COLOR

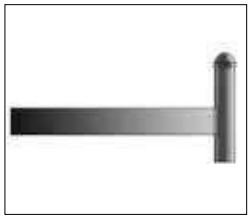

SLA8D

1. ARM

SLA8D *(Bolts to pole. Weight: 5 lbs. EPA: .40)*

2. COLOR

WH	*Arctic White*	MDB	*Bronze Metallic*
BL	*Black*	VBU	*Verde Blue*
BLT	*Matte Black*	CRT	*Corten*
DB	*Dark Bronze*	MAL	*Matte Aluminum*
DGN	*Dark Green*	MG	*Medium Grey*
TT	*Titanium*	AGN	*Antique Green*
WDB	*Weathered Bronze*	LG	*Light Grey*
		RAL	*Premium Color*
		CUSTOM * *	*Contact Factory*

DIMENSIONS

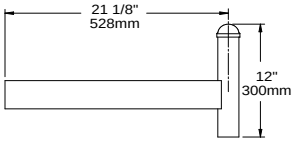

SLA8D *(4" or 5" pole)*

SPECIFICATIONS

The arms shall be of one piece unitized aluminum construction, fully welded and assembled. The slip fitter shall be cast aluminum with an internal wireway and pole stop. The arm shall be prewired with a quick connector for easy installation.

The arms shall have a cast aluminum fitter welded to the top of the arm(s) for attaching the fixture. The fixture shall be mounted with three stainless steel bolts through the top of the arm fitter into the fixture. The attachment point shall have a silicone pad for sealing the fixture to arm connection.

JOB _____

TYPE _____

NOTES _____

ARCHITECTURAL AREA LIGHTING
16555 East Gale Ave. | City of Industry | CA 91745
P 626.968.5666 | F 626.369.2695 | www.aal.net
Copyright © 2012 | REV 6.12

SLA8U – Contemporary Arms

TYPE

1. ARM	2. COLOR

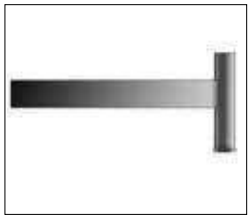

SLA8U

1. ARM

SLA8U *(Bolts to pole. Weight: 5 lbs. EPA: .40)*

2. COLOR

WH	*Arctic White*	MDB	*Bronze Metallic*
BL	*Black*	VBU	*Verde Blue*
BLT	*Matte Black*	CRT	*Corten*
DB	*Dark Bronze*	MAL	*Matte Aluminum*
DGN	*Dark Green*	MG	*Medium Grey*
TT	*Titanium*	AGN	*Antique Green*
WDB	*Weathered Bronze*	LG	*Light Grey*
		RAL	*Premium Color*
		CUSTOM * *	*Contact Factory*

DIMENSIONS

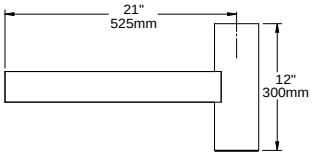

SLA8U *(4" or 5" pole)*

SPECIFICATIONS

The arms shall be of one piece unitized aluminum construction, fully welded and assembled. The arm shall be prewired with a quick connector for easy installation.

The arm shall bolt to a 4"/100mm diameter pole.

JOB _____

TYPE _____

NOTES _____

ARCHITECTURAL AREA LIGHTING
16555 East Gale Ave. | City of Industry | CA 91745
P 626.968.5666 | F 626.369.2695 | www.aal.net
Copyright © 2012 | REV 6.12

SLA20C/SLA20C-2 – Contemporary Arms

TYPE

1. ARM	2. COLOR

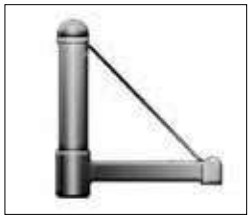

SLA20C

1. ARM

SLA20C *(Slips over 4" pole. Weight: 15 lbs. EPA: 1.39)*
SLA20C-2 *(Twin arms, slips over 4" pole. Weight: 26 lbs. EPA: 1.91)*

2. COLOR

WH	*Arctic White*	MDB	*Bronze Metallic*
BL	*Black*	VBU	*Verde Blue*
BLT	*Matte Black*	CRT	*Corten*
DB	*Dark Bronze*	MAL	*Matte Aluminum*
DGN	*Dark Green*	MG	*Medium Grey*
TT	*Titanium*	AGN	*Antique Green*
WDB	*Weathered Bronze*	LG	*Light Grey*
		RAL	*Premium Color*
		CUSTOM * *	*Contact Factory*

DIMENSIONS

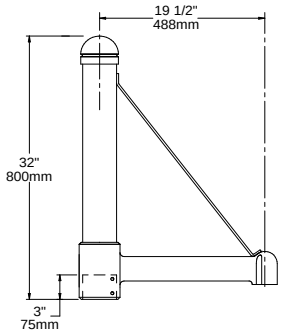

SLA20C *(4" pole)*

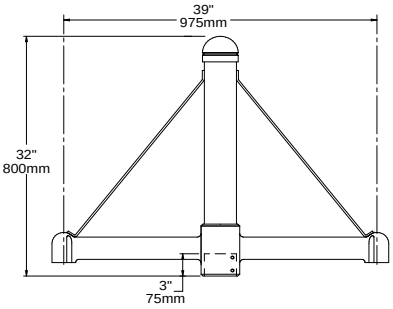

SLA20C-2 *(4" pole)*

SPECIFICATIONS

The arm shall be of one piece unitized aluminum construction, fully welded and assembled. The slip fitter shall be cast aluminum with an internal wireway and pole stop. The arm shall be prewired with a quick connector for easy installation.

The arm shall have a cast aluminum fitter welded to the top of the arm(s) for attaching the fixture. The fixture shall be mounted with three stainless steel bolts through the top of the arm fitter into the fixture. The attachment point shall have a silicone pad for sealing the fixture to arm connection.

The arm shall slip over a 4"/100mm or 5"/125mm diameter pole or tenon. The cast aluminum slip fitter shall have six stainless steel cup point set screws for securing the arm to the pole or tenon.

JOB _____

TYPE _____

NOTES _____

ARCHITECTURAL AREA LIGHTING
16555 East Gale Ave. | City of Industry | CA 91745
P 626.968.5666 | F 626.369.2695 | www.aal.net
Copyright © 2012 | REV 6.12

SLA17/SLA17(5)/SLA17-2/SLA17(5)-2 – Contemporary Arms | TYPE

SLA17

1. ARM	2. COLOR

1. ARM

SLA17 *(Slips over 4" pole. Weight: 18 lbs. EPA: 1.50)*
SLA17(5) *(Slips over 5" pole. Weight: 24 lbs. EPA: 2.20)*
SLA17-2 *(Twin arms, slips over 4" pole. Weight: 24 lbs. EPA: 2.05)*
SLA17(5)-2 *(Twin arms, slips over 5" pole . Weight: 33 lbs. EPA: 2.09)*

2. COLOR

WH	*Arctic White*	MDB	*Bronze Metallic*
BL	*Black*	VBU	*Verde Blue*
BLT	*Matte Black*	CRT	*Corten*
DB	*Dark Bronze*	MAL	*Matte Aluminum*
DGN	*Dark Green*	MG	*Medium Grey*
TT	*Titanium*	AGN	*Antique Green*
WDB	*Weathered Bronze*	LG	*Light Grey*
		RAL	*Premium Color*
		CUSTOM	** * Contact Factory*

DIMENSIONS

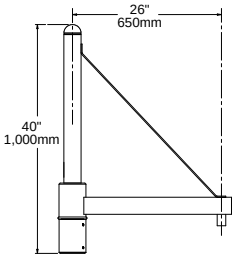

SLA17 *(4" pole)*

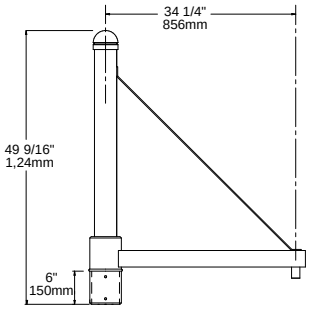

SLA17(5) *(5" pole)*

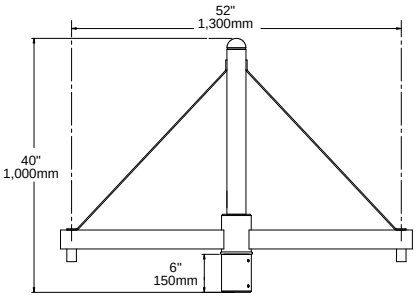

SLA17-2 *(4" pole)*

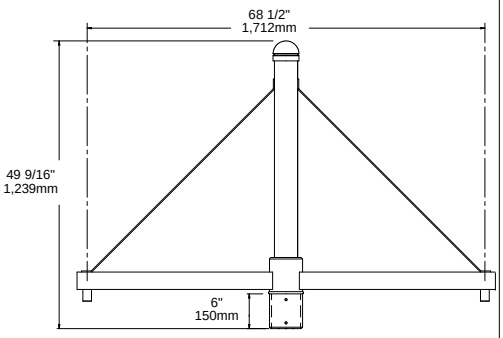

SLA17(5)-2 *(5" pole)*

SPECIFICATIONS

The arm shall be of one piece unitized aluminum construction, fully welded and assembled. The slip fitter shall be cast aluminum with an internal wireway and pole stop. The arm shall be prewired with a quick connector for easy installation.

The arm shall have a cast aluminum fitter welded to the top of the arm(s) for attaching the fixture. The fixture shall be mounted with three stainless steel bolts through the top of the arm fitter into the fixture. The attachment point shall have a silicone pad for sealing the fixture to arm connection.

The arm shall slip over a 4"/100mm or 5"/125mm diameter pole or tenon. The cast aluminum slip fitter shall have six stainless steel cup point set screws for securing the arm to the pole or tenon.

JOB _____

TYPE _____

NOTES _____

ARCHITECTURAL AREA LIGHTING
16555 East Gale Ave. | City of Industry | CA 91745
P 626.968.5666 | F 626.369.2695 | www.aal.net
Copyright © 2012 | REV 6.12

This drawing is property of Spring City Elect. Mfg. and is issued to the recipient with the understanding that it shall not be copied, duplicated, passed on to unauthorized parties, nor used for any purpose other than that for which it is specifically furnished except with Spring City's written permission.

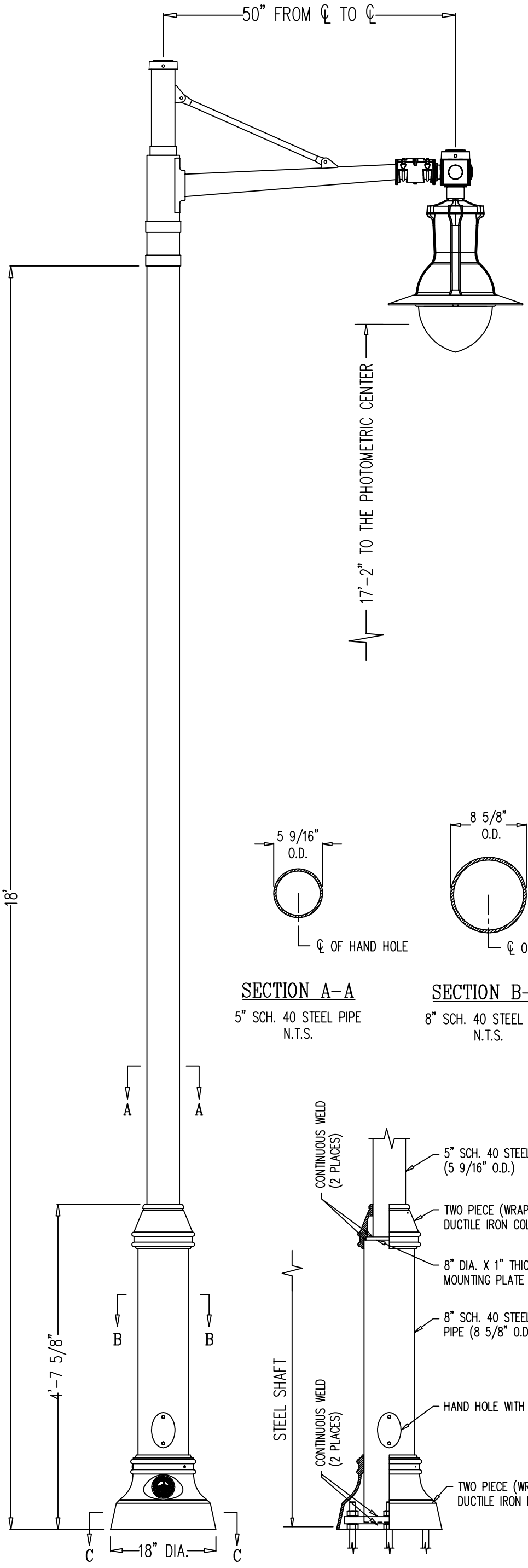

SECTION A–A

5" SCH. 40 STEEL PIPE
N.T.S.

SECTION B–B

8" SCH. 40 STEEL PIPE
N.T.S.

LOGO DETAIL

N.T.S.

LUMINAIRE SPECIFICATIONS

STYLE:	PEDESTRIAN STYLE COLUMBIA (WITH SPUN ALUMINUM SHADE)
HEIGHT:	26 5/16"
WIDTH:	23" DIAMETER
MATERIAL:	CAST ALUMINUM ALLOY A.N.S.I. 356, PER A.S.T.M. B26–95
GLOBE:	RIBBED GLASS
FINISH:	POWDER COAT – RIVER TEXTURE BLACK
LAMPING:	40 WATT LED
VOLTAGE:	ELECTRONICALLY WIRED AT 120–277 VOLTS
COLOR TEMPERATURE:	3000K (WARM WHITE)
DISTRIBUTION:	TYPE II/III (ASYMMETRIC DISTRIBUTION)
MODIFIER:	COLUMBIA LUMINAIRE ADAPTER
CATALOG NO.:	ALMPCL–LE040/EVX/X2–30–CR3–GR10–LACLB–CU

CROSS ARM SPECIFICATIONS

STYLE:	VERMONT CROSS ARM
HEIGHT:	34 7/8"
WIDTH:	50" FROM ℄ OF POLE TO ℄ OF LUMINAIRE
MATERIAL:	ALUMINUM PIPE W/CAST ALUMINUM ORNAMENTATION
FINISH:	POWDER COAT – RIVER TEXTURE BLACK
TENON:	2" THREADED PIPE
CATALOG NO.:	AARVRT–1S–50–TN2.00/NPT–CU

LAMP POST SPECIFICATIONS

STYLE:	CENTER CITY WITH STEEL SHAFT ASSEMBLY
HEIGHT:	18'
PHOTOMETRIC CENTER:	17'–2"
BASE:	18" DIAMETER
MATERIAL:	
SHAFT:	8" SCH 40 STEEL PIPE PEDESTAL (8 5/8" O.D.) 5" SCH 40 STEEL PIPE SHAFT (5 9/16" O.D.)
ORNAMENTATION:	(2) TWO PIECE WRAP AROUND CASTINGS, CAST DUCTILE IRON PER A.S.T.M. A536–84, GRADE 65–45–12
FINISH:	GALVANIZED STEEL THEN POWDER COAT – RIVER TEXTURE BLACK
ACCESS DOOR:	SECURED WITH 1/4–20 HEX HEAD BOLT (18–8)
GROUND PROVISIONS:	1/4"–20 UL LISTED GROUND STUD LOCATED OPPOSITE HANDHOLE (SUPPLIED BY SPRING CITY)
ANCHOR BOLTS:	(4) 1" DIA. X 30" + 4" HOOK (FULLY GALVANIZED WITH 2 GALVANIZED NUTS AND 2 GALVANIZED WASHERS PER BOLT)
BOLT PROJECTION:	3" REQUIRED
TENON:	4 1/2" DIA X 9" HIGH (TO EXCEPT CROSS ARM)
CATALOG NO.:	SPSCCD–SC4–18–18.00–TN4.50/9.00–CU

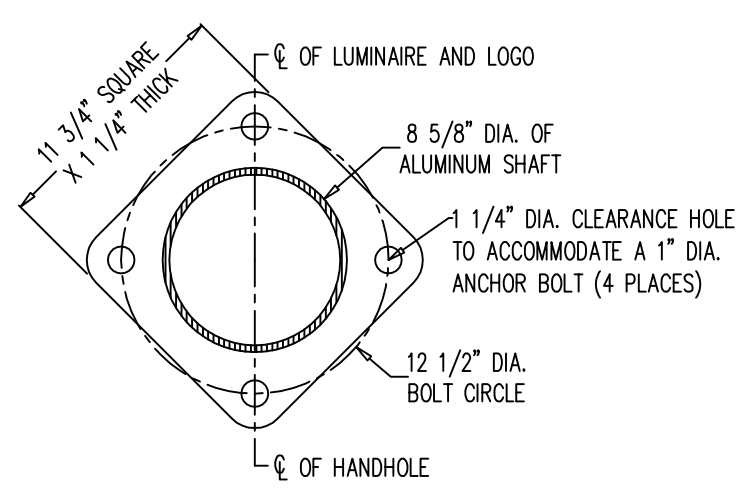

SECTION C–C

N.T.S.

⚠ REVISED BY: T.E.B. DATE: 11–10–17

Spring City Electrical Mfg. Co.
HALL AND MAIN STREETS – P.O. BOX 19 – SPRING CITY, PA. 19475
PHONE (610) 948–4000 – FAX (610) 948–5577 – WWW.SPRINGCITY.COM

DESCRIPTION	CENTER CITY STEEL SHAFT POST WITH THE VERMONT CROSS ARM AND COLUMBIA LED LUMINAIRE		
CUSTOMER / JOB	BURLINGTON, VT		
SCALE	DRAWN BY:	DATE	DRAWING NO.
N.T.S.	T.E.B.	4–26–17	S103396

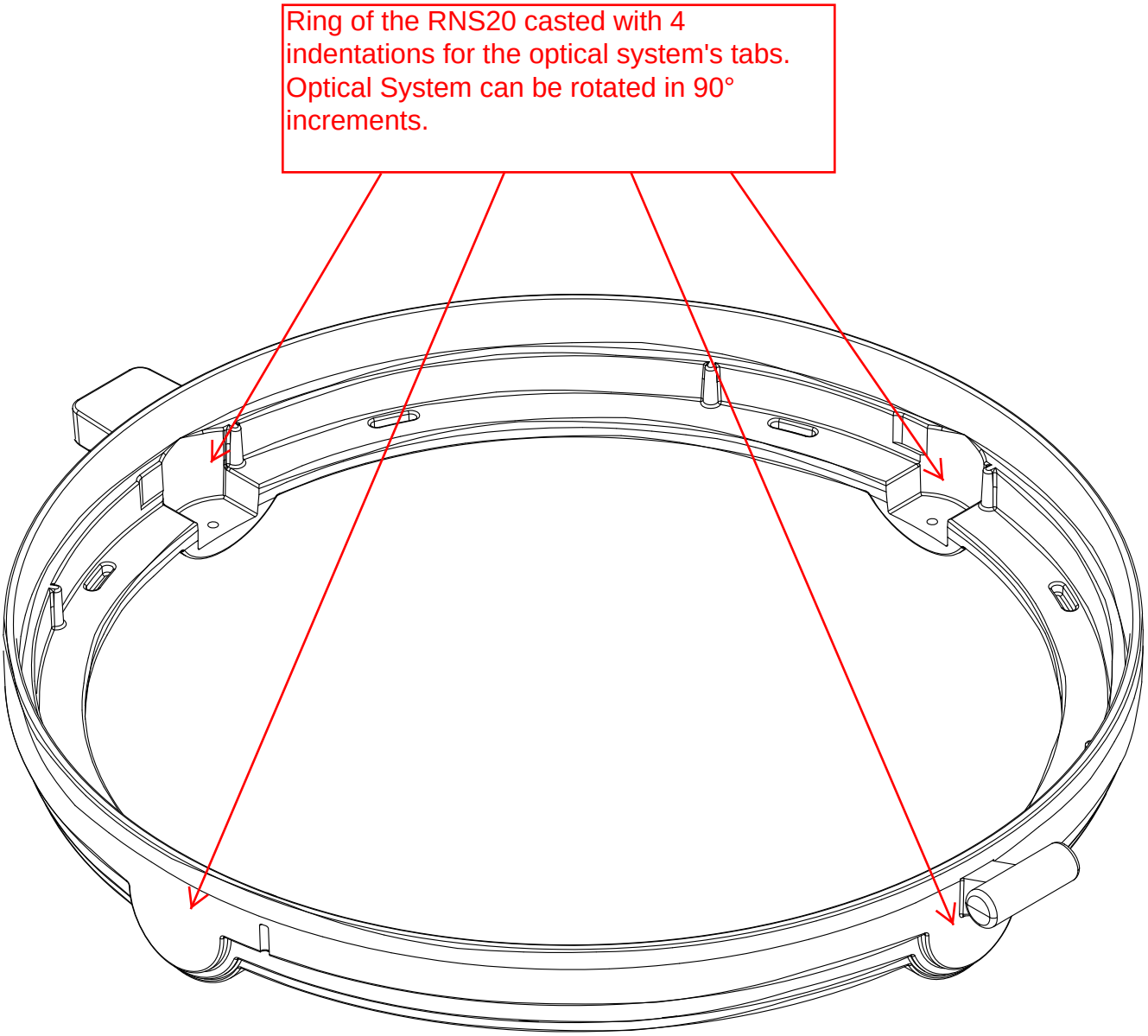
Ring of the RNS20 casted with 4 indentations for the optical system's tabs. Optical System can be rotated in 90° increments.

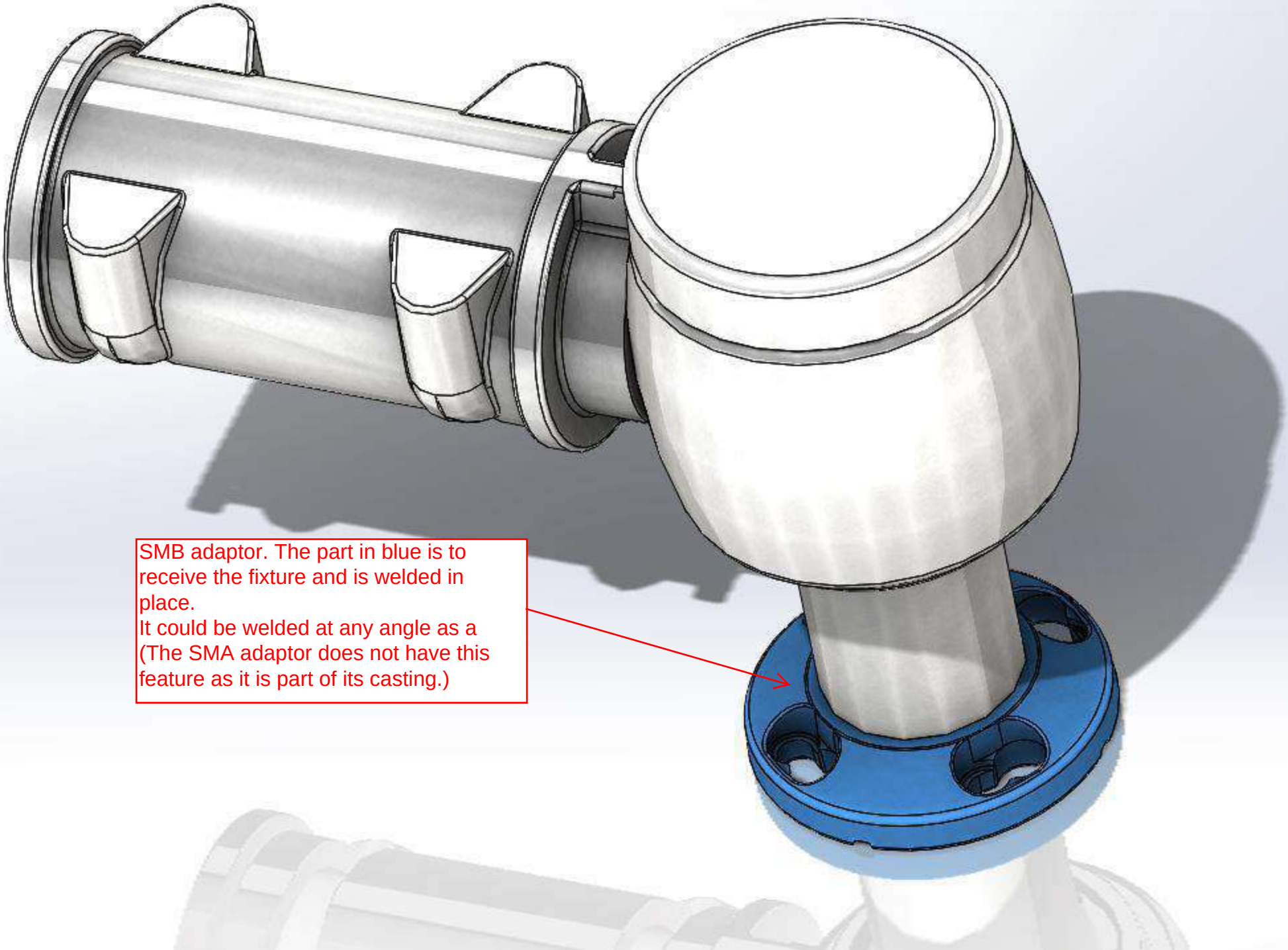
SMB adaptor. The part in blue is to receive the fixture and is welded in place.
It could be welded at any angle as a
(The SMA adaptor does not have this feature as it is part of its casting.)

New York empire lighting 16454: Lumec PC4/RNS (78726)

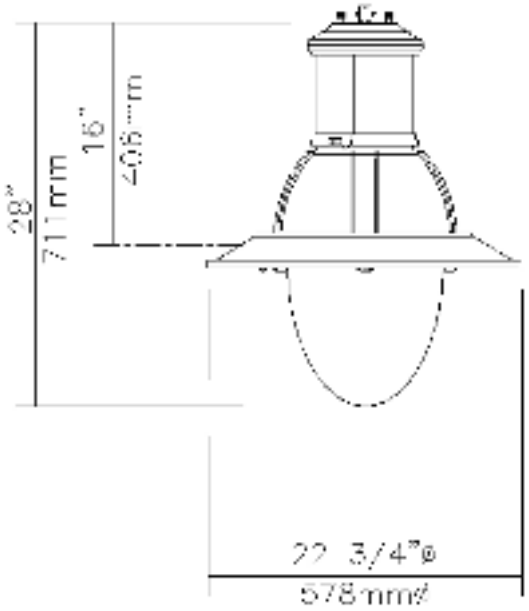

EPA: 1.43 sq ft / weight: 37 lb (16.8 kg)
Note: 3D image may not represent color or option selected.
Logos above include link, click to access.

		Type	**1A config**
Qty	**1**	Luminaire	**RNS20-[24W16LED3K-001]-T-ACDR-LE2-120-DMG-DE1-COLTX**

Description of Components:

Hood: Cast 356.1 aluminum dome, mechanically assembled on the housing, c/w a watertight grommet, mechanically assembled to the bracket with four bolts 3/8-16 UNC. This suspension system permits for a full rotation of the luminaire in 90 degree increments.

Housing: In a round shape, this housing is made of 356.1 aluminum, complete with a weatherproof door giving a tool-free access to the ballast, mechanically assembled. This suspension system permits for a full rotation of the luminaire in 90 degree increments.

Access-Mechanism: A gravity die cast 356 aluminum frame with latch and hinge. The mechanism shall offer tool-free access to the inside of the luminaire. An embedded memory-retentive gasket shall ensure weatherproofing.

Light Engine: LEDgine composed of 4 main components: **Heat Sink / LED Module / Optical System / Driver**
Electrical components are RoHS compliant.

Heat Sink: Made of cast aluminum optimising the LEDs efficiency and life. Product does not use any cooling device with moving parts (only passive cooling device).

Globe: (ACDR), Made of one-piece seamless injection-molded impact-resistant (DR) acrylic having an inner prismatic surface. Complete with a semi-prismatic house side shield and external glare softening prisms. The globe is mechanically assembled and sealed onto the lower part of the heat sink.

LED Module: LED type Philips Lumileds LUXEON T. Composed of 16 high-performance white LEDs. Color temperature as per ANSI/NEMA bin Warm White, 3000 Kelvin nominal (3045K +/- 175K or 2870K to 3220K), **CRI 80 Typical.**

Optical System: (LE2), IES type II (asymmetrical). Composed of high-performance optical grade PMMA acrylic refractor lenses to achieve desired distribution optimized to get maximum spacing, target lumens and a superior lighting uniformity. Optical system is rated IP66. Performance shall be tested per LM-63, LM-79 and TM-15 (IESNA) certifying its photometric performance. Street side indicated.

Driver: High power factor of 90% minimum. Electronic driver, operating range 50/60 Hz. **Auto-adjusting universal voltage input from 120 to 277 VAC rated for both application line to line or line to neutral, Class I**, THD of 20% max. Maximum ambient operating temperature from -40F(-40C) to 130F(55C) degrees. **Driver comes with dimming compatible 0-10 volts.**

The current supplying the LEDs will be reduced by the driver if the driver experiences internal overheating as a protection to the LEDs and the electrical components. Output is protected from short circuits, voltage overload and current overload. Automatic recovery after correction. Standard built-in driver surge protection of 2.5kV (min).

Driver Options: (DMG), Dimming compatible 0-10 volts. For applicable warranty, certification and operation guide see *"Philips Lumec dimmable luminaire specification document for unapproved device installed by other*". To get document, click on this link: Specification document or go on web site on this address: http://www.lumec.com/Lumec3DV2/PdfWebLink/Philips Lumec dimmable luminaire specification document for unapproved device installed by other.pdf

Surge Protector: Surge protector tested in accordance with ANSI/IEEE C62.45 per ANSI/IEEE C62.41.2 Scenario I Category C High Exposure 10kV/10kA waveforms for Line-Ground, Line-Neutral and Neutral-Ground, and in accordance with U.S. DOE (Department of Energy) MSSLC (Municipal Solid-State Street Lighting Consortium) model specification for LED roadway luminaires electrical immunity requirements for High Test Level 10kV / 10kA.

Luminaire Options: (DE1), Decorative skirt, made of spun aluminum, mechanically assembled.

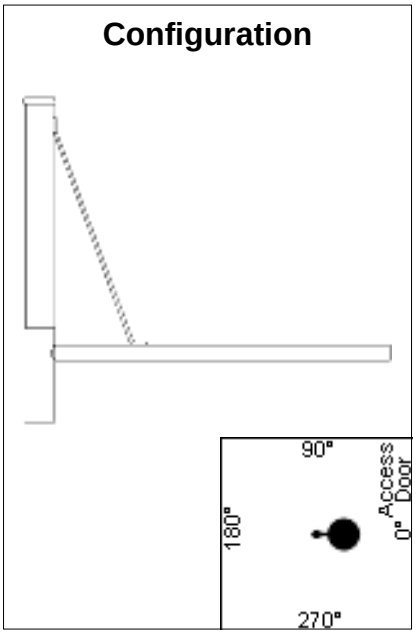

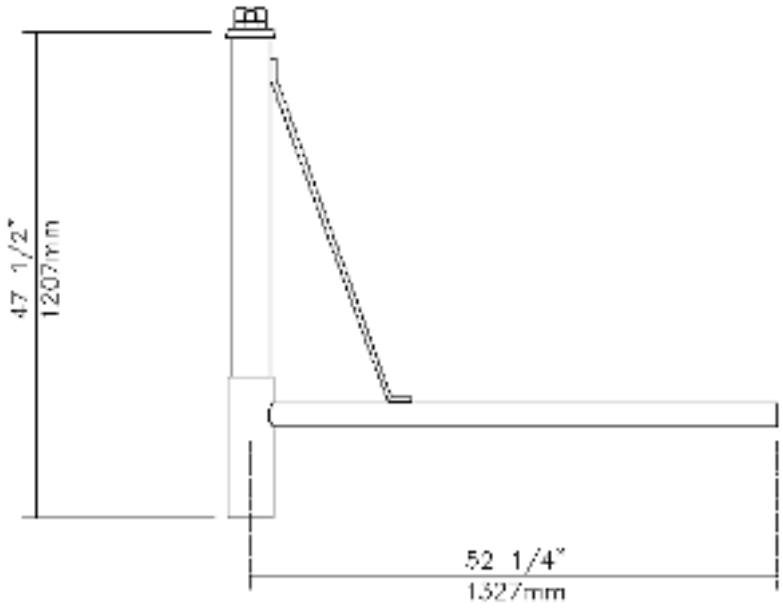

		Type	**1A config**
Qty	**1**	Bracket	**[PC-036]-1A-R5 9/16-PH8/120-TD-COLTX**

Description of Components:

Arm: Shall be made from aluminum tubing 6061-T6, 2 3/8" (60mm) outside diameter, welded.

Decorative Element: Bent decorative aluminum rod, 6063-T5 alloy, 1/2" (13mm) outside diameter, welded assembly.

Central Adaptor: Made of aluminum. Slip-fits 9" (229mm) over a 5 9/16" (141mm) outside diameter pole tenon. Mechanically fastened to the pole or tenon by two sets of three set-screws at 120 degrees around the bracket.

Bracket Options: (PH8/120),PH8 twist lock type photocell, 120 volt c/w receptacle. Connection done on site by others. (TD),Straight Tenon.

Note: Please note that this arm requires an adaptor to install the fixture.

-**SMB** for standard orientation.

- **(SMB-016)** for 45° orientation from standard.

Bracket Weight: 29 lbs (13.2 kg)

Base & Bolts Information

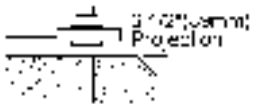

Comes with 4 steel anchor bolts, 1" X 33" + 3" J Type Bolts, 8 nuts and 8 washers. Important: Do not obstruct space between anchor plate and concrete base.

Anchor Plate

-Bolt Circle:
12 1/2" (318mm)

- Thickness:
1"(25mm)

- NOTE:
Bolt Circle Allowed:
11" to 13"
279mm to 330mm

Free opening

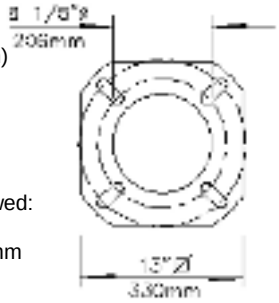

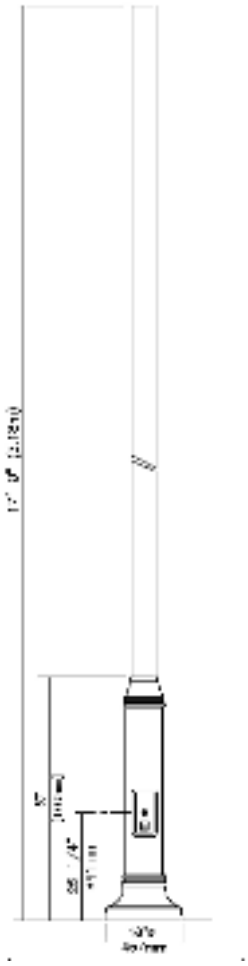

		Type	**1A config**
Qty	**1**	Pole	**SSM8V-17-COLTX**

Description of Components:

Pole Shaft: Shall be made from a 5 9/16" (141mm) round high tensile carbon steel tubing, having a 0.250" (6.4mm) wall thickness, welded to the pole base.

Joint Cover: Two-piece round joint cover made from cast 356 aluminum, mechanically fastened with stainless steel screws.

Pole Base: Shall be made from a 8 5/8" (219mm) round high tensile carbon steel tubing base having a 0.180" (4.6mm) wall thickness, welded to both the bottom and top of the anchor plate.

Maintenance Opening: The pole shall have a 4 1/2" x 10" (114mm x 254mm) maintenance opening centered 25 1/4" (641mm) from the bottom of the anchor plate, complete with a weatherproof embossed aluminum cover and a copper ground lug.

Base Cover: Two piece round base cover made from cast 356 aluminum, mechanically fastened with stainless steel screws.

Note: A tenon will be provided when the luminaire or bracket does not fit directly on pole shaft. Tenon not shown on the drawing.

IMPORTANT: Philips Lumec strongly recommends the installation of the complete lighting assembly with all of its accessories upon the anchoring of the pole. This will ensure that the structural integrity of the product is maintained throughout its lifetime.

Pole Weight: 247 lbs (112.3 kg)

Miscellaneous

Description of Components:

Wiring: Gauge (#14) TEW/AWM 1015 or 1230 wires, 6" (152mm) minimum exceeding top of the bracket.

Hardware: All exposed screws shall be complete with Ceramic primer-seal basecoat to reduce seizing of the parts and offers a high resistance to corrosion. All seals and sealing devices are made and/or lined with EPDM and/or silicone and/or rubber.

Anchor Bolts: Anchor bolts made of ASTM F1554-99 grade A36 or better steel having a minimum yield strength of 55,000 PSI. Nuts made of ASTM A563 grade A steel or better. The thread fit is ANSI class 2B regardless of bolt diameter. Washers are made of ASTM grade F-844 or better steel. All galvanized parts are hot dip galvanized per ACNOR G-164 minimum.

Finish: Textured color to be advised (Product Standard Color only): _____ (COLTX) and in accordance with the AAMA 2603 standard. Application of polyester powder coat paint (4 mils/100 microns) with ± 1 mils/24 microns of tolerance. The Thermosetting resins provides a discoloration resistant finish in accordance with the ASTM D2244 standard, as well as luster retention in keeping with the ASTM D523 standard and humidity proof in accordance with the ASTM D2247 standard.

The surface treatment achieves a minimum of 2000 hours for salt spray resistant finish in accordance with testing performed and per ASTM B117 standard.

Note: ***IMPORTANT: All missing details must be clearly specified on the return of these approval drawings. Thank you for your cooperation.***

COLOR:_____

Pole Information: (R5 9/16), Bracket to be mounted on top of a 5 9/16" (141mm) outside diameter round pole or tenon.

LED products manufacturing standard: The electronic components sensitive to electrostatic discharge (ESD) such as light emitting diodes (LEDs) are assembled in compliance with IEC61340-5-1 and ANSI/ESD S20.20 standards so as to eliminate ESD events that could decrease the useful life of the product.

Quality Control: The manufacturer must provide a written confirmation of its ISO 9001-2008 and ISO 14001-2004 International Quality Standards Certification.

Certification: The manufacturer will have to supply a copy of approval products certificate, CSA or UL.

Vibration Resistance: The RNS20 meets the **ANSI C136.31-2001**, American National Standard for Roadway Luminaire Vibration specifications for normal applications. (Tested for 1.5G over 100 000 cycles)

Mechanical resistance: This design information is intended as a general guideline only. The customer is solely responsible for proper selection of pole, luminaire, accessories and foundation under the given site conditions and intended usage. The addition of any other item to the pole may dramatically impact the wind load on that pole. It is strongly recommended that a qualified professional be consulted to analyze the loads given the user's specific needs to ensure proper selection of the pole, luminaire, accessories, and foundation. Philips Lumec assumes no responsibility for such complete analysis or product selection. Failure to insure proper site analysis, pole selection, loads and installation can result in pole failure, leading to serious injury or property damage.

Web site information details: Click on any specific information details you need:

Paint finish / Warranties / ISO 9001-2008 Certification / ISO 14001-2004 Certification / CSA Pole Certification

LED light engine technical information for RNS20-30

LED = Philips Lumileds Luxeon T, CRI = 70, CCT = 3000K nominal (3045K +/- 175K or 2870K to 3220K)

System (LED + driver) rated life = 100,000 hrs [1]

LED Module	Typical delivered lumens	Typical system wattage 2 (W)	Typical current @ 120 V (A)	Typical current @ 208 V (A)	Typical current @ 240 V (A)	Typical current @ 277 V (A)	LED current (mA)	HID Replacement 3	Luminaire Efficacy Rating (lm/W)	BUG rating
24W16LED3K-T-LE2	2824	28	0.25	0.15	0.13	0.12	530	70-100	100	B1-U2-G1
24W16LED3K-T-LE3	2802	28	0.25	0.15	0.13	0.12	530	70-100	100	B1-U2-G1
24W16LED3K-T-LE4	2817	28	0.25	0.15	0.13	0.12	530	70-100	100	B1-U2-G1
24W16LED3K-T-LE5	2763	28	0.25	0.15	0.13	0.12	530	70-100	98	B2-U2-G2
30W16LED3K-T-LE2	3552	37	0.32	0.19	0.17	0.15	700	70-100	97	B1-U2-G1
30W16LED3K-T-LE3	3525	37	0.32	0.19	0.17	0.15	700	70-100	96	B1-U2-G1
30W16LED3K-T-LE4	3543	37	0.32	0.19	0.17	0.15	700	70-100	96	B1-U2-G1
30W16LED3K-T-LE5	3484	37	0.32	0.19	0.17	0.15	700	70-100	95	B3-U2-G3
35W32LED3K-T-LE2	3907	36	0.31	0.19	0.17	0.16	350	70-100	109	B1-U2-G1
35W32LED3K-T-LE3	3877	36	0.31	0.19	0.17	0.16	350	70-100	108	B1-U2-G1
35W32LED3K-T-LE4	3897	36	0.31	0.19	0.17	0.16	350	70-100	108	B1-U2-G1
35W32LED3K-T-LE5	3929	36	0.31	0.19	0.17	0.16	350	70-100	109	B3-U2-G3
55W32LED3K-T-LE2	5522	53	0.47	0.27	0.24	0.22	530	100-150	103	B1-U3-G1
55W32LED3K-T-LE3	5480	53	0.47	0.27	0.24	0.22	530	100-150	103	B1-U3-G2
55W32LED3K-T-LE4	5508	53	0.47	0.27	0.24	0.22	530	100-150	103	B1-U3-G2
55W32LED3K-T-LE5	5567	53	0.47	0.27	0.24	0.22	530	100-150	104	B3-U3-G3

1 L70 = 100,000 hrs (at ambient temperature = 25°C).

2 System wattage or total luminaire wattage includes the LED module and the LED driver.

3 Note: These guidelines show typical replacements for the HID wattage ranges shown. Replacements should always be confirmed with a photometric layout.

Note: Due to rapid and continuous advances in LED technology, LED luminaire data is subject to change without notice and at the discretion of Philips.

New York empire lighting 16454: Lumec PC4/RNS (78726)

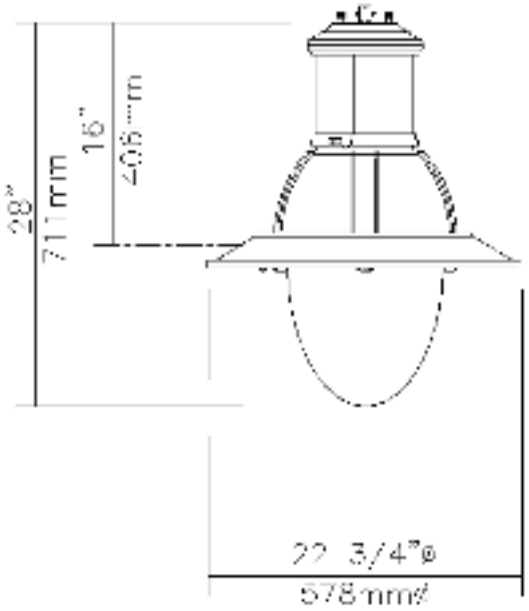

EPA: 1.43 sq ft / weight: 37 lb (16.8 kg)
Note: 3D image may not represent color or option selected.
Logos above include link, click to access.

		Type	**1 arm**
Qty	**1**	Luminaire	**RNS20-[55W32LED3K-003]-T-ACDR-LE2-120-DMG-DE1-COLTX**

Description of Components:

Hood: Cast 356.1 aluminum dome, mechanically assembled on the housing, c/w a watertight grommet, mechanically assembled to the bracket with four bolts 3/8-16 UNC. This suspension system permits for a full rotation of the luminaire in 90 degree increments.

Housing: In a round shape, this housing is made of 356.1 aluminum, complete with a weatherproof door giving a tool-free access to the ballast, mechanically assembled. This suspension system permits for a full rotation of the luminaire in 90 degree increments.

Access-Mechanism: A gravity die cast 356 aluminum frame with latch and hinge. The mechanism shall offer tool-free access to the inside of the luminaire. An embedded memory-retentive gasket shall ensure weatherproofing.

Light Engine: LEDgine composed of 4 main components: **Heat Sink / LED Module / Optical System / Driver**
Electrical components are RoHS compliant.

Heat Sink: Made of cast aluminum optimising the LEDs efficiency and life. Product does not use any cooling device with moving parts (only passive cooling device).

Globe: (ACDR), Made of one-piece seamless injection-molded impact-resistant (DR) acrylic having an inner prismatic surface. Complete with a semi-prismatic house side shield and external glare softening prisms. The globe is mechanically assembled and sealed onto the lower part of the heat sink.

LED Module: LED type Philips Lumileds LUXEON T. Composed of 32 high-performance white LEDs. Color temperature as per ANSI/NEMA bin Warm White, 3000 Kelvin nominal (3045K +/- 175K or 2870K to 3220K), **CRI 80 Typical.**

Optical System: (LE2), IES type II (asymmetrical). Composed of high-performance optical grade PMMA acrylic refractor lenses to achieve desired distribution optimized to get maximum spacing, target lumens and a superior lighting uniformity. Optical system is rated IP66. Performance shall be tested per LM-63, LM-79 and TM-15 (IESNA) certifying its photometric performance. Street side indicated.

Driver: High power factor of 90% minimum. Electronic driver, operating range 50/60 Hz. **Auto-adjusting universal voltage input from 120 to 277 VAC rated for both application line to line or line to neutral, Class I**, THD of 20% max. Maximum ambient operating temperature from -40F(-40C) to 130F(55C) degrees. **Driver comes with dimming compatible 0-10 volts.**

The current supplying the LEDs will be reduced by the driver if the driver experiences internal overheating as a protection to the LEDs and the electrical components. Output is protected from short circuits, voltage overload and current overload. Automatic recovery after correction. Standard built-in driver surge protection of 2.5kV (min).

Driver Options: (DMG), Dimming compatible 0-10 volts. For applicable warranty, certification and operation guide see *"Philips Lumec dimmable luminaire specification document for unapproved device installed by other*". To get document, click on this link: Specification document or go on web site on this address: http://www.lumec.com/Lumec3DV2/PdfWebLink/Philips Lumec dimmable luminaire specification document for unapproved device installed by other.pdf

Surge Protector: Surge protector tested in accordance with ANSI/IEEE C62.45 per ANSI/IEEE C62.41.2 Scenario I Category C High Exposure 10kV/10kA waveforms for Line-Ground, Line-Neutral and Neutral-Ground, and in accordance with U.S. DOE (Department of Energy) MSSLC (Municipal Solid-State Street Lighting Consortium) model specification for LED roadway luminaires electrical immunity requirements for High Test Level 10kV / 10kA.

Luminaire Options: (DE1), Decorative skirt, made of spun aluminum, mechanically assembled.

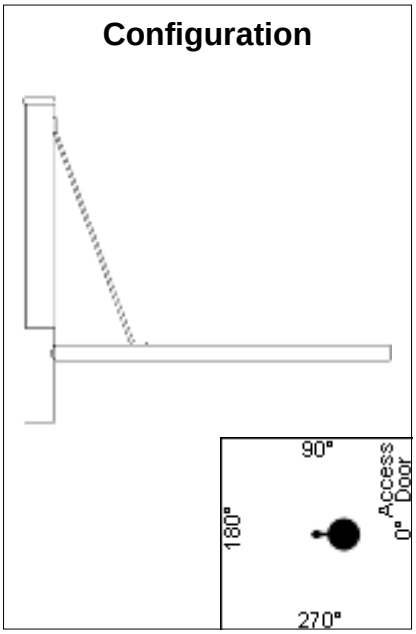

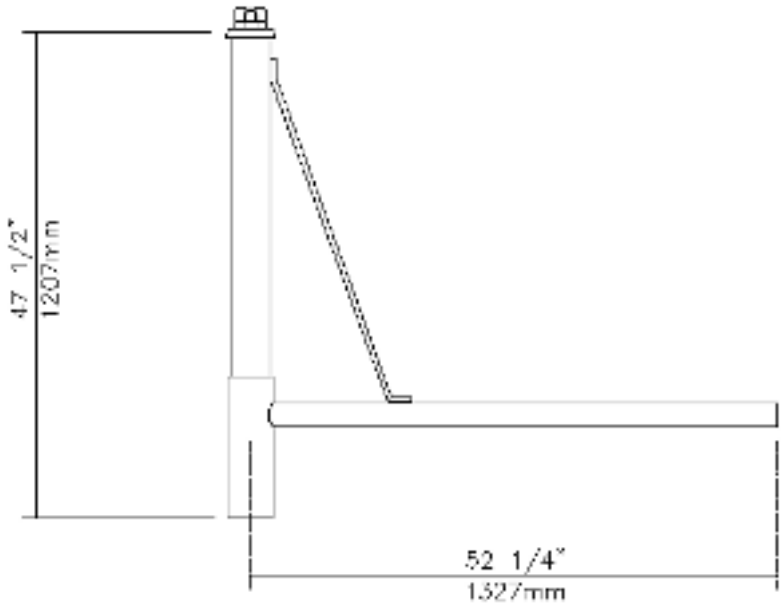

		Type	**1 arm**
Qty	**1**	Bracket	**[PC-036]-1A-R5 9/16-PH8/120-TD-COLTX**

Description of Components:

Arm: Shall be made from aluminum tubing 6061-T6, 2 3/8" (60mm) outside diameter, welded.

Decorative Element: Bent decorative aluminum rod, 6063-T5 alloy, 1/2" (13mm) outside diameter, welded assembly.

Central Adaptor: Made of aluminum. Slip-fits 9" (229mm) over a 5 9/16" (141mm) outside diameter pole tenon. Mechanically fastened to the pole or tenon by two sets of three set-screws at 120 degrees around the bracket.

Bracket Options: (PH8/120),PH8 twist lock type photocell, 120 volt c/w receptacle. Connection done on site by others. (TD),Straight Tenon.

Note: Please note that this arm requires an adaptor to install the fixture.

-**SMB** for standard orientation.

- **(SMB-016)** for 45° orientation from standard.

Bracket Weight: 29 lbs (13.2 kg)

Base & Bolts Information

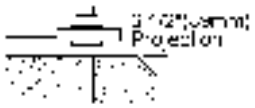

Comes with 4 steel anchor bolts, 1" X 33" + 3" J Type Bolts, 8 nuts and 8 washers. Important: Do not obstruct space between anchor plate and concrete base.

Anchor Plate

-Bolt Circle:
12 1/2" (318mm)

- Thickness:
1"(25mm)

- NOTE:
Bolt Circle Allowed:
11" to 13"
279mm to 330mm

Free opening

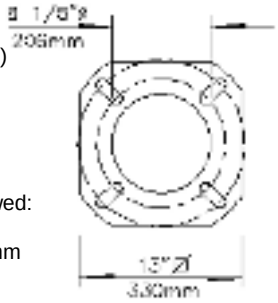

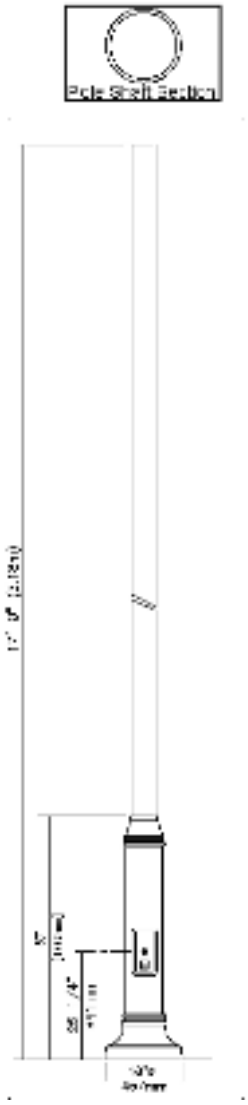

		Type	**1 arm**
Qty	**1**	Pole	**SSM8V-17-COLTX**

Description of Components:

Pole Shaft: Shall be made from a 5 9/16" (141mm) round high tensile carbon steel tubing, having a 0.250" (6.4mm) wall thickness, welded to the pole base.

Joint Cover: Two-piece round joint cover made from cast 356 aluminum, mechanically fastened with stainless steel screws.

Pole Base: Shall be made from a 8 5/8" (219mm) round high tensile carbon steel tubing base having a 0.180" (4.6mm) wall thickness, welded to both the bottom and top of the anchor plate.

Maintenance Opening: The pole shall have a 4 1/2" x 10" (114mm x 254mm) maintenance opening centered 25 1/4" (641mm) from the bottom of the anchor plate, complete with a weatherproof embossed aluminum cover and a copper ground lug.

Base Cover: Two piece round base cover made from cast 356 aluminum, mechanically fastened with stainless steel screws.

Note: A tenon will be provided when the luminaire or bracket does not fit directly on pole shaft. Tenon not shown on the drawing.

IMPORTANT: Philips Lumec strongly recommends the installation of the complete lighting assembly with all of its accessories upon the anchoring of the pole. This will ensure that the structural integrity of the product is maintained throughout its lifetime.

Pole Weight: 247 lbs (112.3 kg)

Miscellaneous

Description of Components:

Wiring: Gauge (#14) TEW/AWM 1015 or 1230 wires, 6" (152mm) minimum exceeding top of the bracket.

Hardware: All exposed screws shall be complete with Ceramic primer-seal basecoat to reduce seizing of the parts and offers a high resistance to corrosion. All seals and sealing devices are made and/or lined with EPDM and/or silicone and/or rubber.

Anchor Bolts: Anchor bolts made of ASTM F1554-99 grade A36 or better steel having a minimum yield strength of 55,000 PSI. Nuts made of ASTM A563 grade A steel or better. The thread fit is ANSI class 2B regardless of bolt diameter. Washers are made of ASTM grade F-844 or better steel. All galvanized parts are hot dip galvanized per ACNOR G-164 minimum.

Finish: Textured color to be advised (Product Standard Color only): _____ (COLTX) and in accordance with the AAMA 2603 standard. Application of polyester powder coat paint (4 mils/100 microns) with ± 1 mils/24 microns of tolerance. The Thermosetting resins provides a discoloration resistant finish in accordance with the ASTM D2244 standard, as well as luster retention in keeping with the ASTM D523 standard and humidity proof in accordance with the ASTM D2247 standard.

The surface treatment achieves a minimum of 2000 hours for salt spray resistant finish in accordance with testing performed and per ASTM B117 standard.

Note: ***IMPORTANT: All missing details must be clearly specified on the return of these approval drawings. Thank you for your cooperation.***

COLOR:_____

Pole Information: (R5 9/16), Bracket to be mounted on top of a 5 9/16" (141mm) outside diameter round pole or tenon.

LED products manufacturing standard: The electronic components sensitive to electrostatic discharge (ESD) such as light emitting diodes (LEDs) are assembled in compliance with IEC61340-5-1 and ANSI/ESD S20.20 standards so as to eliminate ESD events that could decrease the useful life of the product.

Quality Control: The manufacturer must provide a written confirmation of its ISO 9001-2008 and ISO 14001-2004 International Quality Standards Certification.

Certification: The manufacturer will have to supply a copy of approval products certificate, CSA or UL.

Vibration Resistance: The RNS20 meets the **ANSI C136.31-2001**, American National Standard for Roadway Luminaire Vibration specifications for normal applications. (Tested for 1.5G over 100 000 cycles)

Mechanical resistance: This design information is intended as a general guideline only. The customer is solely responsible for proper selection of pole, luminaire, accessories and foundation under the given site conditions and intended usage. The addition of any other item to the pole may dramatically impact the wind load on that pole. It is strongly recommended that a qualified professional be consulted to analyze the loads given the user's specific needs to ensure proper selection of the pole, luminaire, accessories, and foundation. Philips Lumec assumes no responsibility for such complete analysis or product selection. Failure to insure proper site analysis, pole selection, loads and installation can result in pole failure, leading to serious injury or property damage.

Web site information details: Click on any specific information details you need:

Paint finish / Warranties / ISO 9001-2008 Certification / ISO 14001-2004 Certification / CSA Pole Certification

LED light engine technical information for RNS20-30

LED = Philips Lumileds Luxeon T, CRI = 70, CCT = 3000K nominal (3045K +/- 175K or 2870K to 3220K)

System (LED + driver) rated life = 100,000 hrs [1]

LED Module	Typical delivered lumens	Typical system wattage 2 (W)	Typical current @ 120 V (A)	Typical current @ 208 V (A)	Typical current @ 240 V (A)	Typical current @ 277 V (A)	LED current (mA)	HID Replacement 3	Luminaire Efficacy Rating (lm/W)	BUG rating
24W16LED3K-T-LE2	2824	28	0.25	0.15	0.13	0.12	530	70-100	100	B1-U2-G1
24W16LED3K-T-LE3	2802	28	0.25	0.15	0.13	0.12	530	70-100	100	B1-U2-G1
24W16LED3K-T-LE4	2817	28	0.25	0.15	0.13	0.12	530	70-100	100	B1-U2-G1
24W16LED3K-T-LE5	2763	28	0.25	0.15	0.13	0.12	530	70-100	98	B2-U2-G2
30W16LED3K-T-LE2	3552	37	0.32	0.19	0.17	0.15	700	70-100	97	B1-U2-G1
30W16LED3K-T-LE3	3525	37	0.32	0.19	0.17	0.15	700	70-100	96	B1-U2-G1
30W16LED3K-T-LE4	3543	37	0.32	0.19	0.17	0.15	700	70-100	96	B1-U2-G1
30W16LED3K-T-LE5	3484	37	0.32	0.19	0.17	0.15	700	70-100	95	B3-U2-G3
35W32LED3K-T-LE2	3907	36	0.31	0.19	0.17	0.16	350	70-100	109	B1-U2-G1
35W32LED3K-T-LE3	3877	36	0.31	0.19	0.17	0.16	350	70-100	108	B1-U2-G1
35W32LED3K-T-LE4	3897	36	0.31	0.19	0.17	0.16	350	70-100	108	B1-U2-G1
35W32LED3K-T-LE5	3929	36	0.31	0.19	0.17	0.16	350	70-100	109	B3-U2-G3
55W32LED3K-T-LE2	5522	53	0.47	0.27	0.24	0.22	530	100-150	103	B1-U3-G1
55W32LED3K-T-LE3	5480	53	0.47	0.27	0.24	0.22	530	100-150	103	B1-U3-G2
55W32LED3K-T-LE4	5508	53	0.47	0.27	0.24	0.22	530	100-150	103	B1-U3-G2
55W32LED3K-T-LE5	5567	53	0.47	0.27	0.24	0.22	530	100-150	104	B3-U3-G3

1 L70 = 100,000 hrs (at ambient temperature = 25°C).

2 System wattage or total luminaire wattage includes the LED module and the LED driver.

3 Note: These guidelines show typical replacements for the HID wattage ranges shown. Replacements should always be confirmed with a photometric layout.

Note: Due to rapid and continuous advances in LED technology, LED luminaire data is subject to change without notice and at the discretion of Philips.

PHILIPS LUMEC

New York empire lighting 16454: Lumec PC4/RNS (78726)

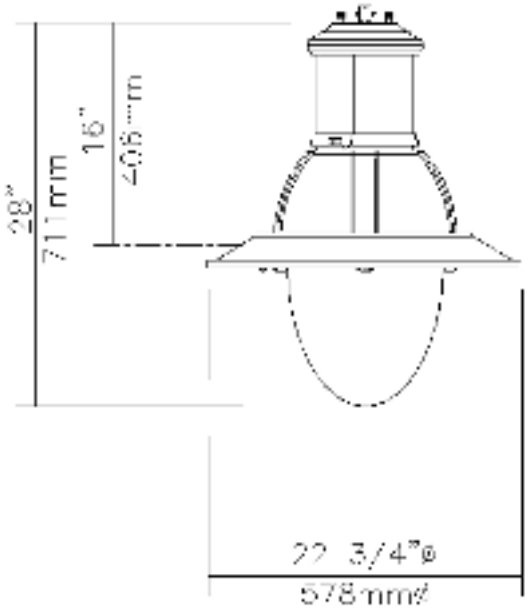

EPA: 1.43 sq ft / weight: 37 lb (16.8 kg)
Note: 3D image may not represent color or option selected.
Logos above include link, click to access.

		Type	**2 config**
Qty	**2**	Luminaire	**RNS20-[55W32LED3K-003]-T-ACDR-LE2-120-DMG-DE1-COLTX**

Description of Components:

Hood: Cast 356.1 aluminum dome, mechanically assembled on the housing, c/w a watertight grommet, mechanically assembled to the bracket with four bolts 3/8-16 UNC. This suspension system permits for a full rotation of the luminaire in 90 degree increments.

Housing: In a round shape, this housing is made of 356.1 aluminum, complete with a weatherproof door giving a tool-free access to the ballast, mechanically assembled. This suspension system permits for a full rotation of the luminaire in 90 degree increments.

Access-Mechanism: A gravity die cast 356 aluminum frame with latch and hinge. The mechanism shall offer tool-free access to the inside of the luminaire. An embedded memory-retentive gasket shall ensure weatherproofing.

Light Engine: LEDgine composed of 4 main components: **Heat Sink / LED Module / Optical System / Driver**
Electrical components are RoHS compliant.

Heat Sink: Made of cast aluminum optimising the LEDs efficiency and life. Product does not use any cooling device with moving parts (only passive cooling device).

Globe: (ACDR), Made of one-piece seamless injection-molded impact-resistant (DR) acrylic having an inner prismatic surface. Complete with a semi-prismatic house side shield and external glare softening prisms. The globe is mechanically assembled and sealed onto the lower part of the heat sink.

LED Module: LED type Philips Lumileds LUXEON T. Composed of 32 high-performance white LEDs. Color temperature as per ANSI/NEMA bin Warm White, 3000 Kelvin nominal (3045K +/- 175K or 2870K to 3220K), **CRI 80 Typical.**

Optical System: (LE2), IES type II (asymmetrical). Composed of high-performance optical grade PMMA acrylic refractor lenses to achieve desired distribution optimized to get maximum spacing, target lumens and a superior lighting uniformity. Optical system is rated IP66. Performance shall be tested per LM-63, LM-79 and TM-15 (IESNA) certifying its photometric performance. Street side indicated.

Driver: High power factor of 90% minimum. Electronic driver, operating range 50/60 Hz. **Auto-adjusting universal voltage input from 120 to 277 VAC rated for both application line to line or line to neutral, Class I**, THD of 20% max. Maximum ambient operating temperature from -40F(-40C) to 130F(55C) degrees. **Driver comes with dimming compatible 0-10 volts.**

The current supplying the LEDs will be reduced by the driver if the driver experiences internal overheating as a protection to the LEDs and the electrical components. Output is protected from short circuits, voltage overload and current overload. Automatic recovery after correction. Standard built-in driver surge protection of 2.5kV (min).

Driver Options: (DMG), Dimming compatible 0-10 volts. For applicable warranty, certification and operation guide see *"Philips Lumec dimmable luminaire specification document for unapproved device installed by other*". To get document, click on this link: Specification document or go on web site on this address: http://www.lumec.com/Lumec3DV2/PdfWebLink/Philips Lumec dimmable luminaire specification document for unapproved device installed by other.pdf

Surge Protector: Surge protector tested in accordance with ANSI/IEEE C62.45 per ANSI/IEEE C62.41.2 Scenario I Category C High Exposure 10kV/10kA waveforms for Line-Ground, Line-Neutral and Neutral-Ground, and in accordance with U.S. DOE (Department of Energy) MSSLC (Municipal Solid-State Street Lighting Consortium) model specification for LED roadway luminaires electrical immunity requirements for High Test Level 10kV / 10kA.

Luminaire Options: (DE1), Decorative skirt, made of spun aluminum, mechanically assembled.

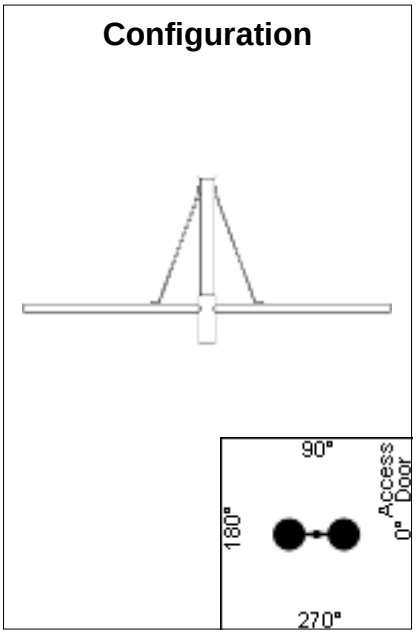

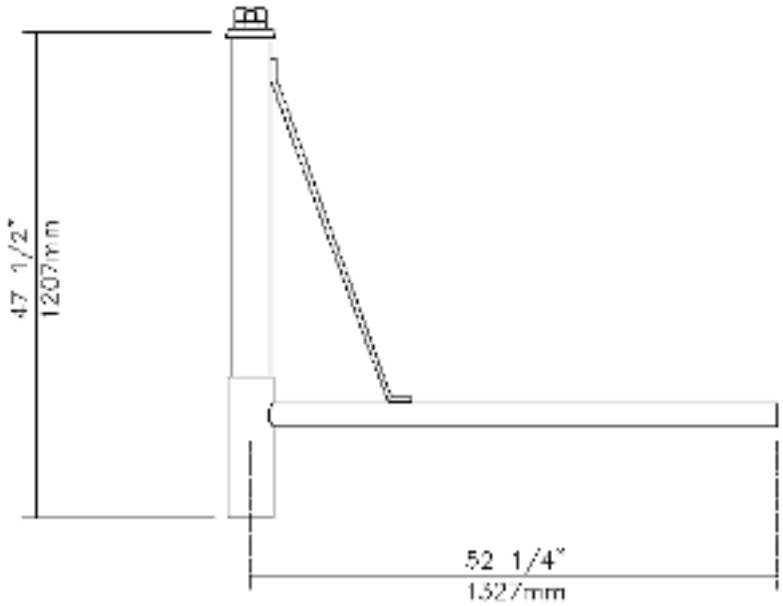

		Type	**2 config**
Qty	**1**	Bracket	**[PC-036]-2-R5 9/16-PH8/120-TD-COLTX**

Description of Components:

Arm: Shall be made from aluminum tubing 6061-T6, 2 3/8" (60mm) outside diameter, welded.

Decorative Element: Bent decorative aluminum rod, 6063-T5 alloy, 1/2" (13mm) outside diameter, welded assembly.

Central Adaptor: Made of aluminum. Slip-fits 9" (229mm) over a 5 9/16" (141mm) outside diameter pole tenon. Mechanically fastened to the pole or tenon by two sets of three set-screws at 120 degrees around the bracket.

Bracket Options: (PH8/120),PH8 twist lock type photocell, 120 volt c/w receptacle. Connection done on site by others. (TD),Straight Tenon.

Note: Please note that this arm requires an adaptor to install the fixture.

-**SMB** for standard orientation.

- **(SMB-016)** for 45° orientation from standard.

Bracket Weight: 47 lbs (21.4 kg)

Base & Bolts Information

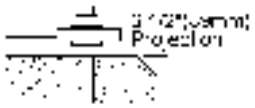

Comes with 4 steel anchor bolts, 1" X 33" + 3" J Type Bolts, 8 nuts and 8 washers. Important: Do not obstruct space between anchor plate and concrete base.

Anchor Plate

-Bolt Circle:
12 1/2" (318mm)

- Thickness:
1"(25mm)

- NOTE:
Bolt Circle Allowed:
11" to 13"
279mm to 330mm

Free opening

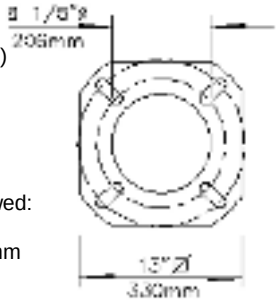

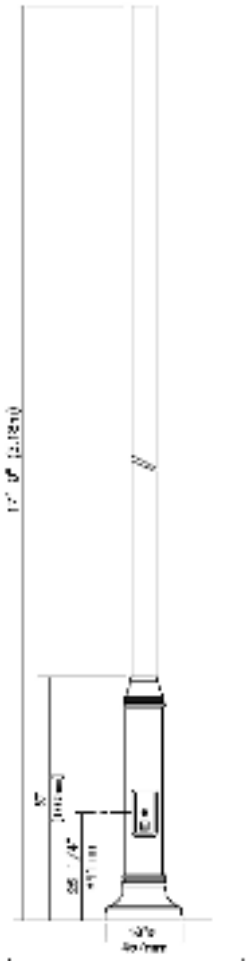

		Type	**2 config**
Qty	**1**	Pole	**SSM8V-17-COLTX**

Description of Components:

Pole Shaft: Shall be made from a 5 9/16" (141mm) round high tensile carbon steel tubing, having a 0.250" (6.4mm) wall thickness, welded to the pole base.

Joint Cover: Two-piece round joint cover made from cast 356 aluminum, mechanically fastened with stainless steel screws.

Pole Base: Shall be made from a 8 5/8" (219mm) round high tensile carbon steel tubing base having a 0.180" (4.6mm) wall thickness, welded to both the bottom and top of the anchor plate.

Maintenance Opening: The pole shall have a 4 1/2" x 10" (114mm x 254mm) maintenance opening centered 25 1/4" (641mm) from the bottom of the anchor plate, complete with a weatherproof embossed aluminum cover and a copper ground lug.

Base Cover: Two piece round base cover made from cast 356 aluminum, mechanically fastened with stainless steel screws.

Note: A tenon will be provided when the luminaire or bracket does not fit directly on pole shaft. Tenon not shown on the drawing.

IMPORTANT: Philips Lumec strongly recommends the installation of the complete lighting assembly with all of its accessories upon the anchoring of the pole. This will ensure that the structural integrity of the product is maintained throughout its lifetime.

Pole Weight: 247 lbs (112.3 kg)

Miscellaneous

Description of Components:

Wiring: Gauge (#14) TEW/AWM 1015 or 1230 wires, 6" (152mm) minimum exceeding top of the bracket.

Hardware: All exposed screws shall be complete with Ceramic primer-seal basecoat to reduce seizing of the parts and offers a high resistance to corrosion. All seals and sealing devices are made and/or lined with EPDM and/or silicone and/or rubber.

Anchor Bolts: Anchor bolts made of ASTM F1554-99 grade A36 or better steel having a minimum yield strength of 55,000 PSI. Nuts made of ASTM A563 grade A steel or better. The thread fit is ANSI class 2B regardless of bolt diameter. Washers are made of ASTM grade F-844 or better steel. All galvanized parts are hot dip galvanized per ACNOR G-164 minimum.

Finish: Textured color to be advised (Product Standard Color only): _____ (COLTX) and in accordance with the AAMA 2603 standard. Application of polyester powder coat paint (4 mils/100 microns) with ± 1 mils/24 microns of tolerance. The Thermosetting resins provides a discoloration resistant finish in accordance with the ASTM D2244 standard, as well as luster retention in keeping with the ASTM D523 standard and humidity proof in accordance with the ASTM D2247 standard.

The surface treatment achieves a minimum of 2000 hours for salt spray resistant finish in accordance with testing performed and per ASTM B117 standard.

Note: ***IMPORTANT: All missing details must be clearly specified on the return of these approval drawings. Thank you for your cooperation.***

COLOR:_____

Pole Information: (R5 9/16), Bracket to be mounted on top of a 5 9/16" (141mm) outside diameter round pole or tenon.

LED products manufacturing standard: The electronic components sensitive to electrostatic discharge (ESD) such as light emitting diodes (LEDs) are assembled in compliance with IEC61340-5-1 and ANSI/ESD S20.20 standards so as to eliminate ESD events that could decrease the useful life of the product.

Quality Control: The manufacturer must provide a written confirmation of its ISO 9001-2008 and ISO 14001-2004 International Quality Standards Certification.

Certification: The manufacturer will have to supply a copy of approval products certificate, CSA or UL.

Vibration Resistance: The RNS20 meets the **ANSI C136.31-2001**, American National Standard for Roadway Luminaire Vibration specifications for normal applications. (Tested for 1.5G over 100 000 cycles)

Mechanical resistance: This design information is intended as a general guideline only. The customer is solely responsible for proper selection of pole, luminaire, accessories and foundation under the given site conditions and intended usage. The addition of any other item to the pole may dramatically impact the wind load on that pole. It is strongly recommended that a qualified professional be consulted to analyze the loads given the user's specific needs to ensure proper selection of the pole, luminaire, accessories, and foundation. Philips Lumec assumes no responsibility for such complete analysis or product selection. Failure to insure proper site analysis, pole selection, loads and installation can result in pole failure, leading to serious injury or property damage.

Web site information details: Click on any specific information details you need:

Paint finish / Warranties / ISO 9001-2008 Certification / ISO 14001-2004 Certification / CSA Pole Certification

LED light engine technical information for RNS20-30

LED = Philips Lumileds Luxeon T, CRI = 70, CCT = 3000K nominal (3045K +/- 175K or 2870K to 3220K)

System (LED + driver) rated life = 100,000 hrs [1]

LED Module	Typical delivered lumens	Typical system wattage 2 (W)	Typical current @ 120 V (A)	Typical current @ 208 V (A)	Typical current @ 240 V (A)	Typical current @ 277 V (A)	LED current (mA)	HID Replacement 3	Luminaire Efficacy Rating (lm/W)	BUG rating
24W16LED3K-T-LE2	2824	28	0.25	0.15	0.13	0.12	530	70-100	100	B1-U2-G1
24W16LED3K-T-LE3	2802	28	0.25	0.15	0.13	0.12	530	70-100	100	B1-U2-G1
24W16LED3K-T-LE4	2817	28	0.25	0.15	0.13	0.12	530	70-100	100	B1-U2-G1
24W16LED3K-T-LE5	2763	28	0.25	0.15	0.13	0.12	530	70-100	98	B2-U2-G2
30W16LED3K-T-LE2	3552	37	0.32	0.19	0.17	0.15	700	70-100	97	B1-U2-G1
30W16LED3K-T-LE3	3525	37	0.32	0.19	0.17	0.15	700	70-100	96	B1-U2-G1
30W16LED3K-T-LE4	3543	37	0.32	0.19	0.17	0.15	700	70-100	96	B1-U2-G1
30W16LED3K-T-LE5	3484	37	0.32	0.19	0.17	0.15	700	70-100	95	B3-U2-G3
35W32LED3K-T-LE2	3907	36	0.31	0.19	0.17	0.16	350	70-100	109	B1-U2-G1
35W32LED3K-T-LE3	3877	36	0.31	0.19	0.17	0.16	350	70-100	108	B1-U2-G1
35W32LED3K-T-LE4	3897	36	0.31	0.19	0.17	0.16	350	70-100	108	B1-U2-G1
35W32LED3K-T-LE5	3929	36	0.31	0.19	0.17	0.16	350	70-100	109	B3-U2-G3
55W32LED3K-T-LE2	5522	53	0.47	0.27	0.24	0.22	530	100-150	103	B1-U3-G1
55W32LED3K-T-LE3	5480	53	0.47	0.27	0.24	0.22	530	100-150	103	B1-U3-G2
55W32LED3K-T-LE4	5508	53	0.47	0.27	0.24	0.22	530	100-150	103	B1-U3-G2
55W32LED3K-T-LE5	5567	53	0.47	0.27	0.24	0.22	530	100-150	104	B3-U3-G3

1 L70 = 100,000 hrs (at ambient temperature = 25°C).

2 System wattage or total luminaire wattage includes the LED module and the LED driver.

3 Note: These guidelines show typical replacements for the HID wattage ranges shown. Replacements should always be confirmed with a photometric layout.

Note: Due to rapid and continuous advances in LED technology, LED luminaire data is subject to change without notice and at the discretion of Philips.

New York empire lighting 16454: Lumec PC4/RNS (78726)

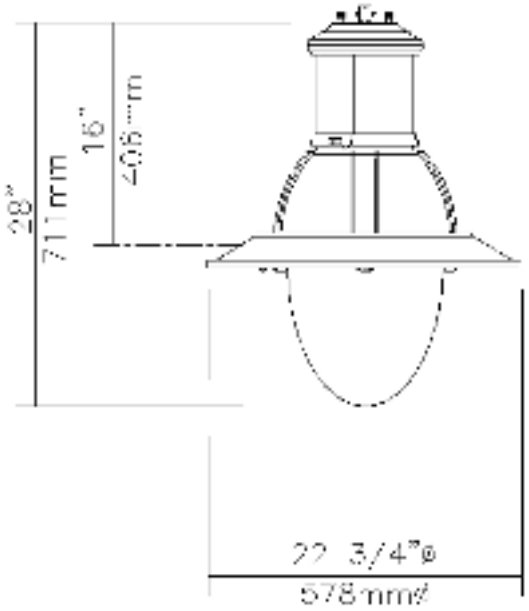

EPA: 1.43 sq ft / weight: 37 lb (16.8 kg)
Note: 3D image may not represent color or option selected.
Logos above include link, click to access.

		Type	**2 config**
Qty	**2**	Luminaire	**RNS20-[24W16LED3K-001]-T-ACDR-LE2-120-DMG-DE1-COLTX**

Description of Components:

Hood: Cast 356.1 aluminum dome, mechanically assembled on the housing, c/w a watertight grommet, mechanically assembled to the bracket with four bolts 3/8-16 UNC. This suspension system permits for a full rotation of the luminaire in 90 degree increments.

Housing: In a round shape, this housing is made of 356.1 aluminum, complete with a weatherproof door giving a tool-free access to the ballast, mechanically assembled. This suspension system permits for a full rotation of the luminaire in 90 degree increments.

Access-Mechanism: A gravity die cast 356 aluminum frame with latch and hinge. The mechanism shall offer tool-free access to the inside of the luminaire. An embedded memory-retentive gasket shall ensure weatherproofing.

Light Engine: LEDgine composed of 4 main components: **Heat Sink / LED Module / Optical System / Driver**
Electrical components are RoHS compliant.

Heat Sink: Made of cast aluminum optimising the LEDs efficiency and life. Product does not use any cooling device with moving parts (only passive cooling device).

Globe: (ACDR), Made of one-piece seamless injection-molded impact-resistant (DR) acrylic having an inner prismatic surface. Complete with a semi-prismatic house side shield and external glare softening prisms. The globe is mechanically assembled and sealed onto the lower part of the heat sink.

LED Module: LED type Philips Lumileds LUXEON T. Composed of 16 high-performance white LEDs. Color temperature as per ANSI/NEMA bin Warm White, 3000 Kelvin nominal (3045K +/- 175K or 2870K to 3220K), **CRI 80 Typical.**

Optical System: (LE2), IES type II (asymmetrical). Composed of high-performance optical grade PMMA acrylic refractor lenses to achieve desired distribution optimized to get maximum spacing, target lumens and a superior lighting uniformity. Optical system is rated IP66. Performance shall be tested per LM-63, LM-79 and TM-15 (IESNA) certifying its photometric performance. Street side indicated.

Driver: High power factor of 90% minimum. Electronic driver, operating range 50/60 Hz. **Auto-adjusting universal voltage input from 120 to 277 VAC rated for both application line to line or line to neutral, Class I**, THD of 20% max. Maximum ambient operating temperature from -40F(-40C) to 130F(55C) degrees. **Driver comes with dimming compatible 0-10 volts.**

The current supplying the LEDs will be reduced by the driver if the driver experiences internal overheating as a protection to the LEDs and the electrical components. Output is protected from short circuits, voltage overload and current overload. Automatic recovery after correction. Standard built-in driver surge protection of 2.5kV (min).

Driver Options: (DMG), Dimming compatible 0-10 volts. For applicable warranty, certification and operation guide see *"Philips Lumec dimmable luminaire specification document for unapproved device installed by other*". To get document, click on this link: Specification document or go on web site on this address: http://www.lumec.com/Lumec3DV2/PdfWebLink/Philips Lumec dimmable luminaire specification document for unapproved device installed by other.pdf

Surge Protector: Surge protector tested in accordance with ANSI/IEEE C62.45 per ANSI/IEEE C62.41.2 Scenario I Category C High Exposure 10kV/10kA waveforms for Line-Ground, Line-Neutral and Neutral-Ground, and in accordance with U.S. DOE (Department of Energy) MSSLC (Municipal Solid-State Street Lighting Consortium) model specification for LED roadway luminaires electrical immunity requirements for High Test Level 10kV / 10kA.

Luminaire Options: (DE1), Decorative skirt, made of spun aluminum, mechanically assembled.

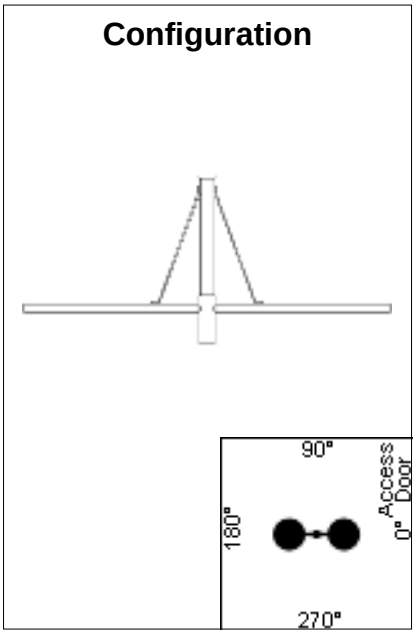

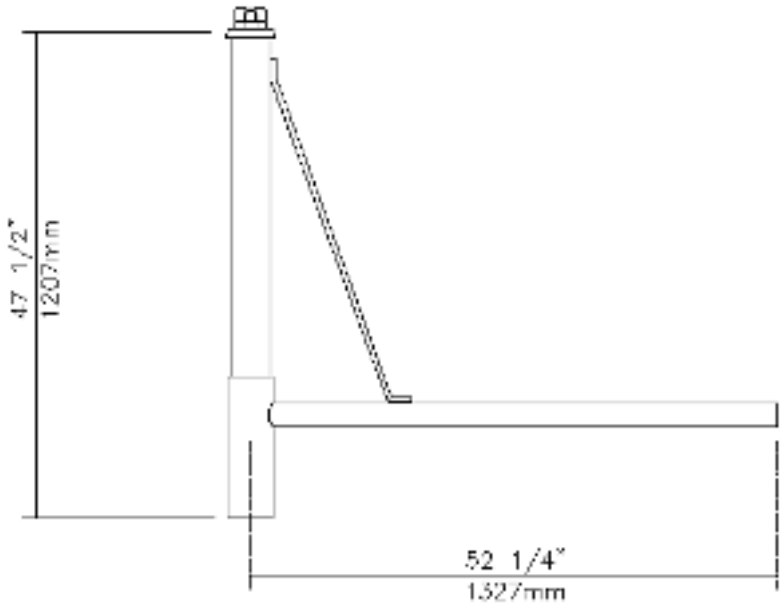

		Type	**2 config**
Qty	**1**	Bracket	**[PC-036]-2-R5 9/16-PH8/120-TD-COLTX**

Description of Components:

Arm: Shall be made from aluminum tubing 6061-T6, 2 3/8" (60mm) outside diameter, welded.

Decorative Element: Bent decorative aluminum rod, 6063-T5 alloy, 1/2" (13mm) outside diameter, welded assembly.

Central Adaptor: Made of aluminum. Slip-fits 9" (229mm) over a 5 9/16" (141mm) outside diameter pole tenon. Mechanically fastened to the pole or tenon by two sets of three set-screws at 120 degrees around the bracket.

Bracket Options: (PH8/120),PH8 twist lock type photocell, 120 volt c/w receptacle. Connection done on site by others. (TD),Straight Tenon.

Note: Please note that this arm requires an adaptor to install the fixture.

-**SMB** for standard orientation.

- **(SMB-016)** for 45° orientation from standard.

Bracket Weight: 47 lbs (21.4 kg)

Base & Bolts Information

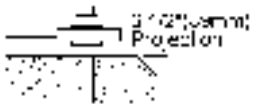

Comes with 4 steel anchor bolts, 1" X 33" + 3" J Type Bolts, 8 nuts and 8 washers. Important: Do not obstruct space between anchor plate and concrete base.

Anchor Plate

-Bolt Circle:
12 1/2" (318mm)

- Thickness:
1"(25mm)

- NOTE:
Bolt Circle Allowed:
11" to 13"
279mm to 330mm

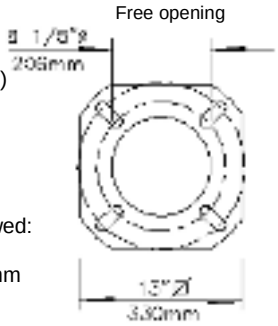

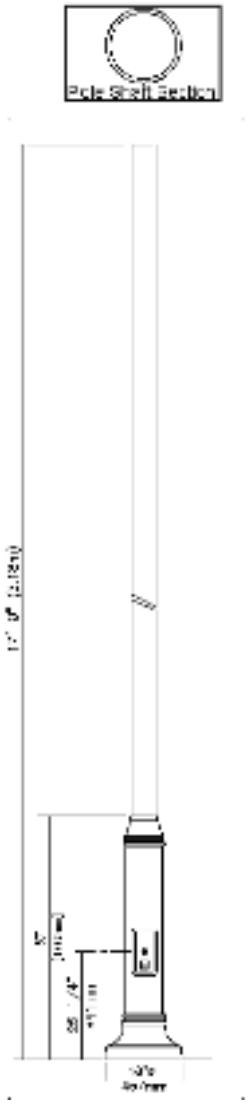

		Type	**2 config**
Qty	**1**	Pole	**SSM8V-17-COLTX**

Description of Components:

Pole Shaft: Shall be made from a 5 9/16" (141mm) round high tensile carbon steel tubing, having a 0.250" (6.4mm) wall thickness, welded to the pole base.

Joint Cover: Two-piece round joint cover made from cast 356 aluminum, mechanically fastened with stainless steel screws.

Pole Base: Shall be made from a 8 5/8" (219mm) round high tensile carbon steel tubing base having a 0.180" (4.6mm) wall thickness, welded to both the bottom and top of the anchor plate.

Maintenance Opening: The pole shall have a 4 1/2" x 10" (114mm x 254mm) maintenance opening centered 25 1/4" (641mm) from the bottom of the anchor plate, complete with a weatherproof embossed aluminum cover and a copper ground lug.

Base Cover: Two piece round base cover made from cast 356 aluminum, mechanically fastened with stainless steel screws.

Note: A tenon will be provided when the luminaire or bracket does not fit directly on pole shaft. Tenon not shown on the drawing.

IMPORTANT: Philips Lumec strongly recommends the installation of the complete lighting assembly with all of its accessories upon the anchoring of the pole. This will ensure that the structural integrity of the product is maintained throughout its lifetime.

Pole Weight: 247 lbs (112.3 kg)

Miscellaneous

Description of Components:

Wiring: Gauge (#14) TEW/AWM 1015 or 1230 wires, 6" (152mm) minimum exceeding top of the bracket.

Hardware: All exposed screws shall be complete with Ceramic primer-seal basecoat to reduce seizing of the parts and offers a high resistance to corrosion. All seals and sealing devices are made and/or lined with EPDM and/or silicone and/or rubber.

Anchor Bolts: Anchor bolts made of ASTM F1554-99 grade A36 or better steel having a minimum yield strength of 55,000 PSI. Nuts made of ASTM A563 grade A steel or better. The thread fit is ANSI class 2B regardless of bolt diameter. Washers are made of ASTM grade F-844 or better steel. All galvanized parts are hot dip galvanized per ACNOR G-164 minimum.

Finish: Textured color to be advised (Product Standard Color only): _____ (COLTX) and in accordance with the AAMA 2603 standard. Application of polyester powder coat paint (4 mils/100 microns) with ± 1 mils/24 microns of tolerance. The Thermosetting resins provides a discoloration resistant finish in accordance with the ASTM D2244 standard, as well as luster retention in keeping with the ASTM D523 standard and humidity proof in accordance with the ASTM D2247 standard.

The surface treatment achieves a minimum of 2000 hours for salt spray resistant finish in accordance with testing performed and per ASTM B117 standard.

Note: ***IMPORTANT: All missing details must be clearly specified on the return of these approval drawings. Thank you for your cooperation.***

COLOR:_____

Pole Information: (R5 9/16), Bracket to be mounted on top of a 5 9/16" (141mm) outside diameter round pole or tenon.

LED products manufacturing standard: The electronic components sensitive to electrostatic discharge (ESD) such as light emitting diodes (LEDs) are assembled in compliance with IEC61340-5-1 and ANSI/ESD S20.20 standards so as to eliminate ESD events that could decrease the useful life of the product.

Quality Control: The manufacturer must provide a written confirmation of its ISO 9001-2008 and ISO 14001-2004 International Quality Standards Certification.

Certification: The manufacturer will have to supply a copy of approval products certificate, CSA or UL.

Vibration Resistance: The RNS20 meets the **ANSI C136.31-2001**, American National Standard for Roadway Luminaire Vibration specifications for normal applications. (Tested for 1.5G over 100 000 cycles)

Mechanical resistance: This design information is intended as a general guideline only. The customer is solely responsible for proper selection of pole, luminaire, accessories and foundation under the given site conditions and intended usage. The addition of any other item to the pole may dramatically impact the wind load on that pole. It is strongly recommended that a qualified professional be consulted to analyze the loads given the user's specific needs to ensure proper selection of the pole, luminaire, accessories, and foundation. Philips Lumec assumes no responsibility for such complete analysis or product selection. Failure to insure proper site analysis, pole selection, loads and installation can result in pole failure, leading to serious injury or property damage.

Web site information details: Click on any specific information details you need:

Paint finish / Warranties / ISO 9001-2008 Certification / ISO 14001-2004 Certification / CSA Pole Certification

LED light engine technical information for RNS20-30

LED = Philips Lumileds Luxeon T, CRI = 70, CCT = 3000K nominal (3045K +/- 175K or 2870K to 3220K)

System (LED + driver) rated life = 100,000 hrs [1]

LED Module	Typical delivered lumens	Typical system wattage 2 (W)	Typical current @ 120 V (A)	Typical current @ 208 V (A)	Typical current @ 240 V (A)	Typical current @ 277 V (A)	LED current (mA)	HID Replacement 3	Luminaire Efficacy Rating (lm/W)	BUG rating
24W16LED3K-T-LE2	2824	28	0.25	0.15	0.13	0.12	530	70-100	100	B1-U2-G1
24W16LED3K-T-LE3	2802	28	0.25	0.15	0.13	0.12	530	70-100	100	B1-U2-G1
24W16LED3K-T-LE4	2817	28	0.25	0.15	0.13	0.12	530	70-100	100	B1-U2-G1
24W16LED3K-T-LE5	2763	28	0.25	0.15	0.13	0.12	530	70-100	98	B2-U2-G2
30W16LED3K-T-LE2	3552	37	0.32	0.19	0.17	0.15	700	70-100	97	B1-U2-G1
30W16LED3K-T-LE3	3525	37	0.32	0.19	0.17	0.15	700	70-100	96	B1-U2-G1
30W16LED3K-T-LE4	3543	37	0.32	0.19	0.17	0.15	700	70-100	96	B1-U2-G1
30W16LED3K-T-LE5	3484	37	0.32	0.19	0.17	0.15	700	70-100	95	B3-U2-G3
35W32LED3K-T-LE2	3907	36	0.31	0.19	0.17	0.16	350	70-100	109	B1-U2-G1
35W32LED3K-T-LE3	3877	36	0.31	0.19	0.17	0.16	350	70-100	108	B1-U2-G1
35W32LED3K-T-LE4	3897	36	0.31	0.19	0.17	0.16	350	70-100	108	B1-U2-G1
35W32LED3K-T-LE5	3929	36	0.31	0.19	0.17	0.16	350	70-100	109	B3-U2-G3
55W32LED3K-T-LE2	5522	53	0.47	0.27	0.24	0.22	530	100-150	103	B1-U3-G1
55W32LED3K-T-LE3	5480	53	0.47	0.27	0.24	0.22	530	100-150	103	B1-U3-G2
55W32LED3K-T-LE4	5508	53	0.47	0.27	0.24	0.22	530	100-150	103	B1-U3-G2
55W32LED3K-T-LE5	5567	53	0.47	0.27	0.24	0.22	530	100-150	104	B3-U3-G3

1 L70 = 100,000 hrs (at ambient temperature = 25°C).

2 System wattage or total luminaire wattage includes the LED module and the LED driver.

3 Note: These guidelines show typical replacements for the HID wattage ranges shown. Replacements should always be confirmed with a photometric layout.

Note: Due to rapid and continuous advances in LED technology, LED luminaire data is subject to change without notice and at the discretion of Philips.

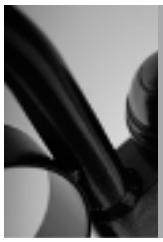

BRACKETS

TECHINAL INFORMATION

PHILIPS

LUMEC

DMS50
AC-M
> P108

DOS
DBC-M
*see domus small series brochure for **DBC** details*

DOS
DBC-1A
AM53V-12
*see domus small series brochure for **DBC** details*

DOS
AC-1A-TS
SM8N-16
> P108

DMS50
AC-1A
SM8N-20
> P108

DMS50-SMB
AC4-2
SSM8-28
> P122

DMS50-SMB
AC4-1A
SSM8V-28-MPL
DOS
AC-F-14-180deg
> P122/108

DMS50-SMB
AC6-1A
SSM8V-28-**PS-ACS**
> P122/137

DMS50-SMB
AC8-1A
SSM8V-28
> P122

Note: Philips Lumec reserves the right to modify the above details to reflect changes in the cost of materials and/or production and/or design without prior notice.

Note: Philips Lumec reserves the right to modify the above details to reflect changes in the cost of materials and/or production and/or design without prior notice.

S55C2
CRC-M
> P107

S55C2
CRC-1A
R80F-14
> P107

RNS20
AR-1A-RNA
R80F-16
> P106

RN20-SMA
AR4-1A
R80A-18-MPL
RNS20
AR-F-12-180deg-RNA
> P123/106

RN20-SMA
AR4-2
R92D-27
> P123

RN20-SMA
AR4-1A
R92D-27-**PSARS**
> P123/138

RN20-SMA
AR6-1A
R92D-27
> P123

RN20-SMA
AR8-1A
R92D-27
> P123

Note: Philips Lumec reserves the right to modify the above details to reflect changes in the cost of materials and/or production and/or design without prior notice.

Note: Philips Lumec reserves the right to modify the above details to reflect changes in the cost of materials and/or production and/or design without prior notice.

CTM
YC4-1A
ATR74V-28

> P124

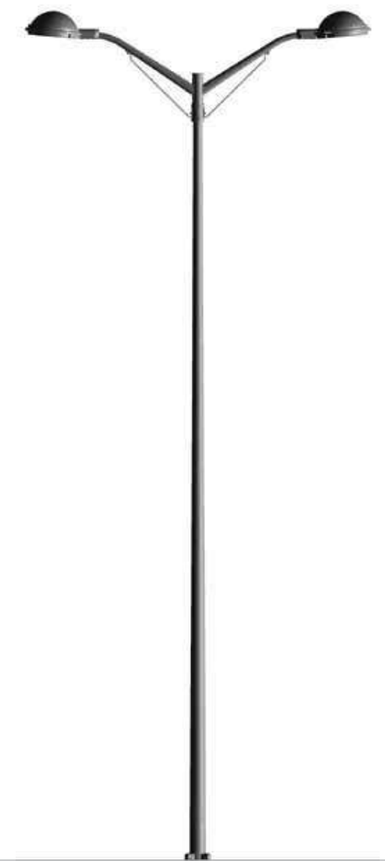

CTM
YC4-2
ATR74V-28

> P124

CTM
YC6-1A
ATR74V-28

> P124

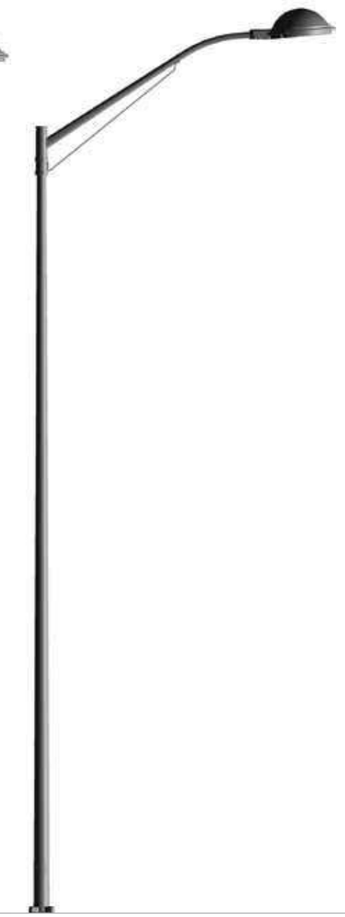

CTM
YC8-1A
ATR74V-28

> P124

Note: Philips Lumec reserves the right to modify the above details to reflect changes in the cost of materials and/or production and/or design without prior notice.

Note: Philips Lumec reserves the right to modify the above details to reflect changes in the cost of materials and/or production and/or design without prior notice.

RNS20
YR-M-RNA
> P106

S55C2
CRF-1A
R80A-14
> P106

RN20-SMA-GRD
YR4-2
RTA608N-28-**PSYRS**
> P125/138

RN20-SMA-GRD
YR4-1A
RTA608N-28-MPL
RNS20
YR-F-12-180deg-RNA
> P125/106

RN20-SMA-GRD
YR6-1A
RTA608N-28
> P125

RN20-SMA-GRD
YR8-1A
RTA608N-28
> P125

Note: Philips Lumec reserves the right to modify the above details to reflect changes in the cost of materials and/or production and/or design without prior notice.

Note: Philips Lumec reserves the right to modify the above details to reflect changes in the cost of materials and/or production and/or design without prior notice.

DMS50
VC-M
> P108

DOS
VC-M-TS
> P108

DOS
VC-1A-TS
AM6W-18
> P108

DMS50
VC-1A
AM6W-22-**PSVCS**
> P108/138

DMS50-SMB
VC4-1A
AMT8V-28-MPL
DOS
VC-F-15-180deg-TS
> P126/108

DMS50-SMB
VC4-2
AMT8V-28
> P126

DMS50-SMB
VC6-1A
AMT8V-28
> P126

DMS50-SMB
VC8-1A
AMT8V-28
> P126

Note: Philips Lumec reserves the right to modify the above details to reflect changes in the cost of materials and/or production and/or design without prior notice.

Note: Philips Lumec reserves the right to modify the above details to reflect changes in the cost of materials and/or production and/or design without prior notice.

L80
CRF-M
> P106

L80
CRF-1A
RA61F-12
> P106

RNS20
CRFT-1A-RNA
RA61F-16
> P107

RN20
CRFT-1A-RNA
RA61W-18
> P107

RN20-SMA
VR4-1A
RSS61V-28-MPL
RN520
CRFT-F-13-180deg-RNA
> P127/107

RN20-SMA
VR4-2
RSS61V-28-**PSCRFD**
> P127/138

RN20-SMA
VR6-1A
RSS61V-28-MPL
L80
CRF-F-13-180deg
> P127/106

RN20-SMA
VR8-1A
RSS61V-28
> P127

Note: Philips Lumec reserves the right to modify the above details to reflect changes in the cost of materials and/or production and/or design without prior notice.

Note: Philips Lumec reserves the right to modify the above details to reflect changes in the cost of materials and/or production and/or design without prior notice.

DMS50
PC-M
> P110

DOS
PC-M-TS
> P110

DOS
DBG-1A
AM53F-12

DMS50
PC-1A
AM8W-20
> P110

DOS
PC-1A-TS
AM8W-16
> P110

DMS50-SMB
PC4-2
SSM8V-25
> P128

DMS50-SMB
PC4-1A
SSM8V-25
+
DOS
PC-F-12-180deg-TS
> P128/110

DMS50-SMB
PC6-1A
SSM8V-25
+
PS-PCS
> P128/137

DMS50-SMB
PC6-1A
SSM8V-25
> P128

Note: Philips Lumec reserves the right to modify the above details to reflect changes in the cost of materials and/or production and/or design without prior notice.

Note: Philips Lumec reserves the right to modify the above details to reflect changes in the cost of materials and/or production and/or design without prior notice.

RNS20
CRAT-M-RNA
> P107

S55C2
CRA-1A
R80A-16
> P107

RN20
CRAT-1A-RNA
R80A-20-**PSCRAS**
> P107/137

RN20-SMA
PR4-2
RTA20V-27
> P129

RN20-SMA
PR4-1A
RTA20V-27-MPL
RNS20
CRAT-F-13-180deg-RNA
> P129/107

RN20-SMA
PR6-1A
RTA20V-27
> P129

RN20-SMA
PR8-1A
RTA20V-27
> P129

Note: Philips Lumec reserves the right to modify the above details to reflect changes in the cost of materials and/or production and/or design without prior notice.

Note: Philips Lumec reserves the right to modify the above details to reflect changes in the cost of materials and/or production and/or design without prior notice.

RN20-SMA
DR6-1A
R92D-27

> P121

RN20-SMA
DR6-2
R92D-27

> P121

DMS50-SMB
DC6-1A
SSM8V-25

> P121

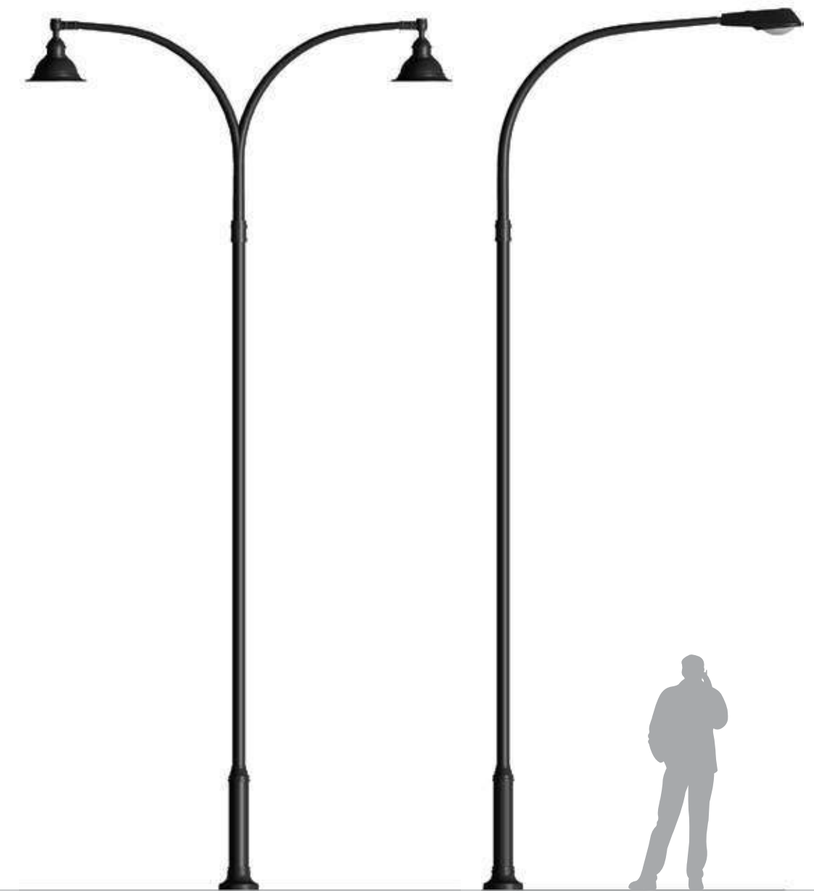

DMS50-SMB
DC6-2
SSM8V-25

> P121

HBM
DC8-1A
SSM8V-25

> P121

Note: Philips Lumec reserves the right to modify the above details to reflect changes in the cost of materials and/or production and/or design without prior notice.

Note: Philips Lumec reserves the right to modify the above details to reflect changes in the cost of materials and/or production and/or design without prior notice.

BRACKET INDEX > CONTEMPORARY AND TRADITIONAL BRACKETS

> CAST BRACKETS

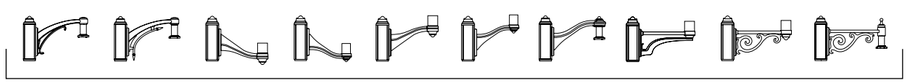

YR P106 | AR P106 | CRD P106 | CRDS P108 | CRF P106 | CRFS P108 | CRFT P107 | CRC P107 | CRA P107 | CRAT P107

> SHORT & MEDIUM REACH BRACKETS

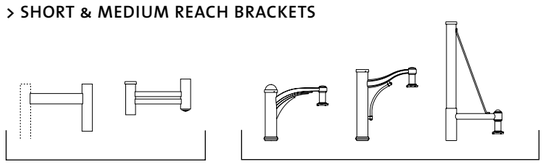

CR P109 | JR P109 | AC P108 | VC P108 | PC P110

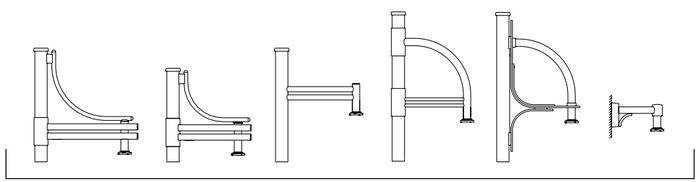

CN1 P110 | CN1S P110 | OM P110 | PM P111 | CN3 P111 | CNB-M P111

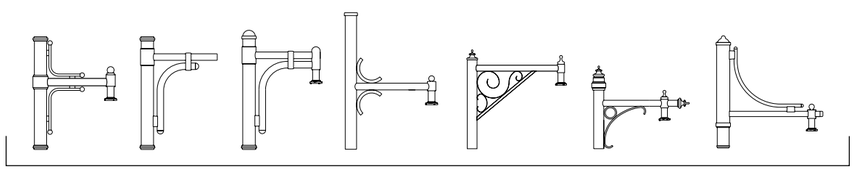

MM P112 | MR P112 | MT P112 | UM P112 | CRG P113 | CRH P113 | CRI P113

> GOOSE NECK BRACKETS

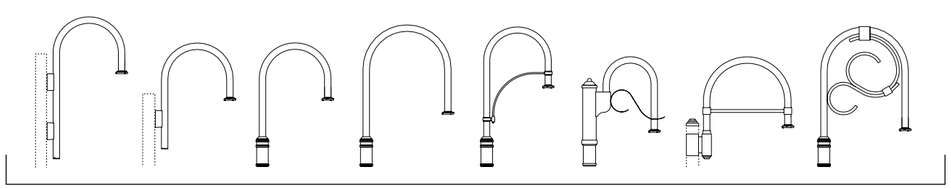

CN5 P114 | IF P114 | SM P114 | MJ P114 | BM P115 | LM P115 | TM P115 | NM P115

Note: Philips Lumec reserves the right to modify the above details to reflect changes in the cost of materials and/or production and/or design without prior notice.

> CLAMP-ON BRACKETS

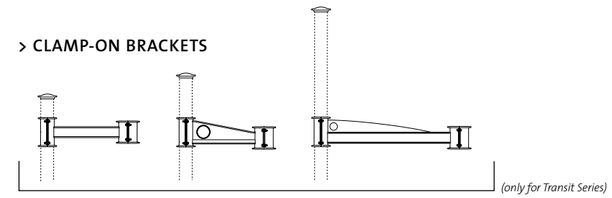

SN P118 | TN P118 | UN P118

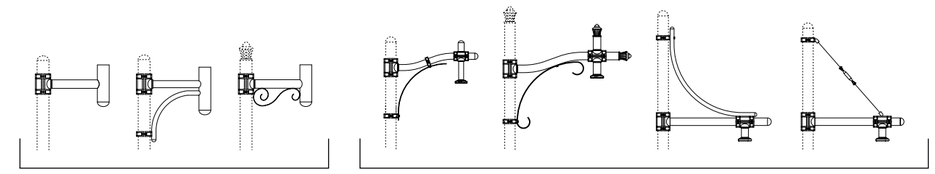

M10 P116 | M30 P116 | M50 P116 | M20H P117 | M20A P117 | M20G P117 | M20M P117

> EXTENDED REACH BRACKETS

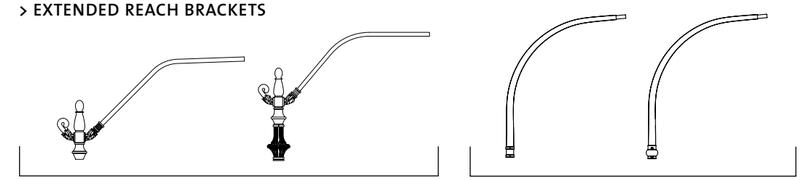

CRM4/CRM6/CRM8 P120 | CJL4/CJL5.5/CJL6/CJL8 P119 | DC6/DC8 P121 | DR6/DR8 P121

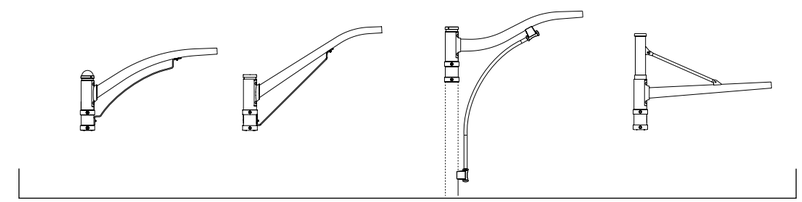

AC4/AC6/AC8 P122 | YC4/YC6/YC8 P124 | VC4/VC6/VC8 P126 | PC4/PC6/PC8 P128

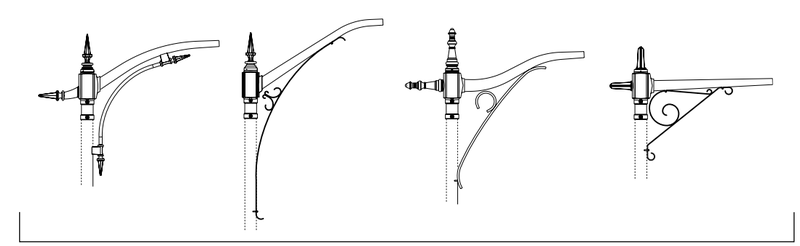

AR4/AR6/AR8 P123 | YR4/YR6/YR8 P125 | VR4/VR6/VR8 P127 | PR4/PR6/PR8 P129

Note: Philips Lumec reserves the right to modify the above details to reflect changes in the cost of materials and/or production and/or design without prior notice.

BRACKET INDEX > CONTEMPORARY AND TRADITIONAL BRACKETS

> CAST BRACKETS

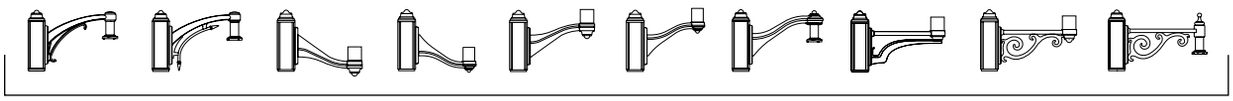

YR	AR	CRD	CRDS	CRF	CRFS	CRFT	CRC	CRA	CRAT
P106	P106	P106	P108	P106	P108	P107	P107	P107	P107

> SHORT & MEDIUM REACH BRACKETS

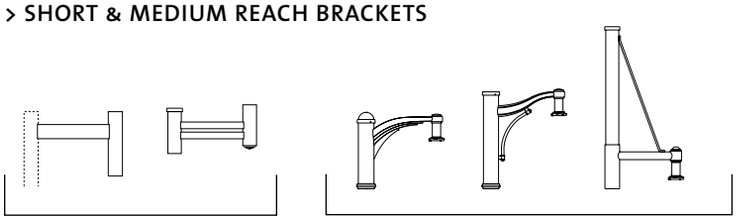

CR	JR	AC	VC	PC
P109	P109	P108	P108	P110

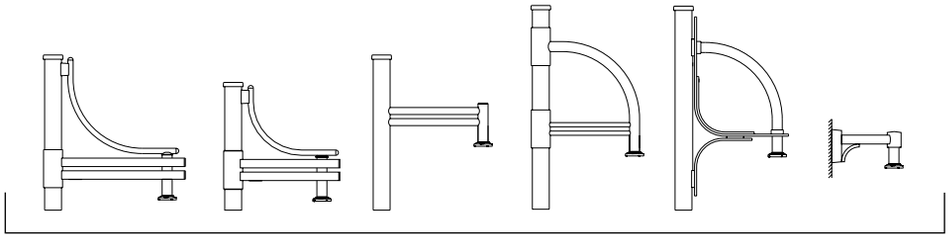

CN1	CN1S	OM	PM	CN3	CNB-M
P110	P110	P110	P111	P111	P111

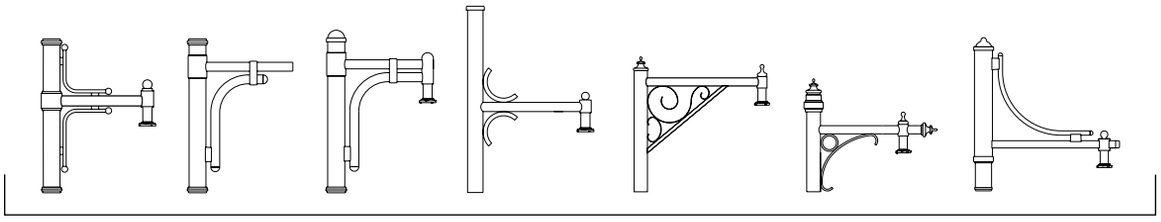

MM	MR	MT	UM	CRG	CRH	CRI
P112	P112	P112	P112	P113	P113	P113

> GOOSE NECK BRACKETS

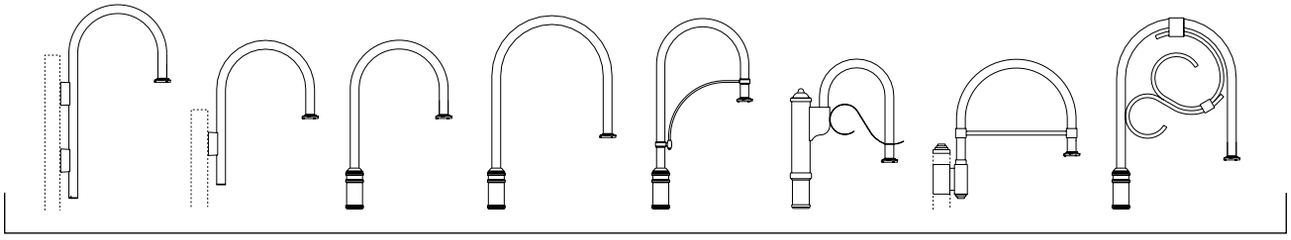

CN5	IF	SM	MJ	BM	LM	TM	NM
P114	P114	P114	P114	P115	P115	P115	P115

Note: Philips Lumec reserves the right to modify the above details to reflect changes in the cost of materials and/or production and/or design without prior notice.

> CLAMP-ON BRACKETS

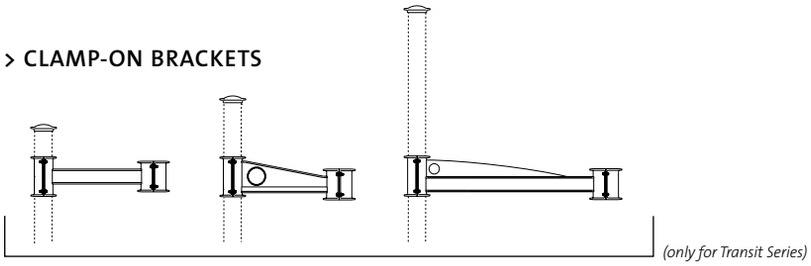

(only for Transit Series)

SN
P**118**

TN
P**118**

UN
P**118**

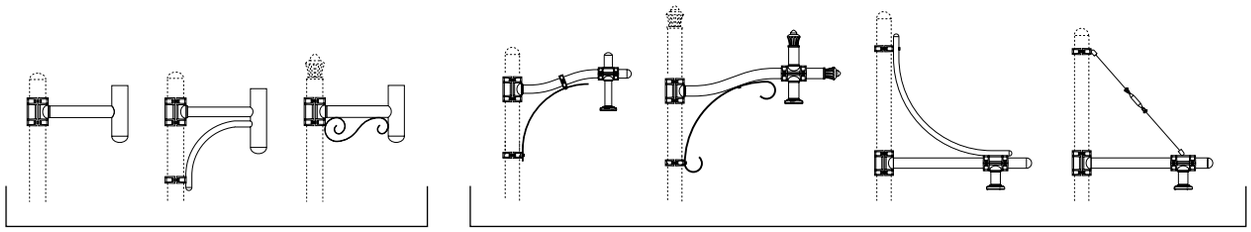

M10
P**116**

M30
P**116**

M50
P**116**

M20H
P**117**

M20A
P**117**

M20G
P**117**

M20M
P**117**

> EXTENDED REACH BRACKETS

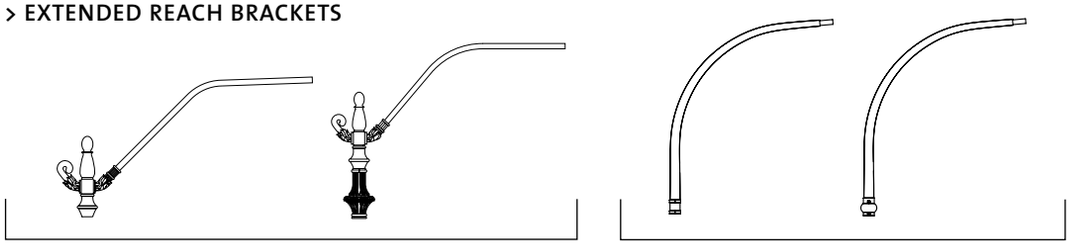

CRM4/CRM6/CRM8
P**120**

CJL4/CJL5.5/CJL6/CJL8
P**119**

DC6/DC8
P**121**

DR6/DR8
P**121**

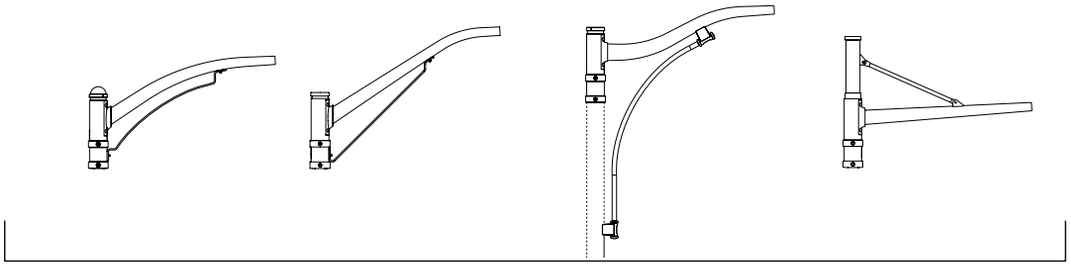

AC4/AC6/AC8
P**122**

YC4/YC6/YC8
P**124**

VC4/VC6/VC8
P**126**

PC4/PC6/PC8
P**128**

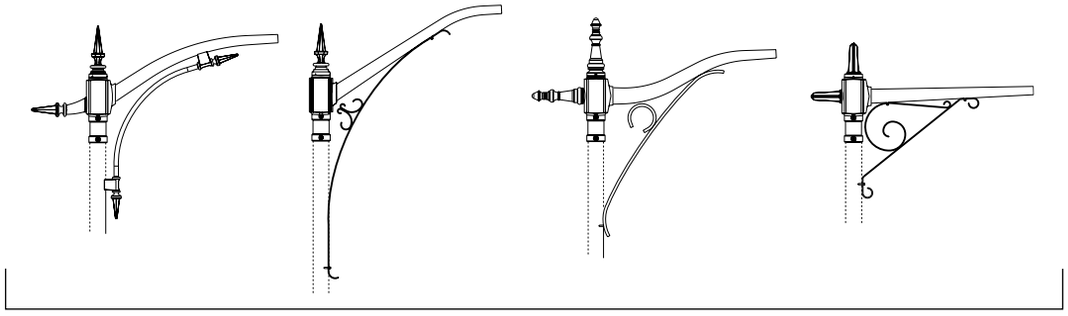

AR4/AR6/AR8
P**123**

YR4/YR6/YR8
P**125**

VR4/VR6/VR8
P**127**

PR4/PR6/PR8
P**129**

Note: Philips Lumec reserves the right to modify the above details to reflect changes in the cost of materials and/or production and/or design without prior notice.

PHILIPS LUMEC

YR / AR / CRD / CRF > CAST BRACKETS

YR

EPA: 1.30 sq.ft. **Weight:** 40.0 lbs. (18.1 kg)

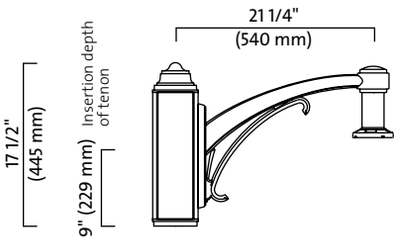

AR

EPA: 1.35 sq.ft. **Weight:** 40.0 lbs. (18.1 kg)

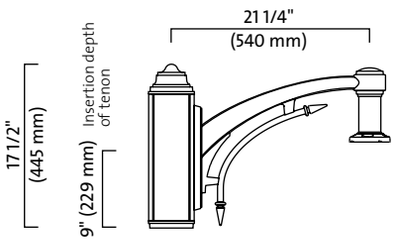

Specifications:

The **YR / AR** mounting arms feature a cast-aluminum curved arm and a decorative element welded to a cast-aluminum plate.

The luminaire adaptor will accept a luminaire equipped with Lumec's four-bolt mounting system.

The **YR / AR** plates are mechanically fastened using stainless steel hardware to a central pole adaptor slip-fitting 9" (229 mm) over a 4" (102 mm) O.D. pole or tenon.

Configurations

1A 2 2A 3B 4 M

Mid-pole Configurations
> with pole option MPL

F F 2F

CRD

EPA: 1.34 sq.ft. **Weight:** 25.0 lbs. (11.3 kg)

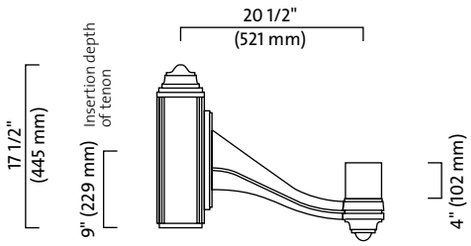

CRF

EPA: 1.34 sq.ft. **Weight:** 25.0 lbs. (11.3 kg)

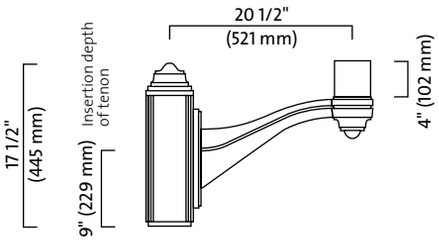

Specifications:

The **CRD / CRF** mounting arms feature a cast-aluminum curved arm mechanically assembled to a cast-aluminum plate.

The mounting arms are equipped with a 4" round (102 mm) by 4" high (102 mm) tenon for luminaire mounting.

The **CRD / CRF** plates are mechanically fastened by stainless steel hardware to a central pole adaptor slip-fitting 9" (229 mm) over a 4" (102 mm) O.D. pole or tenon.

Configurations

1A 2 2A 3A 3B 4 4A 5 M

Mid-pole Configurations
> with pole option MPL

F F 2F

Note: Philips Lumec reserves the right to modify the above details to reflect changes in the cost of materials and/or production and/or design without prior notice.

CRA

EPA: 1.40 sq.ft. **Weight:** 16.0 lbs. (7.3 kg)

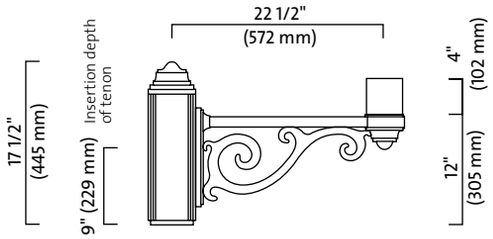

Specifications:

The **CRA** mounting arm features a seamless 1" x 2" (25 x 51 mm) rectangular extruded aluminum tube and cast decorative scroll, welded to a cast-aluminum plate.

The mounting arm is equipped with a 4" round (102 mm) by 4" high (102 mm) tenon for luminaire mounting.

The **CRA** plate is mechanically fastened using stainless steel hardware to a central pole adaptor slip-fitting 9" (229 mm) over a 4" (102 mm) O.D. pole or tenon.

Configurations

1A 2 2A 3A 3B 4 4A 5 M

Mid-pole Configurations
> with pole option MPL

F F 2F

CRAT

EPA: 1.45 sq.ft. **Weight:** 37.0 lbs. (16.8 kg)

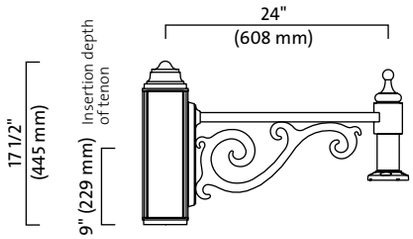

Specifications:

The **CRAT** mounting arm features a seamless 1" x 2" (25 x 51 mm) rectangular extruded aluminum tube and cast decorative scroll, welded to a cast-aluminum plate.

The luminaire adaptor will accept a luminaire equipped with Lumec's four-bolt mounting system.

The **CRAT** plate is mechanically fastened using stainless steel hardware to a central pole adaptor slip-fitting 9" (229 mm) over a 4" (102 mm) O.D. pole or tenon.

Configurations

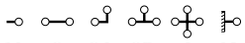

1A 2 2A 3B 4 M

Mid-pole Configurations
> with pole option MPL

F F 2F

CRC

EPA: 1.39 sq.ft. **Weight:** 17.0 lbs. (7.7 kg)

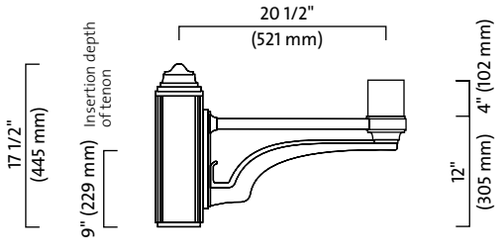

Specifications:

The **CRC** mounting arm features a seamless 1" x 2" (25 x 51 mm) rectangular extruded aluminum tube and cast decorative scroll, welded to a cast-aluminum plate.

The mounting arm is equipped with a 4" round (102 mm) by 4" high (102 mm) tenon for luminaire mounting.

The **CRC** plate is mechanically fastened using stainless steel hardware to a central pole adaptor slip-fitting 9" (229 mm) over a 4" (102 mm) O.D. pole or tenon.

Configurations

1A 2 2A 3A 3B 4 4A 5 M

Mid-pole Configurations
> with pole option MPL

F F 2F

CRFT

EPA: 1.32 sq.ft. **Weight:** 21.0 lbs. (9.5 kg)

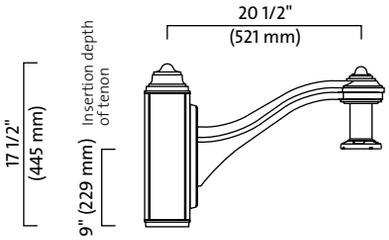

Specifications:

The **CRFT** mounting arm features a cast-aluminum curved arm mechanically assembled to a cast-aluminum plate.

The luminaire adaptor will accept a luminaire equipped with Lumec's four-bolt mounting system.

The **CRFT** plate is mechanically fastened using stainless steel hardware to a central pole adaptor slip-fitting 9" (229 mm) over a 4" (102 mm) O.D. pole or tenon.

Configurations

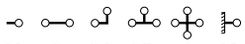

1A 2 2A 3B 4 M

Mid-pole Configurations
> with pole option MPL

F F 2F

Note: Philips Lumec reserves the right to modify the above details to reflect changes in the cost of materials and/or production and/or design without prior notice.

CRDS / CRFS / AC / VC > CAST BRACKETS AND SHORT REACH BRACKETS

CRDS

EPA: 1.13 sq.ft. **Weight:** 19.0 lbs. (8.6 kg)

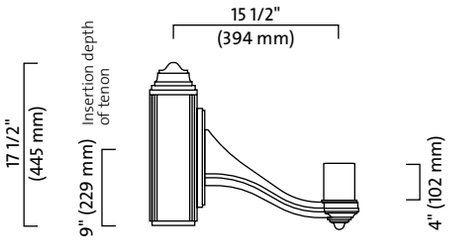

CRFS

EPA: 1.12 sq.ft. **Weight:** 19.0 lbs. (8.6 kg)

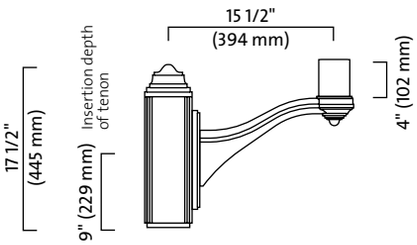

Specifications:

The **CRDS / CRFS** mounting arms feature a cast-aluminum curved arm mechanically assembled to a cast-aluminum plate.

The mounting arms are equipped with a 3" round (76 mm) by 3" high (76 mm) tenon for luminaire mounting.

The **CRDS / CRFS** plates are mechanically fastened by stainless steel hardware to a central pole adaptor slip-fitting 9" (229 mm) over a 4" (102 mm) O.D. pole or tenon.

Configurations

1A 2 2A 3A 3B 4 4A 5 M

Mid-pole Configurations
> with pole option MPL

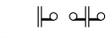

F F 2F

AC

EPA: 1.45 sq.ft. **Weight:** 15.0 lbs. (6.8 kg)

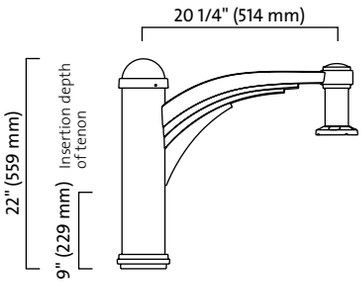

Specifications:

The **AC** mounting arm features a cast-aluminum curved arm, welded to the central pole adaptor.

The luminaire adaptor will accept a luminaire equipped with Lumec's four-bolt mounting system.

The central pole adaptor slip-fits 9" (229 mm) over a 4" (102 mm), 5" (127 mm) or 5 9/16" (141 mm) O.D. pole or tenon.

Configurations

1A 2 M

Mid-pole Configurations
> with pole option MPL

F F 2F

VC

EPA: 1.65 sq.ft. **Weight:** 16.0 lbs. (7.3 kg)

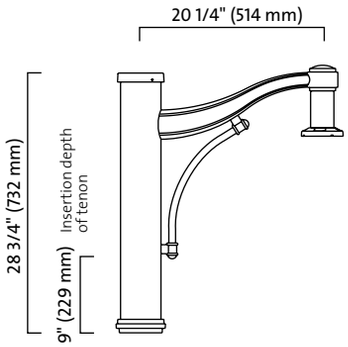

Specifications:

The **VC** mounting arm features a cast-aluminum curved arm welded to the central pole adaptor..

The mounting arm includes an extruded-aluminum decorative curved tubing welded to the side of the central pole adaptor and to the arm.

The luminaire adaptor will accept a luminaire equipped with Lumec's four-bolt mounting system.

The central pole adaptor slip-fits 9" (229 mm) over a 4" (102 mm), 5" (127 mm) or 5 9/16" (141 mm) O.D. pole or tenon.

Configurations

1A 2 M

Mid-pole Configurations
> with pole option MPL

F F 2F

Note: Philips Lumec reserves the right to modify the above details to reflect changes in the cost of materials and/or production and/or design without prior notice.

CR

EPA: 1.11 sq.ft. **Weight:** 12.0 lbs. (5.4 kg)

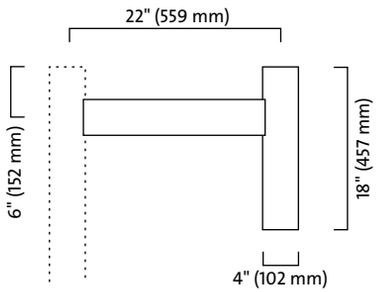

Specifications:

The **CR** mounting arm features a seamless 2" by 4" (51 by 102 mm) rectangular aluminum extrusion, mechanically assembled on both sides to the pole and to the luminaire adaptor.

The mounting arm includes a 4" (102 mm) O.D. extruded aluminum luminaire adaptor welded to the arm for luminaire mounting.

When specified with a central luminaire (configurations 3A, 4A, 4B and 5), a central pole adaptor serves to faciliate installation on site.

Configurations

1A 2 2A 3 3A 3B 4 4A 4B 5 M

JR

EPA: 1.51 sq.ft. **Weight:** 9.0 lbs. (4.1 kg)

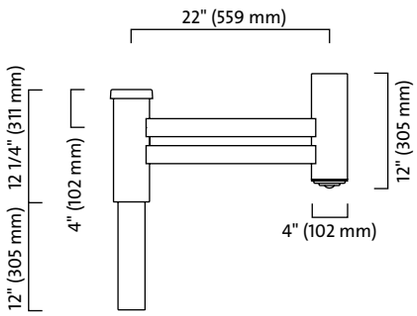

Specifications:

The **JR** mounting arm features two seamless 2" by 3" (51 by 76 mm) rectangular aluminum extrusions, welded on both sides to the central pole adaptor and to the luminaire adaptor.

The mounting arm includes a 4" (102 mm) O.D. extruded aluminum luminaire adaptor welded to the arm for luminaire mounting.

> *For pole supplied by others, we strongly recommend the OV option.*

Configurations

1A 2 2A 3 3A 3B 4 4A 4B 5 M

Note: Philips Lumec reserves the right to modify the above details to reflect changes in the cost of materials and/or production and/or design without prior notice.

PC / CN1 / CN1S / OM > MEDIUM REACH BRACKETS

PC

EPA: 2.35 sq.ft. **Weight:** 20.0 lbs. (9.1 kg)

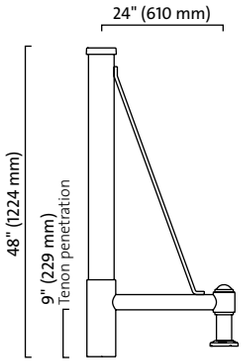

Specifications:

The **PC** mounting arm features a 2 3/8" (60 mm) round extruded-aluminum arm welded to the central pole adaptor.

The mounting arm includes an extruded-aluminum decorative rod welded to the central pole adaptor and to the arm.

The luminaire adaptor will accept a luminaire equipped with Lumec's four-bolt mounting system.

The aluminum central pole adaptor slip-fits 9" (229 mm) over a 4" (102 mm), 5" (127 mm) or 5 9/16" (141 mm) O.D. pole or tenon.

Configurations

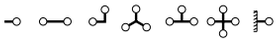

1A 2 2A 3 3B 4 M

Mid-pole Configurations

> with pole option MPL

F 2F

CN1

EPA: 2.62 sq.ft. **Weight:** 23.0 lbs. (10.4 kg)

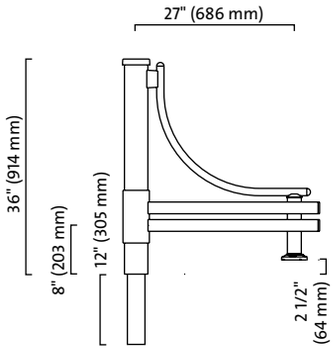

Specifications:

The **CN1** mounting arm features two 2" by 3" (51 x 76 mm) rectangular extruded-aluminum arms welded to the central pole adaptor.

The mounting arm includes a cast-aluminum decorative curved section welded to the central pole adaptor and the arm.

The luminaire adaptor will accept a luminaire equipped with Lumec's four-bolt mounting system.

The central pole adaptor slip-fits 12" (305 mm) into a 4" (102 mm), 5" (127 mm) or 5 9/16" (141 mm) O.D. pole or tenon.

> The CN1 is available with the OV option that can accommodate up to two 175W ballasts.
> For pole supplied by others, we strongly recommend the OV option.

Configurations

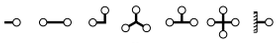

1A 2 2A 3 3B 4 M

CN1S

EPA: 2.58 sq.ft. **Weight:** 20.0 lbs. (9.1 kg)

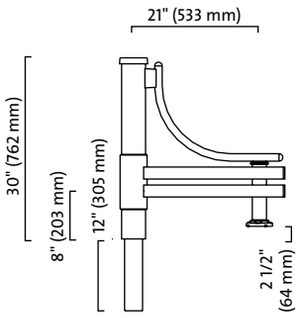

Specifications:

The **CN1S** mounting arm features two 2" by 3" (51 x 76 mm) rectangular extruded-aluminum arms welded to the central pole adaptor.

The mounting arm includes a cast-aluminum decorative curved section welded to the central pole adaptor and the arm.

The luminaire adaptor will accept a luminaire equipped with Lumec's four-bolt mounting system.

The central pole adaptor slip-fits 12" (305 mm) into a 4" (102 mm), 5" (127 mm) or 5 9/16" (141 mm) O.D. pole or tenon.

> The CN1S is available with the OV option that can accommodate up to one 175W ballasts.
> For pole supplied by others, we strongly recommend the OV option.

Configurations

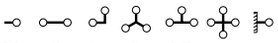

1A 2 2A 3 3B 4 M

OM

EPA: 1.84 sq.ft. **Weight:** 12.0 lbs. (5.4 kg)

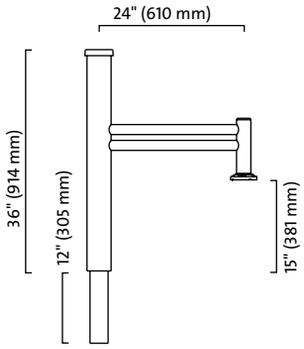

Specifications:

The **OM** mounting arm features two straight 1 5/8" O.D. (41 mm) arms welded to the central pole adaptor and an extruded-aluminum luminaire adaptor.

The luminaire adaptor will accept a luminaire equipped with Lumec's four-bolt mounting system.

The central pole adaptor slip-fits 12" (305 mm) into a 4" (102 mm), 5" (127 mm) or 5 9/16" (141 mm) O.D. pole or tenon.

> The OM is available with the OV option that can accommodate up to two 175W ballasts.
> For pole supplied by others, we strongly recommend the OV option.

Configurations

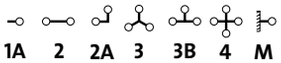

1A 2 2A 3 3B 4 M

Note: Philips Lumec reserves the right to modify the above details to reflect changes in the cost of materials and/or production and/or design without prior notice.

PM

EPA: 2.53 sq.ft. **Weight:** 18.0 lbs. (8.2 kg)

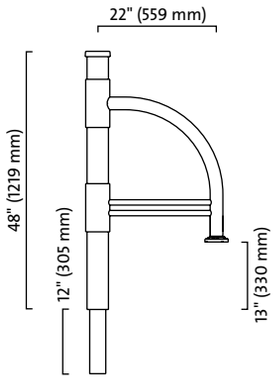

Specifications:

The **PM** mounting arm features a 2 3/8" O.D. (60 mm) extruded-aluminum tubing bent at a 90° angle and welded to two 1" (25 mm) extruded-aluminum arms, two decorative rings.

The luminaire adaptor will accept a luminaire equipped with Lumec's four-bolt mounting system.

The central pole adaptor slip-fits 12" (305 mm) into a 4" (102 mm), 5" (127 mm) or 5 9/16" (141 mm) O.D. pole or tenon.

> The PM is available with the OV option that can accommodate up to two 175W ballasts.
> For pole supplied by others, we strongly recommend the OV option.

Configurations

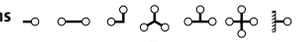

1A 2 2A 3 3B 4 M

CN3

EPA: 2.63 sq.ft. **Weight:** 26.0 lbs. (11.8 kg)

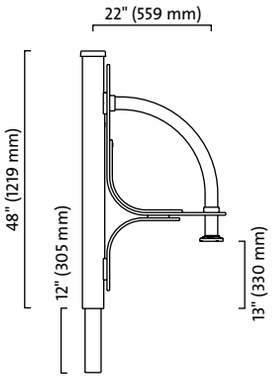

Specifications:

The **CN3** mounting arm features a 2 3/8" O.D. (60 mm) extruded-aluminum tubing bent at a 90° angle welded to the central pole adaptor and to a cast-aluminum curved decorative flat band arm.

The luminaire adaptor will accept a luminaire equipped with Lumec's four-bolt mounting system.

The central pole adaptor slip-fits 12" (305 mm) into a 4" (102 mm), 5" (127 mm) or 5 9/16" (141 mm) O.D. pole or tenon.

> The CN3 is available with the OV option that can accommodate up to two 175W ballasts.
> For pole supplied by others, we strongly recommend the OV option.

Configurations

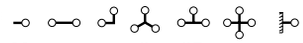

1A 2 2A 3 3B 4 M

CNB-M

EPA: 0.38 sq.ft. **Weight:** 5.0 lbs. (2.03 kg)

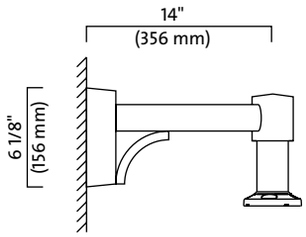

Specifications:

The **CRC** mounting arm features a 2" by 3" (51 by 76 mm) rectangular extruded-aluminum arm welded to a cast-aluminum wall-mounted housing.

The luminaire adaptor will accept a luminaire equipped with Lumec's four-bolt mounting system.

Configurations

M

Note: Philips Lumec reserves the right to modify the above details to reflect changes in the cost of materials and/or production and/or design without prior notice.

MM / MR / MT / UM > MEDIUM REACH BRACKETS

MM

EPA: 2.32 sq.ft. **Weight:** 22.0 lbs. (10.0 kg)

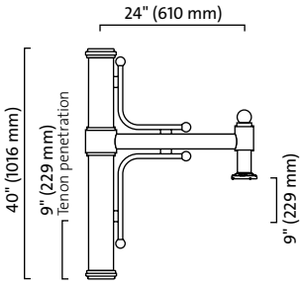

Specifications:

The **MM** mounting arm features a 2 3/8" round (60 mm) extruded-aluminum arm welded to an aluminum central pole adaptor.

The mounting arm includes two decorative cast-aliminum bent rods.

The luminaire adaptor will accept a luminaire equipped with Lumec's four-bolt mounting system.

The aluminum central pole adaptor slip-fits 9" (229 mm) over a 4" (102 mm), 5" (127 mm) or 5 9/16" (141 mm) O.D. pole or tenon.

Configurations

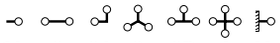

1A 2 2A 3 3B 4 M

MR

EPA: 2.10 sq.ft. **Weight:** 20.0 lbs. (9.1 kg)

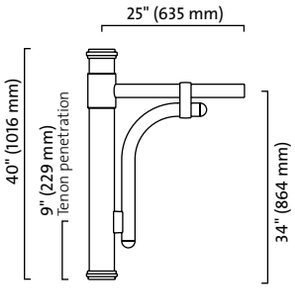

Specifications:

The **MR** mounting arm features a 2 3/8" round (60 mm) extruded-aluminum arm welded to an aluminum central pole adaptor.

The mounting includes a decorative bent extruded-aluminum tube welded to the central pole adaptor and to the arm.

The cast-aluminum central pole adaptor slip-fits 9" (229 mm) over a 4" (102 mm), 5" (127 mm) or 5 9/16" (141 mm) O.D. pole or tenon.

Configurations

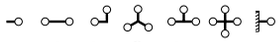

1A 2 2A 3 3B 4 M

MT

EPA: 2.20 sq.ft. **Weight:** 21.0 lbs. (9.5 kg)

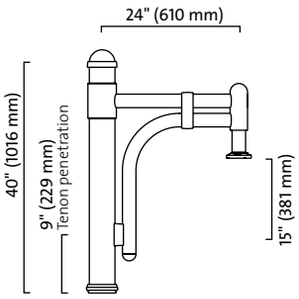

Specifications:

The **MT** mounting arm features a 2 3/8" round (60 mm) extruded-aluminum arm welded to an aluminum central pole adaptor.

The mounting arm includes a decorative bent extruded-aluminum tube welded to the central pole adaptor and to the luminaire adaptor.

The luminaire adaptor will accept a luminaire equipped with Lumec's four-bolt mounting system.

The aluminum central pole adaptor slip-fits 9" (229 mm) over a 4" (102 mm), 5" (127 mm) or 5 9/16" (141 mm) O.D. pole or tenon.

Configurations

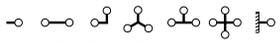

1A 2 2A 3 3B 4 M

UM

EPA: 2.33 sq.ft. **Weight:** 16.0 lbs. (7.3 kg)

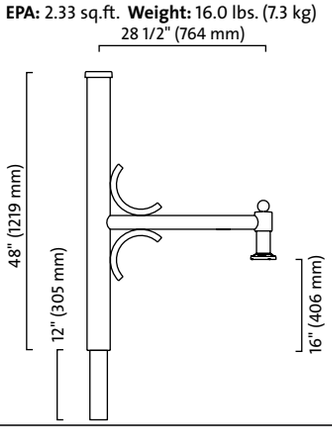

Specifications:

The **UM** mounting arm features a 2 3/8" round (60 mm) extruded-aluminum arm welded to an aluminum central pole adaptor.

The mounting arm includes two cast-aluminum decorative elements welded to the central pole adaptor and to the arm.

The luminaire adaptor will accept a luminaire equipped with Lumec's four-bolt mounting system.

The central pole adaptor slip-fits 12" (305 mm) into a 4" (102 mm), 5" (127 mm) or 5 9/16" (141 mm) O.D. pole or tenon.

> The UM is available with the OV option that can accommodate up to two 175W ballasts.
> For pole supplied by others, we strongly recommend the OV option.

Configurations

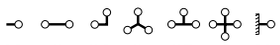

1A 2 2A 3 3B 4 M

Note: Philips Lumec reserves the right to modify the above details to reflect changes in the cost of materials and/or production and/or design without prior notice.

CRG

EPA: 2.29 sq.ft. **Weight:** 15.0 lbs. (6.8 kg)

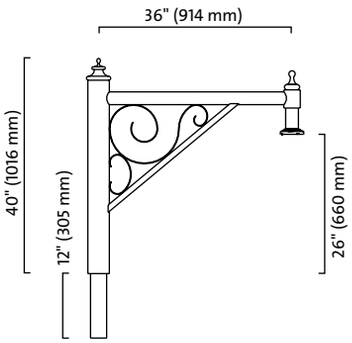

Specifications:

The **CRG** mounting arm features one 2 3/8" round (60 mm) extruded-aluminum arm welded to the central pole adaptor.

A 1 1/8" square (29 mm) extruded-aluminum tube is welded at an angle to the central pole adaptor and to the arm.

The mounting arm includes two decorative rolled sections of a flat aluminum band welded between the arm, central pole adaptor and angled tube.

The luminaire adaptor will accept a luminaire equipped with Lumec's four-bolt mounting system.

The central pole adaptor slip-fits 12" (305 mm) into a 4" (102 mm), 5" (127 mm) or 5 9/16" (141 mm) O.D. pole or tenon.

> The CRG is available with the OV option that can accommodate up to two 175W ballasts.
> For pole supplied by others, we strongly recommend the OV option.

Configurations

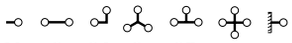

1A 2 2A 3 3B 4 M

CRH

EPA: 1.95 **sq.ft.** **Weight:** 24.0 **lbs.** (10.9 **kg**)

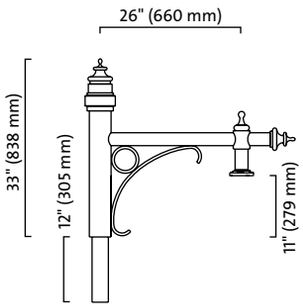

Specifications:

The **CRH** mounting arm features one 2 3/8" round (60 mm) extruded-aluminum arm welded to the central pole adaptor. Both are closed by a decorative cast-aluminum cover.

The mounting arm includes two decorative rolled sections of aluminum rods welded between the arm and the central pole adaptor.

The luminaire adaptor will accept a luminaire equipped with Lumec's four-bolt mounting system.

The central pole adaptor slip-fits 12" (305 mm) into a 4" (102 mm), 5" (127 mm) or 5 9/16" (141 mm) O.D. pole or tenon.

Configurations

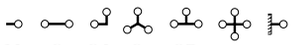

1A 2 2A 3 3B 4 M

CRI

CRI mounting can integrate up to 2 ballasts of 175W.
EPA: 2.68 sq.ft. **Weight:** 40.0 lbs. (18.1 kg)

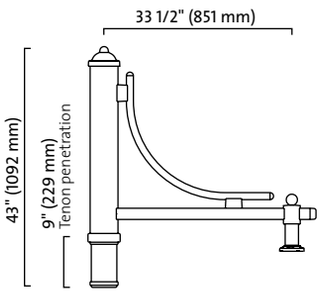

Specifications:

The **CRI** mounting arm features one 2" by 2" (51 x 51 mm) square extruded-aluminum arm welded to the central pole adaptor and closed by a cast-aluminum cover.

The mounting arm includes a 1 1/4" O.D. (32 mm) cast-aluminum decorative curved section welded to both the central pole adaptor and the arm.

The luminaire adaptor will accept a luminaire equipped with Lumec's four-bolt mounting system.

The aluminum central pole adaptor slip-fits 9" (229 mm) over a 4" (102 mm), 5" (127 mm) or 5 9/16" (141 mm) O.D. pole or tenon.

Configurations

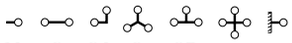

1A 2 2A 3 3B 4 M

Note: Philips Lumec reserves the right to modify the above details to reflect changes in the cost of materials and/or production and/or design without prior notice.

PHILIPS LUMEC

CN5

EPA: 1.81 sq.ft. **Weight:** 11.0 lbs. (5.0 kg)

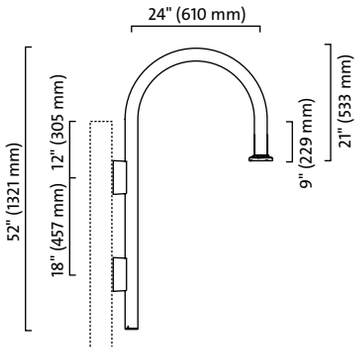

Specifications:

The **CN5** mounting arm features a 2 3/8"-O.D. (60 mm) extruded-aluminum tube bent at a 180° angle and mechanically assembled to the side of the pole using two cast-aluminum mounting arm adaptors.

The luminaire adaptor will accept a luminaire equipped with Lumec's four-bolt mounting system.

Configurations

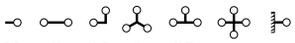

1A 2 2A 3 3B 4 M

IF

EPA: 1.41 sq.ft. **Weight:** 9.0 lbs. (4.0 kg)

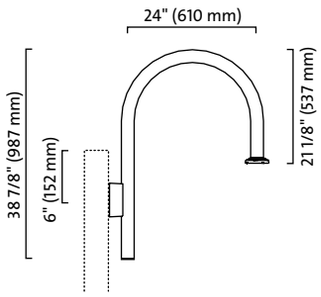

Specifications:

The **IF** mounting arm features a 2 3/8"-O.D. (60 mm) extruded-aluminum tube bent at a 180° angle and mechanically assembled to the pole using a cast-aluminum mounting adaptor.

The luminaire adaptor will accept a luminaire equipped with Lumec's four-bolt mounting system.

Configurations

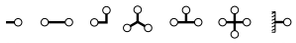

1A 2 2A 3 3B 4 M

SM

EPA: 1.37 sq.ft. **Weight:** 13.0 lbs. (5.9 kg)

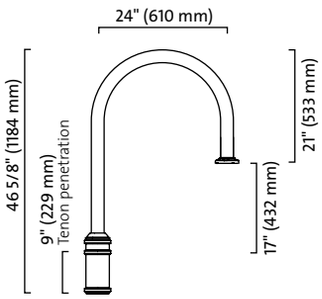

Specifications:

The **SM** mounting arm features a 2 3/8"-O.D. (60 mm) extruded-aluminum tube bent at a 180° angle welded to a cast-aluminum pole-top adaptor.

The luminaire adaptor will accept a luminaire equipped with Lumec's four-bolt mounting system.

The aluminum central pole adaptor slip-fits 9" (229 mm) over a 4" (102 mm), 5" (127 mm) or 5 9/16" (141 mm) O.D. pole or tenon.

Configurations

1A 2

MJ

EPA: 2.00 sq.ft. **Weight:** 13.0 lbs. (5.9 kg)

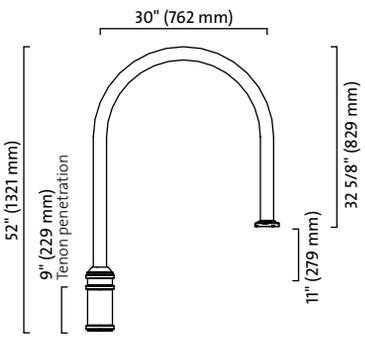

Specifications:

The **MJ** mounting arm features a 2 3/8"-O.D. (60 mm) extruded-aluminum tube bent at a 180° angle welded to a cast-aluminum pole-top adaptor.

The luminaire adaptor will accept a luminaire equipped with Lumec's four-bolt mounting system.

The aluminum central pole adaptor slip-fits 9" (229 mm) over a 4" (102 mm), 5" (127 mm) or 5 9/16" (141 mm) O.D. pole or tenon.

> The MJ bracket is offered with LG option (medaillon to accept logo) see page 134.

Configurations

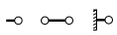

1A 2 M

Note: Philips Lumec reserves the right to modify the above details to reflect changes in the cost of materials and/or production and/or design without prior notice.

BM

EPA: 2.00 sq.ft. **Weight:** 40.0 lbs. (18.1 kg)

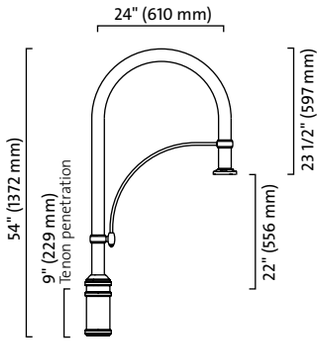

Specifications:

The **BM** mounting arm features a 2 3/8" O.D. (60 mm) extruded-aluminum tube bent at 180° welded to a cast-aluminum adaptor.

The mounting arm includes an aluminum decorative element welded to the arm.

The luminaire adaptor will accept a luminaire equipped with Lumec's four-bolt mounting system.

The aluminum central pole adaptor slip-fits 9" (229 mm) over a 4" (102 mm), 5" (127 mm) or 5 9/16" (141 mm) O.D. pole or tenon.

Configurations

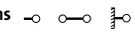

1A 2 M

LM

EPA: 2.59 sq.ft. **Weight:** 21.0 lbs. (9.5 kg)

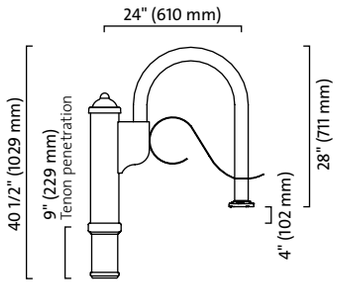

Specifications:

The **LM** mounting arm features a 2 3/8" O.D. (60 mm) extruded-aluminum tube bent at 180° welded to a cast-aluminum adaptor.

The mounting arm includes a flat rolled aluminum decorative element.

The luminaire adaptor will accept a luminaire equipped with Lumec's four-bolt mounting system.

The aluminum central pole adaptor slip-fits 9" (229 mm) over a 4" (102 mm), 5" (127 mm) or 5 9/16" (141 mm) O.D. pole or tenon.

Configurations

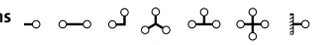

1A 2 2A 3 3B 4 M

TM

EPA: 2.27 sq.ft. **Weight:** 20.0 lbs. (9.1 kg)

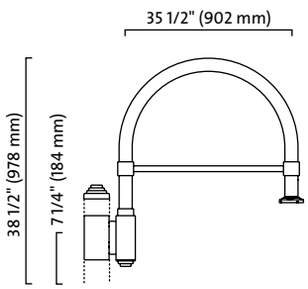

Specifications:

The **TM** mounting arm features a 2 3/8" O.D. (60 mm) extruded-aluminum tube bent at 180° and welded to a pole adaptor.

The mounting arm includes an extruded-aluminum 1 1/16" (27 mm) O.D. decorative element welded to the arm.

The luminaire adaptor will accept a luminaire equipped with Lumec's four-bolt mounting system.

The aluminum central pole adaptor slip-fits over a 4" (102 mm), 5" (127 mm) or 5 9/16" (141 mm) O.D. pole.

Configurations

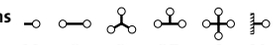

1A 2 3 3B 4 M

NM

EPA: 2.81 sq.ft. **Weight:** 27 lbs. (12.3 kg)

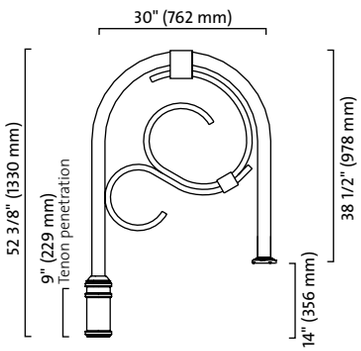

Specifications:

The **NM** mounting arm features a 2 3/8" O.D. (60 mm) extruded-aluminum tube bent at 180°, welded to a cast-aluminum pole adaptor.

The mounting arm includes a cast-aluminum decorative spiral element welded to the arm.

The luminaire adaptor will accept a luminaire equipped with Lumec's four-bolt mounting system.

The aluminum central pole adaptor slip-fits 9" (229 mm) over a 4" (102 mm), 5" (127 mm) or 5 9/16" (141 mm) O.D. pole or tenon.

Configurations

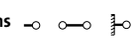

1A 2 M

Note: Philips Lumec reserves the right to modify the above details to reflect changes in the cost of materials and/or production and/or design without prior notice.

PHILIPS LUMEC

M10

EPA: 1.03 sq.ft. **Weight:** 9.0 lbs. (4.1 kg)

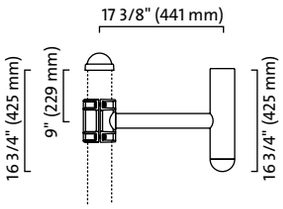

Specifications:

The **M10** mounting arm features a 2 3/8" round (60 mm), extruded-aluminum tube, welded to a cast-aluminum clamp-on pole adaptor. Comes with a standard decorative pole cap.

The mounting arm includes a 4" (102 mm) O.D. extruded aluminum luminaire adaptor welded to the arm for luminaire mounting.

The mounting arm clamp is mechanically assembled on a 4" (102 mm), 5" (127 mm) or 5 9/16" (141 mm) pole using stainless steel hardware. The location is pre-drilled on Lumec poles.

Configurations **1A** **2** **M**

Optional Pole Caps **CAP1** **CAP3** **CAP4**

M30

EPA: 1.56 sq.ft. **Weight:** 12.0 lbs. (5.4 kg)

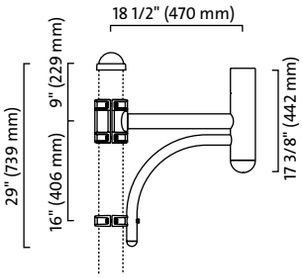

Specifications:

The **M30** mounting arm features a 2 3/8" round (60 mm), extruded-aluminum tube, welded to a cast-aluminum clamp-on pole adaptor. Comes with a standard decorative pole cap.

The mounting arm includes a decorative curved 1.66" round (42 mm) extruded bent aluminum piece is mechanically secured to the pole using a clamp and welded to the luminaire adaptor.

The mounting arm includes a 4" (102 mm) O.D. extruded aluminum luminaire adaptor welded to the arm for luminaire mounting.

The mounting arm clamp is mechanically assembled on a 4" (102 mm), 5" (127 mm) or 5 9/16" (141 mm) pole using stainless steel hardware. The location is pre-drilled on Lumec poles.

Configurations **1A** **2** **M**

Optional Pole Caps **CAP1** **CAP3** **CAP4**

M50

EPA: 1.19 sq.ft. **Weight:** 14.0 lbs. (6.4 kg)

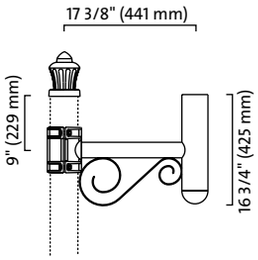

Specifications:

The **M50** mounting arm features a 2 3/8" round (60 mm), extruded-aluminum tube, welded to a cast-aluminum clamp-on pole adaptor. Comes with a standard decorative pole cap.

The mounting arm includes a decorative rolled flat aluminum decorative element, welded to the arm, luminaire adaptor and pole adaptor.

The mounting arm includes a 4" (102 mm) O.D. extruded aluminum luminaire adaptor welded to the arm for luminaire mounting.

The mounting arm clamp is mechanically assembled on a 4" (102 mm), 5" (127 mm) or 5 9/16" (141 mm) pole using stainless steel hardware. The location is pre-drilled on Lumec poles.

Configurations **1A** **2** **M**

Optional Pole Caps **CAP1** **CAP2** **CAP3**

Note: Philips Lumec reserves the right to modify the above details to reflect changes in the cost of materials and/or production and/or design without prior notice.

M20A

EPA: 2.06 sq.ft. **Weight:** 28.0 lbs. (12.7 kg)

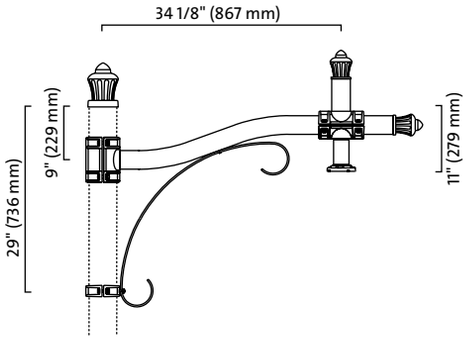

Specifications:

The **M20A** mounting arm features a 2 7/8" round (73 mm) double-bend extruded-aluminum tube, welded to a cast-aluminum clamp-on pole adaptor. Comes with a standard decorative pole cap.

The mounting arm includes a flat bent aluminum decorative element mechanically secured to the arm and pole.

A suspended luminaire adaptor is mechanically secured to the arm by a decorative cast-aluminum clamp and stainless steel hardware.

The luminaire adaptor will accept a luminaire equipped with Lumec's four-bolt mounting system.

The mounting arm clamp is mechanically assembled on a 4" (102 mm), 5" (127 mm) or 5 9/16" (141 mm) pole using stainless steel hardware. The location is pre-drilled on Lumec poles.

Configurations **1A** **2** **M**

Optional Pole Caps **CAP1** **CAP3**

M20G

EPA: 1.76 sq.ft. **Weight:** 18.0 lbs. (8.2 kg)

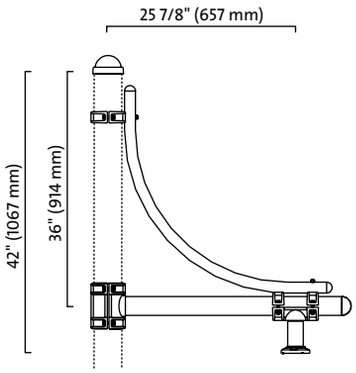

Specifications:

The **M20G** mounting arm features a 2 7/8" round (73 mm), straight extruded-aluminum tube, welded to a cast-aluminum clamp-on pole adaptor. Comes with a standard decorative pole cap.

The mounting arm includes a bent extruded-aluminum decorative element mechanically secured to the arm and pole.

A suspended luminaire adaptor is mechanically secured to the arm by a decorative cast-aluminum clamp and stainless steel hardware.

The luminaire adaptor will accept a luminaire equipped with Lumec's four-bolt mounting system.

The mounting arm clamp is mechanically assembled on a 4" (102 mm), 5" (127 mm) or 5 9/16" (141 mm) pole using stainless steel hardware. The location is pre-drilled on Lumec poles.

Configurations **1A** **2** **M**

Optional Pole Caps **CAP1** **CAP3** **CAP4**

M20H

EPA: 1.76 sq.ft. **Weight:** 19.0 lbs. (8.6 kg)

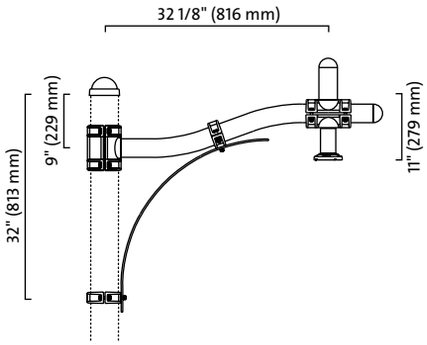

Specifications:

The **M20H** mounting arm features a 2 7/8" round (73 mm) double-bend extruded-aluminum tube, welded to a cast-aluminum clamp-on pole adaptor. Comes with a standard decorative pole cap

The mounting arm includes a flat bent aluminum decorative element mechanically secured to the arm and pole.

A suspended luminaire adaptor is mechanically secured to the arm by a decorative cast-aluminum clamp and stainless steel hardware.

The luminaire adaptor will accept a luminaire equipped with Lumec's four-bolt mounting system.

The mounting arm clamp is mechanically assembled on a 4" (102 mm), 5" (127 mm) or 5 9/16" (141 mm) pole using stainless steel hardware. The location is pre-drilled on Lumec poles.

Configurations **1A** **2** **M**

Optional Pole Caps **CAP1** **CAP2** **CAP3**

M20M

EPA: 1.34 sq.ft. **Weight:** 19.0 lbs. (8.6 kg)

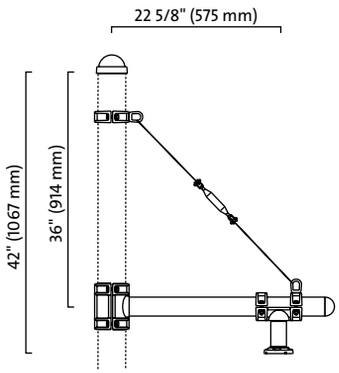

Specifications:

The **M20M** mounting arm features a 2 7/8" round (73 mm), straight extruded-aluminum tube, welded to a cast-aluminum clamp-on pole adaptor. Comes with a standard decorative pole cap.

The mounting arm includes a steel cable decorative element mechanically secured to the arm and pole.

A suspended luminaire adaptor is mechanically secured to the arm by a decorative cast-aluminum clamp and stainless steel hardware.

The luminaire adaptor will accept a luminaire equipped with Lumec's four-bolt mounting system.

The mounting arm clamp is mechanically assembled on a 4" (102 mm), 5" (127 mm) or 5 9/16" (141 mm) pole using stainless steel hardware. The location is pre-drilled on Lumec poles.

Configurations **1A** **2** **M**

Optional Pole Caps **CAP1** **CAP3** **CAP4**

Note: Philips Lumec reserves the right to modify the above details to reflect changes in the cost of materials and/or production and/or design without prior notice.

PHILIPS LUMEC

SN / TN / UN > CLAMP-ON BRACKETS *(only for Transit series)*

SN

EPA: 1.51 sq.ft. **Weight:** 16.0 lbs. (7.3 kg)

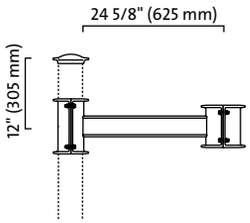

Specifications:

The **SN** mounting arm features an extruded-aluminum arm, welded to a cast-aluminum clamp-on pole adaptor and luminaire adaptor. Comes with a standard decorative pole cap.

The mounting arm clamp is mechanically assembled on a 4" (102 mm), 5" (127 mm) or 5 9/16" (141 mm) pole using stainless steel hardware. The location is pre-drilled on Lumec poles.

Configurations **1A** **2** **M**

Optional Pole Caps **CAP1** **CAP2**

TN

EPA: 1.87 sq.ft. **Weight:** 19.0 lbs. (8.6 kg)

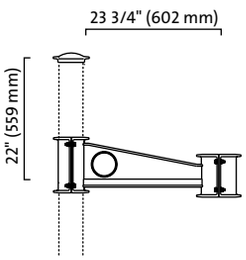

Specifications:

The **TN** mounting arm features a decorative cast-aluminum arm, with straight edge and a decorative hole,welded to a cast-aluminum clamp-on pole adaptor and luminaire adaptor. Comes with a standard decorative pole cap.

The mounting arm clamp is mechanically assembled on a 4" (102 mm), 5" (127 mm) or 5 9/16" (141 mm) pole using stainless steel hardware. The location is pre-drilled on Lumec poles.

Configurations **1A** **2** **M**

Optional Pole Caps **CAP1** **CAP2**

UN

EPA: 1.68 sq.ft. **Weight:** 17.0 lbs. (7.7 kg)

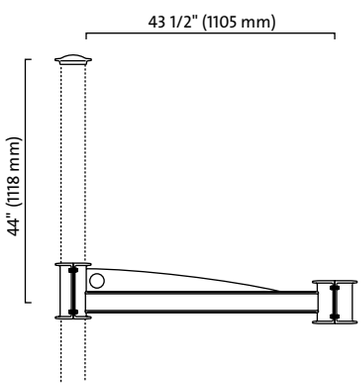

Specifications:

The **UN** mounting arm features an extruded-aluminum arm, welded to a cast-aluminum clamp-on pole adaptor and luminaire adaptor. Comes with a standard decorative pole cap.

The mounting arm includes a decorative aluminum piece, with a straigh edge on the bottom and a decorative hole that is mechanically secured to the arm and luminaire adaptor.

The mounting arm clamp is mechanically assembled on a 4" (102 mm), 5" (127 mm) or 5 9/16" (141 mm) pole using stainless steel hardware. The location is pre-drilled on Lumec poles.

Configurations **1A** **2** **M**

Optional Pole Caps **CAP1** **CAP2**

Note: Philips Lumec reserves the right to modify the above details to reflect changes in the cost of materials and/or production and/or design without prior notice.

CJL4

EPA: 4.10 sq.ft. **Weight:** 36.0 lbs. (16.3 kg)

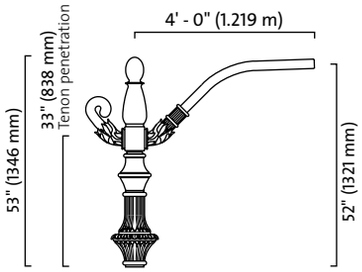

CJL5.5

EPA: 4.40 sq.ft. **Weight:** 41.0 lbs. (18.6 kg)

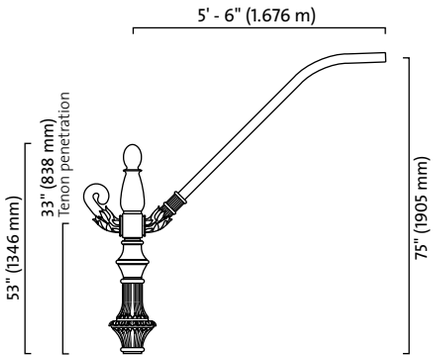

CJL6

EPA: 4.51 sq.ft. **Weight:** 43.0 lbs. (19.5 kg)

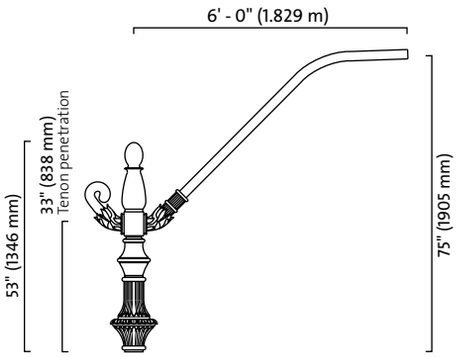

CJL8

EPA: 4.95 sq.ft. **Weight:** 50.0 lbs. (22.7 kg)

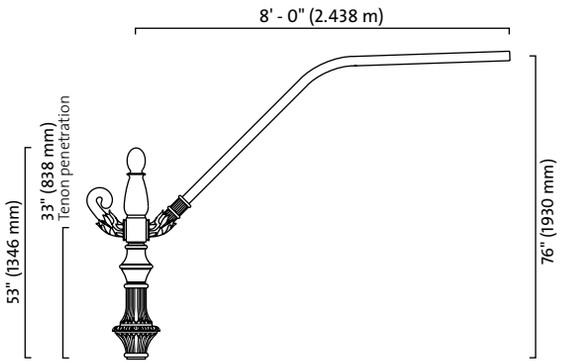

Specifications:

The **CJL4 / CJL5.5 / CJL6 / CJL8** mounting arms feature a 2 3/8" O.D. (60 mm) double bent steel tube welded to a steel adaptor.

The mounting arms assemblies include cast-aluminum decorative elements. The pole-top adaptor slip-fits over a two-step tenon 2 7/8" (73 mm) O.D. (top section) and 4" (120 mm) O.D. (bottom section), 30" (762 mm) tall.

Configurations

1A **2** **4**

CRM4 / CRM6 / CRM8 > EXTENDED REACH BRACKETS

CRM4

EPA: 3.00 sq.ft. **Weight:** 31.0 lbs. (14.1 kg)

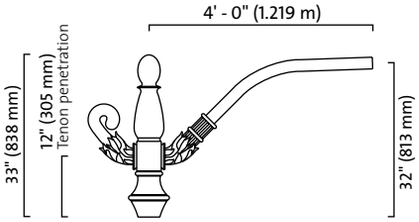

CRM6

EPA: 3.33 sq.ft. **Weight:** 37.0 lbs. (16.8 kg)

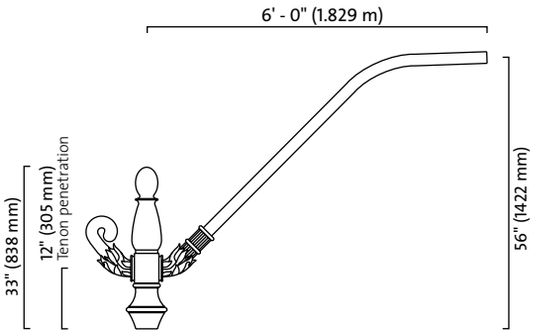

CRM8

EPA: 3.73 sq.ft. **Weight:** 42.0 lbs. (19.1 kg)

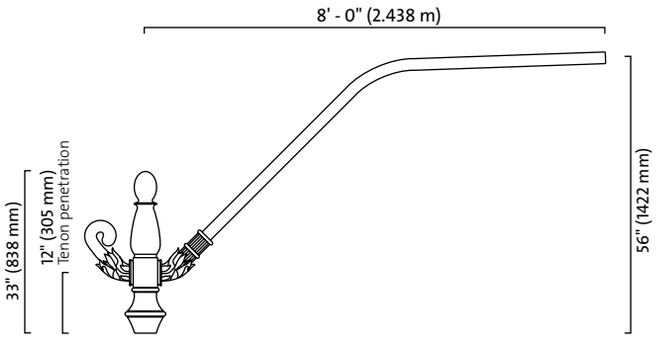

Specifications:

The **CRM4 / CRM6 / CRM8** mounting arms feature a 2 3/8" O.D. (60 mm) double-bend steel tube welded to a steel adaptor.

The mounting arms assemblies include cast-aluminum decorative elements. The pole-top adaptor slip-fits 10 3/8" (264 mm) over a 2 7/8" (73 mm) O.D. tenon.

Configurations

1A **2** **4**

Note: Philips Lumec reserves the right to modify the above details to reflect changes in the cost of materials and/or production and/or design without prior notice.

DC6

EPA: 4.07 sq.ft. **Weight:** 32.0 lbs. (14.5 kg)

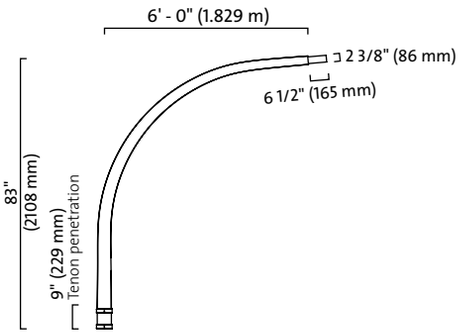

DC8

EPA: 5.00 sq.ft. **Weight:** 43.0 lbs. (19.5 kg)

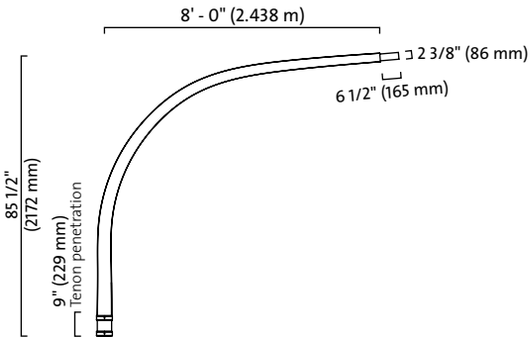

DR6

EPA: 4.07 sq.ft. **Weight:** 32.0 lbs. (14.5 kg)

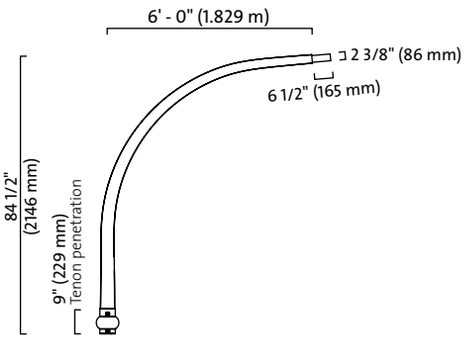

DR8

EPA: 5.00 sq.ft. **Weight:** 43.0 lbs. (19.5 kg)

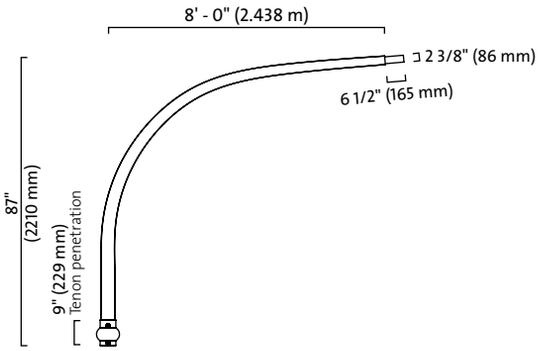

Specifications:

The **DC6 / DC8 / DR6 / DR8** mounting arms feature a round and smooth tapered aluminum bent arm welded to cast-aluminum pole adaptor.

The central pole adaptor slip-fits 9" (229 mm) over a 4" (102 mm), 5" (127 mm) or 5 9/16" (141 mm) O.D. pole or tenon.

Configurations

1A **2** **4**

AC4

EPA: 2.34 sq.ft. **Weight:** 20.0 lbs. (9.1 kg)

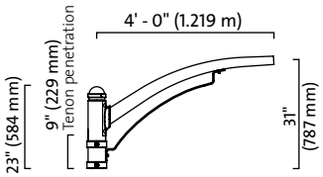

AC6

EPA: 3.06 sq.ft. **Weight:** 23.0 lbs. (10.4 kg)

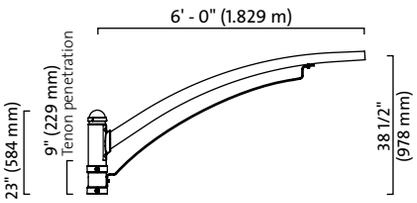

AC8

EPA: 3.77 sq.ft. **Weight:** 32.0 lbs. (14.5 kg)

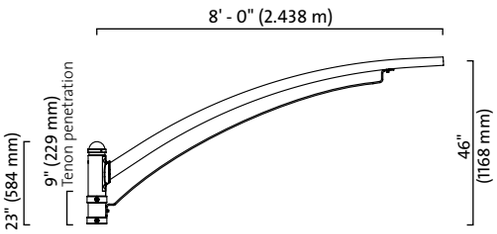

Specifications:

The **AC4 / AC6 / AC8** mounting arms feature a tapered spun aluminum arm of 4" by 2 7/8" (102 by 73 mm) to 2 3/8" (60 mm) O.D. at the luminaire end, mechanically assembled to the central housing.

The mounting arms include a decorative curved flat piece of aluminum, mechanically assembled to the central pole adaptor and to the arm using stainless steel hardware.

The central pole adaptor is complete with a cast-aluminum cap, slip-fits 9" (229 mm) over a 4" (102 mm), 5" (127 mm) or 5 9/16" (141 mm) O.D. pole or tenon.

Configurations

1A **2** **4**

Note: Philips Lumec reserves the right to modify the above details to reflect changes in the cost of materials and/or production and/or design without prior notice.

AR4

EPA: 3.63 sq.ft. **Weight:** 31.0 lbs. (14.1 kg)

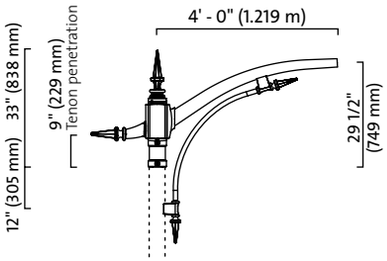

AR6

EPA: 4.49 sq.ft. **Weight:** 34.0 lbs. (15.4 kg)

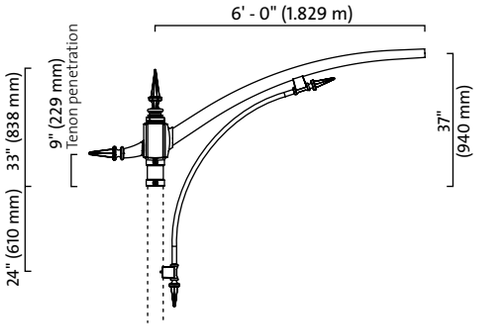

AR8

EPA: 5.36 sq.ft. **Weight:** 43.0 lbs. (19.5kg)

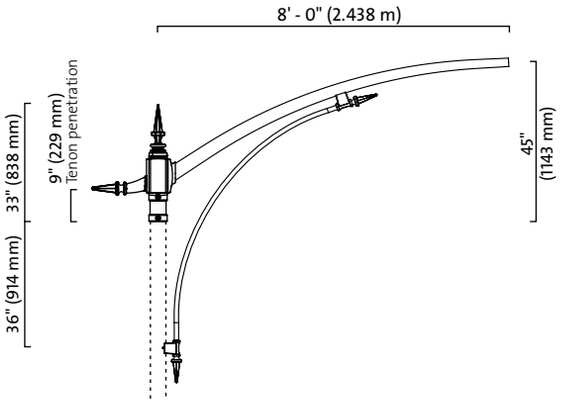

Specifications:

The **AR4 / AR6 / AR8** mounting arms a tapered spun aluminum arm of 4" by 2 7/8" (102 by 73 mm) to 2 3/8" (60 mm) O.D. at the luminaire end, mechanically assembled to the central housing.

The mounting arms include a decorative bent piece of aluminum, mechanically assembled to the pole and to the arm using stainless steel hardware, complete with a decorative cast aluminum cap on each end.

The central pole adaptor is complete with a decorative cast-aluminum cap. With the IA configurationa cast-aluminumdecorative side cap is added. The central pole adaptor slip-fits 9" (229 mm) over a 4" (102 mm), 5" (127 mm) or 5 9/16" (141 mm) O.D. pole or tenon.

Configurations

1A **2** **4**

YC4

EPA: 2.36 sq.ft. **Weight:** 25.0 lbs. (11.3 kg)

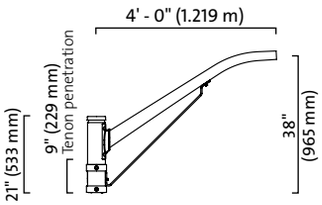

YC6

EPA: 3.10 sq.ft. **Weight:** 30.0 lbs. (13.6 kg)

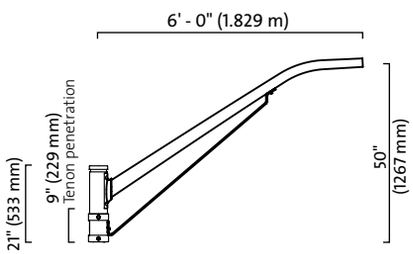

YC8

EPA: 3.76 sq.ft. **Weight:** 38.0 lbs. (17.2 kg)

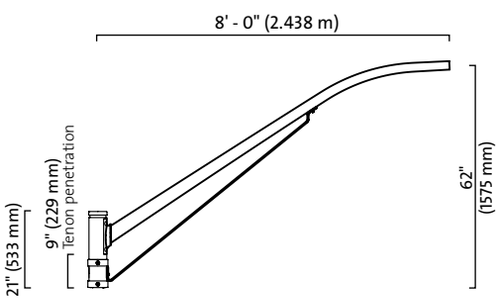

Specifications:

The **YC4 / YC6 / YC8** mounting arms feature a tapered spun aluminum arm of 4" by 2 7/8" (102 by 73 mm) to 2 3/8" (60 mm) O.D. at the luminaire end, mechanically assembled to the central housing.

The mounting arms include a decorative bent piece of aluminum, mechanically assembled to the central pole adaptor and to the arm using stainless steel hardware.

The central pole adaptor is complete with a cast-aluminum cap, slip-fits 9" (229 mm) over a 4" (102 mm), 5" (127 mm) or 5 9/16" (141 mm) O.D. pole or tenon.

Configurations

1A **2** **4**

Note: Philips Lumec reserves the right to modify the above details to reflect changes in the cost of materials and/or production and/or design without prior notice.

YR4

EPA: 2.69 sq.ft. **Weight:** 29.0 lbs. (13.2 kg)

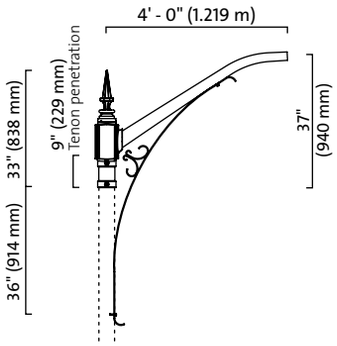

YR6

EPA: 3.43 sq.ft. **Weight:** 34.0 lbs. (15.4 kg)

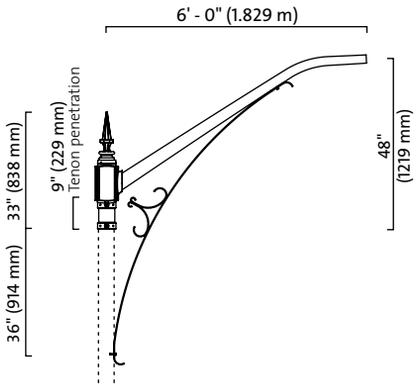

YR8

EPA: 4.07 sq.ft. **Weight:** 43.0 lbs. (17.2 kg)

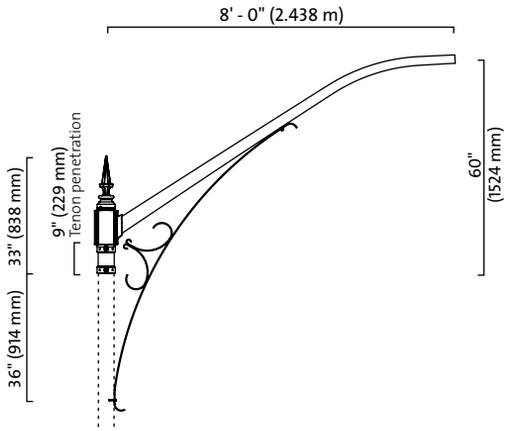

Specifications:

The **YR4 / YR6 / YR8** mounting arms feature a tapered spun aluminum arm of 4" by 2 7/8" (102 by 73 mm) to 2 3/8" (60 mm) O.D. at the luminaire end, mechanically assembled to the central housing.

The mounting arms include a decorative bent piece of aluminum, mechanically assembled to the pole and to the arm using stainless steel hardware.

The central pole adaptor is complete with a decorative cast-aluminum cap, slip-fits 9" (229 mm) over a 4" (102 mm), 5" (127 mm) or 5 9/16" (141 mm) O.D. pole or tenon.

Configurations

1A **2** **4**

Note: Philips Lumec reserves the right to modify the above details to reflect changes in the cost of materials and/or production and/or design without prior notice.

PHILIPS LUMEC

VC4 / VC6 / VC8 > EXTENDED REACH BRACKETS

VC4

EPA: 3.12 sq.ft. **Weight:** 24.0 lbs. (10.9 kg)

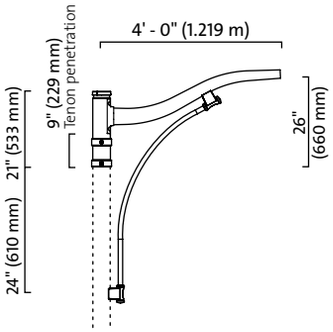

VC6

EPA: 4.06 sq.ft. **Weight:** 28.0 lbs. (12.7 kg)

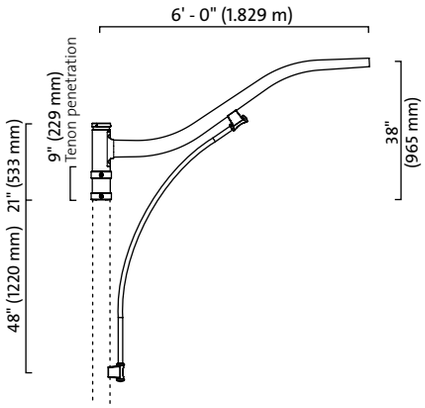

VC8

EPA: 5.02 sq.ft. **Weight:** 37.0 lbs. (16.8 kg)

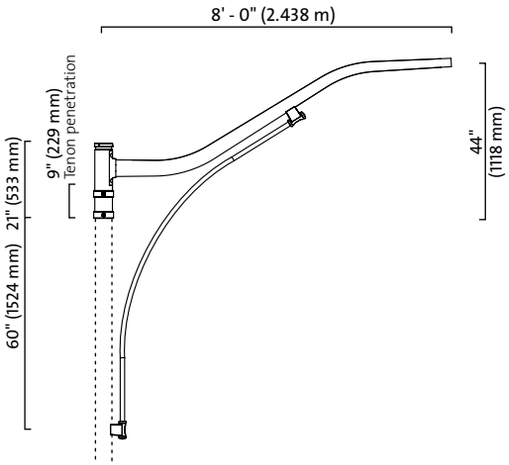

Specifications:

The **VC4 / VC6 / VC8** mounting arms feature a tapered spun aluminum arm of 4" by 2 7/8" (102 by 73 mm) to 2 3/8" (60 mm) O.D. at the luminaire end, mechanically assembled to the central housing.

The mounting arms include a decorative bent piece of aluminum rod mechanically assembled to the arm and to the pole using stainless steel hardware, complete with decorative cast aluminum cap on each end.

The central pole adaptor is complete with a cast-aluminum cap, slip-fits 9" (229 mm) over a 4" (102 mm), 5" (127 mm) or 5 9/16" (141 mm) O.D. pole or tenon.

Configurations

1A **2** **4**

Note: Philips Lumec reserves the right to modify the above details to reflect changes in the cost of materials and/or production and/or design without prior notice.

VR4

EPA: 3.49 sq.ft. **Weight:** 26.0 lbs. (11.8 kg)

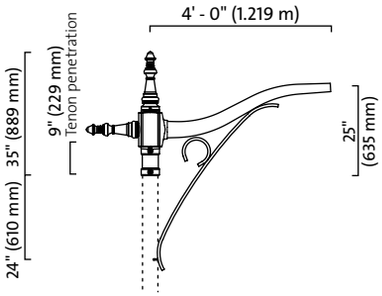

VR6

EPA: 4.44 sq.ft. **Weight:** 30.0 lbs. (13.6 kg)

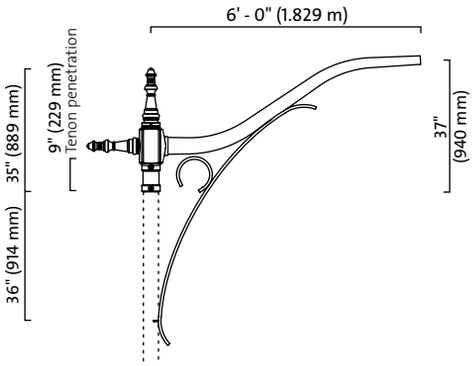

VR8

EPA: 5.33 sq.ft. **Weight:** 39.0 lbs. (17.7 kg)

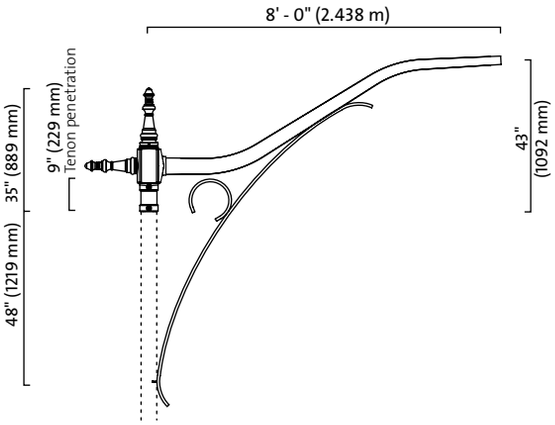

Specifications:

The **VR4 / VR6 / VR8** mounting arms feature a tapered spun aluminum arm of 4" by 2 7/8" (102 by 73 mm) to 2 3/8" (60 mm) O.D. at the luminaire end, mechanically assembled to the central housing.

The mounting arms include a decorative U-channel made of bent aluminum, mechanically assembled to the pole and to the arm using stainless steel hardware.

The central pole adaptor is complete with a decorative cast-aluminum cap. With the IA configurationa cast-aluminumdecorative side cap is added. The central pole adaptor slip-fits 9" (229 mm) over a 4" (102 mm), 5" (127 mm) or 5 9/16" (141 mm) O.D. pole or tenon.

Configurations

1A **2** **4**

PC4 / PC6 / PC8 > EXTENDED REACH BRACKETS

PC4

EPA: 2.88 sq.ft. **Weight:** 25.0 lbs. (11.3 kg)

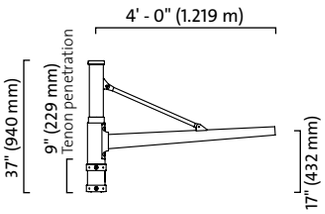

PC6

EPA: 3.63 sq.ft. **Weight:** 28.0 lbs. (12.7 kg)

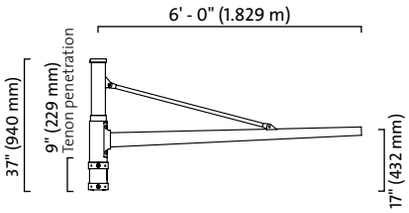

PC8

EPA: 4.39 sq.ft. **Weight:** 37.0 lbs. (16.8 kg)

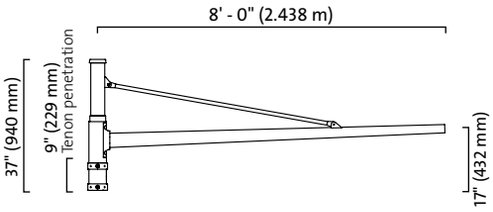

Specifications:

The **PC4 / PC6 / PC8** mounting arms feature a tapered spun aluminum arm of 4" by 2 7/8" (102 by 73 mm) to 2 3/8" (60 mm) O.D. at the luminaire end, mechanically assembled to the central housing.

The mounting includes a decorative extruded-aluminum tube mechanically assembled to the arm and to the central pole adaptor using stainless steel hardware.

The central pole adaptor is complete with a cast-aluminum cap, slip-fits 9" (229 mm) over a 4" (102 mm), 5" (127 mm) or 5 9/16" (141 mm) O.D. pole or tenon.

Configurations

1A **2** **4**

Note: Philips Lumec reserves the right to modify the above details to reflect changes in the cost of materials and/or production and/or design without prior notice.

PR4

EPA: 2.73 sq.ft. **Weight:** 26.0 lbs. (11.8 kg)

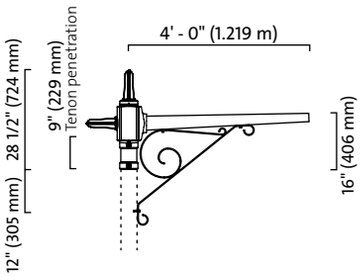

PR6

EPA: 3.44 sq.ft. **Weight:** 31.0 lbs. (14.1 kg)

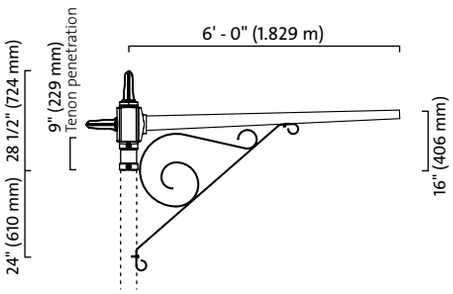

PR8

EPA: 4.14 sq.ft. **Weight:** 40.0 lbs. (18.1 kg)

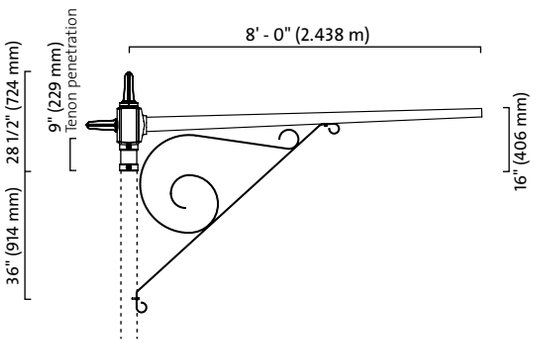

Specifications:

The **PR4 / PR6 / PR8** mounting arms feature a tapered spun aluminum arm of 4" by 2 7/8" (102 by 73 mm) to 2 3/8" (60 mm) O.D. at the luminaire end, mechanically assembled to the central housing.

The mounting arms include a decorative bent piece of aluminum, mechanically assembled to the pole and to the arm using stainless steel hardware.

The central pole adaptor is complete with a decorative cast-aluminum cap. With the IA configurationa cast-aluminumdecorative side cap is added. The central pole adaptor slip-fits 9" (229 mm) over a 4" (102 mm), 5" (127 mm) or 5 9/16" (141 mm) O.D. pole or tenon.

Configuration

1A **2** **4**

Note: Philips Lumec reserves the right to modify the above details to reflect changes in the cost of materials and/or production and/or design without prior notice.

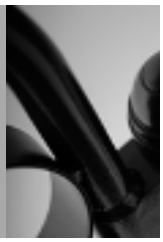

www.lumec.com

LUMEC HEAD OFFICE
640, Curé-Boivin Boulevard
Boisbriand, Québec
Canada J7G 2A7

T : 450.430.7040
F : 450.430.1453

ONTARIO OFFICE
189 Bullock Drive
Markham, Ontario
Canada L3P 1W4

T : 416.223.7255
F : 866.971.2825

MEXICO OFFICE
Zempoala #217
Col. Antenor Salas (Narvarte)
Mexico, D.F 03010

T : (5255) 5564.5242
F : 450.971.2816

For the details of our different agents and representatives, please consult the **Contact us** section of our Website.

© 2010 Philips Group.
All rights reserved. We reserve the right to change details of design, materials and finishes.

Hg / Some luminaires use fluorescent or high intensity discharge (HID) lamps that contain small amounts of mercury. Such lamps are labeled "Contains Mercury" and/or with the symbol "Hg." Lamps that contain mercury must be disposed of in accordance with local requirements. Information regarding lamp recycling and disposal can be found at **www.lamprecycle.org**

>> The choice to not print paper brochures anymore but to make them available on-line is an example of the positive environmental actions that Philips Lumec has decided to undertake. This not only considerably reduces our paper consumption but also guarantees the exactitude of the information our clients receive.

PHILIPS
LUMEC

Urban

Renaissance

RNS small

Project:
Location:
Cat.No:
Type:
Lamps: Qty:
Notes:

Philips Lumec's Renaissance Series mixes refinement together with ambition. The design reflects and evokes late 19th and early 20th century styling, perfectly suited for most urban and rural areas, while the state-of-the-art technology inside assures exceptional photometric performance, a long lifespan, and ease of maintenance.

Ordering guide: Luminaire

Example: RNS20-35W32LED4K-T-ACDR-LE5-120-DMG-SMA-RC-BKTX

Series	LED module		Lamp type	Globe material	Optical system	Voltage	Driver options
RNS20 **RNS30**	*4000K* **24W16LED4K** **30W16LED4K** **35W32LED4K** **55W32LED4K**	*3000K* **24W16LED3K** **30W16LED3K** **35W32LED3K** **55W32LED3K**	**T**	**ACDR** Acrylic globe **GL** Glass globe	**LE2** Type II (ASYM) **LE3** Type III (ASYM) **LE4** Type IV (ASYM) **LE5**[1] Type V (SYMM)	**120** 120V **208** 208V **240** 240V **277** 277V	**AST** Pre-set, progressive start-up **CLO** Pre-set, manage lumen depreciation **DALI** Pre-set, compatible with the DALI control system **OTL** Pre-set to signal end of life of the lamp **DMG** 0-10V **CDMGP** Dimming level set by user **CDMGE25** 8 hrs. 25% reduction **CDMGE50** 8 hrs. 50% reduction **CDMGE75** 8 hrs. 75% reduction **CDMGM25** 6 hrs. 25% reduction **CDMGM50** 6 hrs. 50% reduction **CDMGM75** 6 hrs. 75% reduction **CDMGS25** 4 hrs. 25% reduction **CDMGS50** 4 hrs. 50% reduction **CDMGS75** 4 hrs. 75% reduction

Ordering guide (continued)

Adaptors	Luminaire options	Poles & Brackets	Finish
MA1 1 1/4" NPT threaded hole adaptor **MA2** 1 1/2" NPT threaded hole adaptor **SMA**[6] Decorative retro side-mounted cast-aluminum, accepts tubes from 1 5/8" to 2 3/8" **SMB** Decorative contemporary side-mounted cast-aluminum, accepts tubes from 1 5/8" to 2 3/8" **YM** Yoke mount	**DE1** Decorative deflector **HS** House Side Shield **PH8**[2,3,4] Photoelectric cell **PH9**[2,3,4] Shorting cap **PHXL**[2,3,4] Photoelectric cell, extended life **RC**[2,3,4] Receptacle 3 pins **RCD**[2,3,4] Receptacle 5 pins **RCD7**[2,3,4] Receptacle 7 pins **SP2** Surge protector	Consult Philips.com/ luminaires for details and the complete line of Philips poles and brackets.	**BE2TX** Textured midnight blue **BE6TX** Textured ocean blue **BE8TX** Textured royal blue **BG2TX** Textured Sandstone **BKTX** Textured black **BRTX** Textured bronze **GN4TX** Textured blue green **GN6TX** Textured forest green **GN8TX** Textured Dk forest green **GNTX** Textured green **GR** Gray sandtex **GY3TX** Textured medium grey **NP** Natural aluminum **RD2TX** Textured burgundy **RD4TX** Textured scarlet **TG** Hammer-tone gold **TS** Hammer-tone silver **WHTX** Textured white

Footnotes

1. Not available with HS option.
2. **SMA** or **SMB** adaptors is required for this option.
3. Not available with YM adaptor.
4. Luminaire option **RC**, **RCD** or **RCD7** is required with this options.
5. Use of photoelectric cell or shorting cap is required to ensure proper illumination.
6. Only 3 pin receptacle **RC** is available with **SMA** adaptor.

RNS20 / 30 small Renaissance

Urban luminaire

Features

1. Constructed from top-quality materials, the Contemporary Lantern Series maintains excellent performance in even the most demanding environments.
2. Type LE2, LE3, LE4 and LE5 optic distributions are available to meet a range of lighting applications.
3. Acrylic globe has satin-finish to gently obscure the source without compromising photometry.
4. Tool free access to lamp and electrical components for ease of maintenance.
5. Unique styling merges traditional and contemporary design.

Dimensions

EPA: 1.43 ft^2 max.
ACDR Weight: 37 lbs (16.8kg) max.
GL Weight: 66 lbs (20.9kg) max.
EPA and weight are calculated without adaptor

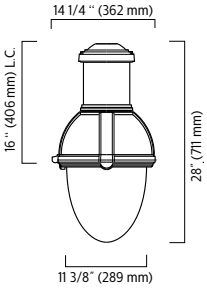

RNS20

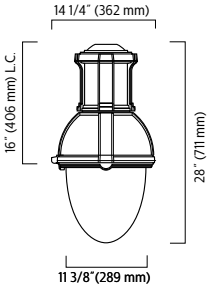

RNS30

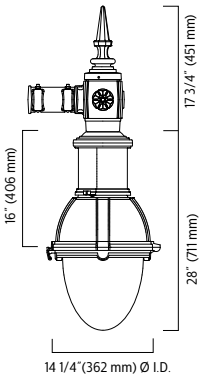

RNS20/30-SMA

EPA: 2.53 ft^2 max.
ACDR Weight: 48 lbs (21.8kg) max.
GL Weight: 57 lbs (25.9kg) max.

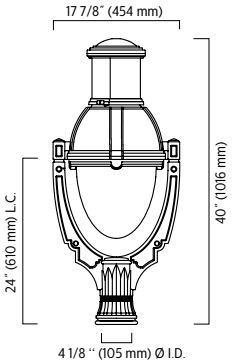

RNS20/30-YM

Predicted Lumen Depreciation Data

Predicted performance derived from LED manufacturer's data and engineering design estimates, based on IESNA LM-80 methodology. Actual experience may vary due to field application conditions. L_{70} is the predicted time when LED performance depreciates to 70% of initial lumen output. Calculated per IESNA TM21-11. Published L_{70} hours limited to 6 times actual LED test hours.

Ambient Temperature °C	Driver mA	Calculated L_{70} Hours	L_{70} per TM-21	Lumen Maintenance % at 60,000 hrs
35°C	**800 mA**	**>99,000 hours**	**>60,000 hours**	**>83%**

RNS20 / 30 small Renaissance

Urban luminaire

LED light engine technical information for RNS20-30

LED = Philips Lumileds Luxeon T, CRI = 70, CCT = 4000K (3985K +/- 275K or 3710K to 4260K)

System (LED + driver) rated life = 100,000 hrs[1]

LED Module	Typical delivered lumens	Typical system wattage (W)[2]	Typical System Current (A) @				LED current (mA)	HID [3] equivalent	Luminaire Efficacy Rating (Lm/W)	BUG rating
			120V	208V	240V	277V				
24W16LED4K-T-LE2	3040	28	0.25	0.15	0.13	0.12	530	70-100	107	B1-U2-G1
24W16LED4K-T-LE3	3017	28	0.25	0.15	0.13	0.12	530	70-100	106	B1-U2-G1
24W16LED4K-T-LE4	3032	28	0.25	0.15	0.13	0.12	530	70-100	107	B1-U2-G1
24W16LED4K-T-LE5	3050	28	0.25	0.15	0.13	0.12	530	70-100	107	B2-U2-G2
30W16LED4K-T-LE2	3825	37	0.32	0.19	0.17	0.15	700	70-100	103	B1-U2-G1
30W16LED4K-T-LE3	3796	37	0.32	0.19	0.17	0.15	700	70-100	103	B1-U2-G1
30W16LED4K-T-LE4	3815	37	0.32	0.19	0.17	0.15	700	70-100	103	B1-U2-G1
30W16LED4K-T-LE5	3837	37	0.32	0.19	0.17	0.15	700	70-100	104	B3-U3-G3
35W32LED4K-T-LE2	4236	36	0.31	0.19	0.17	0.16	350	70-100	118	B1-U3-G1
35W32LED4K-T-LE3	4175	36	0.31	0.19	0.17	0.16	350	70-100	116	B1-U2-G1
35W32LED4K-T-LE4	4225	36	0.31	0.19	0.17	0.16	350	70-100	117	B1-U2-G1
35W32LED4K-T-LE5	4249	36	0.31	0.19	0.17	0.16	350	70-100	118	B3-U3-G3
55W32LED4K-T-LE2	5945	53	0.47	0.27	0.24	0.22	530	100-150	111	B1-U3-G1
55W32LED4K-T-LE3	5900	53	0.47	0.27	0.24	0.22	530	100-150	110	B1-U3-G2
55W32LED4K-T-LE4	5930	53	0.47	0.27	0.24	0.22	530	100-150	111	B1-U3-G2
55W32LED4K-T-LE5	5994	53	0.47	0.27	0.24	0.22	530	100-150	113	B3-U3-G3

LED light engine technical information for RNS20-30

LED = Philips Lumileds Luxeon T, CRI = 70, CCT = 3000K (3045K +/- 175K or 2870K to 3220K)

System (LED + driver) rated life = 100,000 hrs[1]

LED Module	Typical delivered lumens	Typical system wattage (W)[2]	Typical System Current (A) @				LED current (mA)	HID [3] equivalent	Luminaire Efficacy Rating (Lm/W)	BUG rating
			120V	208V	240V	277V				
24W16LED3K-T-LE2	2824	28	0.25	0.15	0.13	0.12	530	70-100	100	B1-U2-G1
24W16LED3K-T-LE3	2802	28	0.25	0.15	0.13	0.12	530	70-100	100	B1-U2-G1
24W16LED3K-T-LE4	2817	28	0.25	0.15	0.13	0.12	530	70-100	100	B1-U2-G1
24W16LED3K-T-LE5	2763	28	0.25	0.15	0.13	0.12	530	70-100	98	B2-U2-G2
30W16LED3K-T-LE2	3552	37	0.32	0.19	0.17	0.15	700	70-100	97	B1-U2-G1
30W16LED3K-T-LE3	3525	37	0.32	0.19	0.17	0.15	700	70-100	96	B1-U2-G1
30W16LED3K-T-LE4	3543	37	0.32	0.19	0.17	0.15	700	70-100	96	B1-U2-G1
30W16LED3K-T-LE5	3484	37	0.32	0.19	0.17	0.15	700	70-100	95	B3-U2-G3
35W32LED3K-T-LE2	3907	36	0.31	0.19	0.17	0.16	350	70-100	109	B1-U2-G1
35W32LED3K-T-LE3	3877	36	0.31	0.19	0.17	0.16	350	70-100	108	B1-U2-G1
35W32LED3K-T-LE4	3897	36	0.31	0.19	0.17	0.16	350	70-100	108	B1-U2-G1
35W32LED3K-T-LE5	3939	36	0.31	0.19	0.17	0.16	350	70-100	109	B3-U3-G3
55W32LED3K-T-LE2	5522	53	0.47	0.27	0.24	0.22	530	100-150	103	B1-U3-G1
55W32LED3K-T-LE3	5480	53	0.47	0.27	0.24	0.22	530	100-150	103	B1-U3-G2
55W32LED3K-T-LE4	5508	53	0.47	0.27	0.24	0.22	530	100-150	103	B1-U3-G2
55W32LED3K-T-LE5	5567	53	0.47	0.27	0.24	0.22	530	100-150	104	B3-U3-G3

1. L70 = 70,000 hrs (at ambient temperature = 25°C)
2. System wattage includes the lamp and the LED driver
3. These guidelines show typical replacements for the HID wattage ranges shown. Replacements should always be confirmed with a photometric layout.

Note : Due to rapid and continuous advances in LED technology, LED luminaire data is subject to change without notice and at the discretion of Philips.

RNS20 / 30 small Renaissance

Urban luminaire

LED light engine technical information for RNS20-30 Yoke Mount (YM)

LED = Philips Lumileds Luxeon T, CRI = 70, CCT = 4000K (3985K +/- 275K or 3710K to 4260K)
System (LED + driver) rated life = 100,000 hrs[1]

LED Module	Typical delivered lumens	Typical system wattage (W)[2]	Typical System Current (A) @				LED current (mA)	HID [3] equivalent	Luminaire Efficacy Rating (Lm/W)	BUG rating
			120V	208V	240V	277V				
24W16LED4K-T-LE2-YM	2307	28	0.25	0.15	0.13	0.12	530	70-100	82	B1-U2-G1
24W16LED4K-T-LE3-YM	2431	28	0.25	0.15	0.13	0.12	530	70-100	87	B1-U2-G1
24W16LED4K-T-LE4-YM	2540	28	0.25	0.15	0.13	0.12	530	70-100	90	B1-U2-G1
24W16LED4K-T-LE5-YM	2645	28	0.25	0.15	0.13	0.12	530	70-100	94	B2-U2-G2
30W16LED4K-T-LE2-YM	2903	37	0.32	0.19	0.17	0.15	700	70-100	79	B1-U2-G1
30W16LED4K-T-LE3-YM	3059	37	0.32	0.19	0.17	0.15	700	70-100	83	B1-U2-G1
30W16LED4K-T-LE4-YM	3195	37	0.32	0.19	0.17	0.15	700	70-100	87	B1-U2-G1
30W16LED4K-T-LE5-YM	3328	37	0.32	0.19	0.17	0.15	700	70-100	90	B2-U2-G2
35W32LED4K-T-LE2-YM	3215	36	0.31	0.19	0.17	0.16	350	70-100	89	B1-U3-G1
35W32LED4K-T-LE3-YM	3388	36	0.31	0.19	0.17	0.16	350	70-100	94	B1-U2-G1
35W32LED4K-T-LE4-YM	3539	36	0.31	0.19	0.17	0.16	350	70-100	98	B1-U2-G1
35W32LED4K-T-LE5-YM	3686	36	0.31	0.19	0.17	0.16	350	70-100	102	B3-U3-G3
55W32LED4K-T-LE2-YM	4600	53	0.47	0.27	0.24	0.22	530	100-150	86	B1-U3-G1
55W32LED4K-T-LE3-YM	4847	53	0.47	0.27	0.24	0.22	530	100-150	91	B1-U3-G2
55W32LED4K-T-LE4-YM	5063	53	0.47	0.27	0.24	0.22	530	100-150	95	B1-U3-G2
55W32LED4K-T-LE5-YM	5273	53	0.47	0.27	0.24	0.22	530	100-150	99	B3-U3-G3

LED light engine technical information for RNS20-30 Yoke Mount (YM)

LED = Philips Lumileds Luxeon T, CRI = 70, CCT = 3000K nominal (3045K +/- 175K or 2870K to 3220K)
System (LED + driver) rated life = 100,000 hrs[1]

LED Module	Typical delivered lumens	Typical system wattage (W)[2]	Typical System Current (A) @				LED current (mA)	HID [3] equivalent	Luminaire Efficacy Rating (Lm/W)	BUG rating
			120V	208V	240V	277V				
24W16LED3K-T-LE2-YM	2143	28	0.25	0.15	0.13	0.12	530	70-100	76	B1-U2-G1
24W16LED3K-T-LE3-YM	2258	28	0.25	0.15	0.13	0.12	530	70-100	80	B1-U2-G1
24W16LED3K-T-LE4-YM	2359	28	0.25	0.15	0.13	0.12	530	70-100	84	B1-U2-G1
24W16LED3K-T-LE5-YM	2253	28	0.25	0.15	0.13	0.12	530	70-100	80	B2-U2-G2
30W16LED3K-T-LE2-YM	2696	37	0.32	0.19	0.17	0.15	700	70-100	73	B1-U2-G1
30W16LED3K-T-LE3-YM	2841	37	0.32	0.19	0.17	0.15	700	70-100	77	B1-U2-G1
30W16LED3K-T-LE4-YM	2968	37	0.32	0.19	0.17	0.15	700	70-100	81	B1-U2-G1
30W16LED3K-T-LE5-YM	2835	37	0.32	0.19	0.17	0.15	700	70-100	77	B2-U2-G2
35W32LED3K-T-LE2-YM	2986	36	0.31	0.19	0.17	0.16	350	70-100	83	B1-U3-G1
35W32LED3K-T-LE3-YM	3147	36	0.31	0.19	0.17	0.16	350	70-100	87	B1-U2-G1
35W32LED3K-T-LE4-YM	3287	36	0.31	0.19	0.17	0.16	350	70-100	91	B1-U2-G1
35W32LED3K-T-LE5-YM	3140	36	0.31	0.19	0.17	0.16	350	70-100	87	B3-U3-G3
55W32LED3K-T-LE2-YM	4272	53	0.47	0.27	0.24	0.22	530	100-150	80	B1-U3-G1
55W32LED3K-T-LE3-YM	4502	53	0.47	0.27	0.24	0.22	530	100-150	84	B1-U3-G2
55W32LED3K-T-LE4-YM	4702	53	0.47	0.27	0.24	0.22	530	100-150	88	B1-U3-G2
55W32LED3K-T-LE5-YM	4492	53	0.47	0.27	0.24	0.22	530	100-150	84	B3-U3-G3

1. L70 = 70,000 hrs (at ambient temperature = 25°C)
2. System wattage includes the lamp and the LED driver
3. These guidelines show typical replacements for the HID wattage ranges shown. Replacements should always be confirmed with a photometric layout.

Note : Due to rapid and continuous advances in LED technology, LED luminaire data is subject to change without notice and at the discretion of Philips.

RNS20 / 30 small Renaissance

Urban luminaire

Specifications:

Hood

Cast 356 aluminum dome, mechanically assembled on the luminaire, c/w a watertight grommet, mechanically assembled to the bracket with four bolts 3/8 16 UNC. This suspension system permits for a full rotation of the luminaire in 90 degree increments.

YM version: Cast 356 aluminum dome, mechanically assembled on the housing.

Housing

In a round shape, this housing is made of injection die cast A380 aluminum, complete with a weatherproof door giving a tool free access to the ballast, mechanically assembled. This suspension system permits for a full rotation of the luminaire in 90 degree increments.

YM version: In a round shape, this housing is made of die cast A380 aluminum, welded to the yoke.

Access-mechanism

A gravity die cast 356 aluminum frame with latch and hinge. The mechanism shall offer tool free access to the inside of the luminaire. An embedded memory retentive gasket shall ensure weatherproofing.

Globe

LEx: Made of one-piece seamless injection-molded (**ACDR**) DR acrylic or (**GL**) clear borosilicate glass globe having an inner prismatic surface. Complete with a semi-prismatic house side shield and external glare softening prisms. The globe is mechanically assembled and sealed onto the lower part of the heat sink.

Light engine

LEDgine composed of 4 main components:
Heat sink / LED module / Optical system / Driver

Electrical components are RoHS compliant.

Heat sink

Made of cast aluminum optimising the LEDs efficiency and life. Product does not use any cooling device with moving parts (only passive cooling device)

LED engine

LED type Philips Lumileds LUXEON T. Composed of high-performance white LEDs. Color temperature as per ANSI/NEMA bin Neutral White, 3000 Kelvin nominal (3045K +/- 175K) or 4000 Kelvin nominal (3985K +/- 275K), CRI 70 Min. 75 Typical.

Optical system

LE2 (type II asymmetrical), **LE3** (type III asymmetrical), **LE4** (type IV asymmetrical) or **LE5** (type V symmetrical) light distributions. Composed of high performance optical grade PMMA acrylic refractor lenses to achieve desired distribution optimized to get maximum spacing, target lumens and a superior lighting uniformity. Optical system is rated IP66. Performance shall be tested per LM 63, LM 79 and TM 15 (IESNA) certifying its photometric performance. Street side indicated.

Prismatic globe: IP66 rated optical system, composed of individual pre-oriented lens to achieve desired distribution, assembled with globe having an inner prismatic surface permanently sealed onto the lower part of the heat sink.

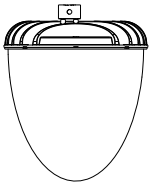

LE2 - Type II (asymmetrical)
LE3 - Type III (asymmetrical)
LE4 - Type IV (asymmetrical)
LE5 - Type V (symmetrical)

Driver

High power factor of 90% minimum. Electronic driver, operating range 50/60 Hz. Auto-adjusting universal voltage input from 120 to 277 VAC rated for both application line to line or line to neutral, Class I, THD of 20% max. Maximum ambient operating temperature from -40F(-40C) to 130F(55C) degrees. Driver comes with dimming compatible 0-10 volts.

The current supplying the LEDs will be reduced by the driver if the driver experiences internal overheating as a protection to the LEDs and the electrical components. Output is protected from short circuits, voltage overload and current overload. Automatic recovery after correction. Standard built-in driver surge protection of 2.5kV (min).

Driver options

AST: Pre-set driver for progressive start-up of the LED module(s) to optimize energy management and enhance visual comfort at start-up.

CLO: Pre-set driver to manage the lumen depreciation by adjusting the power given to the LEDs offering the same lighting intensity during the entire lifespan of the LED module.

DMG: Dimmable driver 0-10V.

OTL: Pre-set driver to signal end of life of the LED module(s) for better fixture management.

CDMG: Dynadimmer standard dimming functionalities including pre-programmed scenarios to suit many applications and needs from safety to maximum energy savings.

Ordering Code	Scenario	Dimming Time	Dimming Level
CDMG**S25**	Safety	4 hours	25% power dimming
CDMG**S50**	Safety	4 hours	50% power dimming
CDMG**S75**	Safety	4 hours	75% power dimming
CDMG**M25**	Median	6 hours	25% power dimming
CDMG**M50**	Median	6 hours	50% power dimming
CDMG**M75**	Median	6 hours	75% power dimming
CDMG**E25**	Economy	8 hours	25% power dimming
CDMG**E50**	Economy	8 hours	50% power dimming
CDMG**E75**	Economy	8 hours	75% power dimming

Surge Protector

Surge protector tested in accordance with ANSI/IEEE C62.45 per ANSI/IEEE C62.41.2 Scenario I Category C High Exposure 10kV/10kA waveforms for Line Ground, Line Neutral and Neutral Ground, and in accordance with U.S. DOE (Department of Energy) MSSLC (Municipal Solid State Street Lighting Consortium) model specification for LED roadway luminaires electrical immunity requirements for High Test Level 10kV / 10kA.

RNS20 / 30 small Renaissance

Urban luminaire

Specifications (continued)

Luminaire adaptor

MA1: The luminaire is suspended by means of a mounting adaptor with a 1¼" (32mm) NPT threaded hole accepting a threaded tube from the mounting. Retrofit adaptor for existing mounting

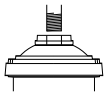

MA2: 1½" (38mm) NPT threaded hole accepting threaded tube from the mounting. Retrofit adaptor for existing mounting.

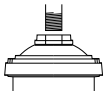

SMA: The luminaire is suspended by means of a decorative side-mounted cast aluminum adaptor. This adaptor accepts tubes from 1⅝" to 2⅜" (41 to 60 mm) and is adjustable to more or less 5°. The adaptor features a cast aluminum decorative cover and finial.

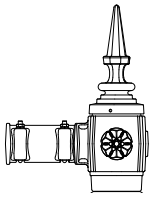

SMB: The luminaire is suspended by means of a decorative side-mounted cast aluminum adaptor. This adaptor accepts tubes from 1⅝" to 2⅜" (41 to 60 mm) and is adjustable to more or less 5°.

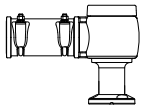

YM: Yoke made of cast 356 aluminum, c/w a fitter to fit over a 4in. (102mm) outside diameter x 4in.(102mm) long tenon, mechanically assembled with 4 set screws 3/8 16 UNC.

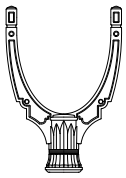

Luminaire options

DE1: Decorative deflector

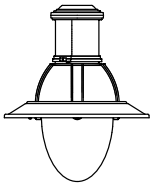

HS: House side shield

RC: Receptacle 3 pins

RCD: Receptacle 5 pins

RCD7: Receptacle 7 pins

SP2: Integral surge protector

Luminaire accessories

PH8: Photoelectric Cell, Twist-lock Type complete with receptacle. Allows a 90 degree rotation.

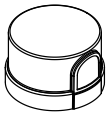

PHXL: Extended life photoelectric cell, Twist-lock Type complete with receptacle. Allows a 90 degree rotation.

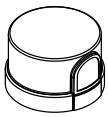

PH9: Shorting cap, Twist-lock Type complete with receptacle.

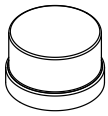

RNS20 / 30 small Renaissance

Urban luminaire

Specifications (continued)

Finish

The Thermosetting powder coating provided meets the color requirements of the AAMA 2604 specification as measured per ASTM D2244. The Thermosetting product is applied at a dry film of 2.5 to 4.0 mils (64-102 microns) on textured finishes, resulting in a durable long lasting finish.

Finish Options Include:
BE2TX: Textured Midnight Blue

BE6TX: Textured Ocean Blue

BE8TX: Textured Royal Blue

BG2TX: Textured Sandstone

BKTX: Textured Black

BRTX: Textured Bronze

GN4TX: Textured Blue Green

GN6TX: Textured Forest Green

GN8TX: Textured Dark Forest Green

GNTX: Textured Green

GR: Gray Sandtex

GY3TX: Textured Medium Grey

NP: Natural Aluminum

RD2TX: Textured Burgundy

RD4TX: Textured Scarlet

TG: Hammer-tone Gold

TS: Hammer-tone Silver

WHTX: Textured White

Wiring

Gauge (#14) TEW/AWM 1015 or 1230 wires, 6" (152mm) minimum exceeding from luminaire.

Hardware

All exposed screws shall be complete with Ceramic primer-seal base coat to reduce seizing of the parts and offers a high resistance to corrosion. All seals and sealing devices are made and/or lined with EPDM and/or silicone and/or rubber.

LED products (manufacturing standard)

The electronic components sensitive to electrostatic discharge (ESD) such as light emitting diodes (LEDs) are assembled in compliance with IEC61340 5 1 and ANSI/ESD S20.20 standards so as to eliminate ESD events that could decrease the useful life of the product.

Quality control

Manufactured to ISO 9001 2008 standards and ISO 14001-2004 International Quality Standards Certification.

Vibration resistance

Meets the ANSI C136.31, American National Standard for Roadway Luminaire Vibration specifications for Bridge/overpass applications. (Tested for 1.5G over 100 000 cycles)

Certifications and Compliance

UL8750 and UL1598 compliant. ETL and cETL Listed to U.S. and Canadian safety standards for wet locations. In accordance with applicable ANSI C136 standards. Renaissance LED luminaires are DesignLights Consortium qualified.

© 2016 Philips Lighting Holding B.V. All rights reserved.
Philips reserves the right to make changes in specifications and/or to discontinue any product at any time without notice or obligation and will not be liable for any consequences resulting from the use of this publication.
philips.com/luminaires

Philips Lighting North America Corporation
200 Franklin Square Drive, Somerset, NJ 08873
Tel. 855-486-2216

Philips Lighting Canada Ltd.
281 Hillmount Rd, Markham, ON, Canada L6C 2S3
Tel. 800-668-9008

This drawing is property of Spring City Elect. Mfg. and is issued to the recipient with the understanding that it shall not be copied, duplicated, passed on to unauthorized parties, nor used for any purpose other than that for which it is specifically furnished except with Spring City's written permission.

BANNER ARM SPECIFICATIONS

STYLE:	BANNER
PIPE:	1 1/4" THREADED NPT
LENGTH:	19 1/2"
MATERIAL:	STEEL PIPE WITH CAST ALUMINUM ORNAMENTATION
FINISH:	POWDER COAT - RIVER TEXTURE GLOSS BLACK
CATALOG NO.:	SBNUBT-1S-1.25-19.50-F02-CU

Spring City Electrical Mfg. Co.
HALL AND MAIN STREETS - P.O. BOX 19 - SPRING CITY, PA. 19475
PHONE (610) 948-4000 - FAX (610) 948-5577 - WWW.SPRINGCITY.COM

DESCRIPTION	BANNER ARM		
CUSTOMER / JOB	BURLINGTON, VT		
SCALE	DRAWN BY:	DATE	DRAWING NO.
N.T.S.	T.E.B.	12-11-17	S104039

REV	DATE	DESCRIPTION	INIT
A	XX/XX/XX	RELEASED TO PRODUCTION	BAS

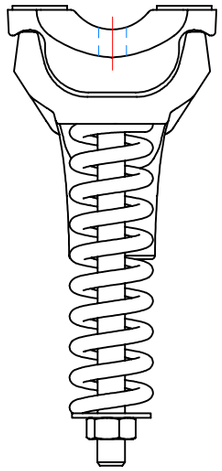

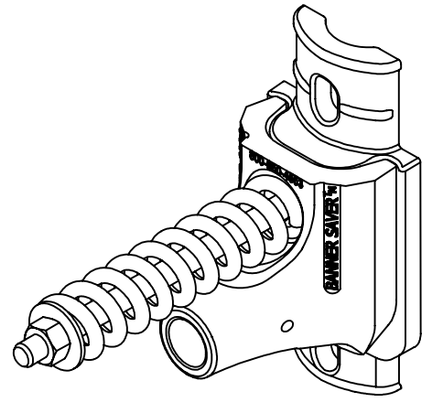

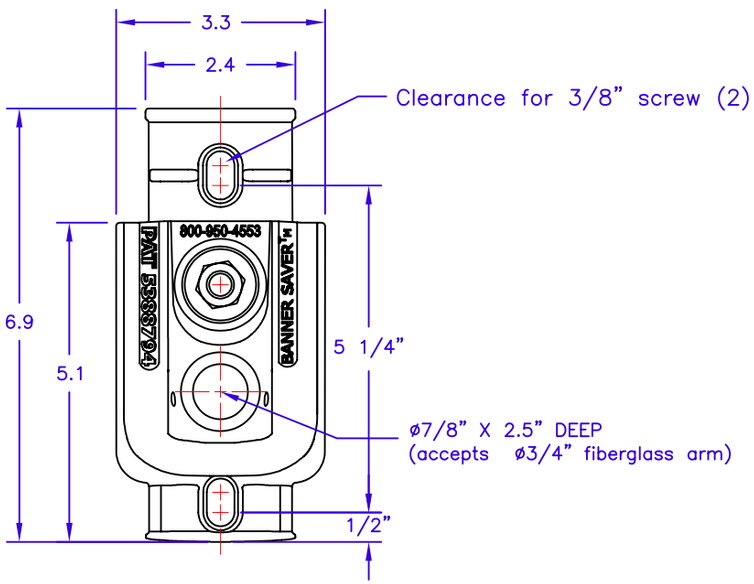

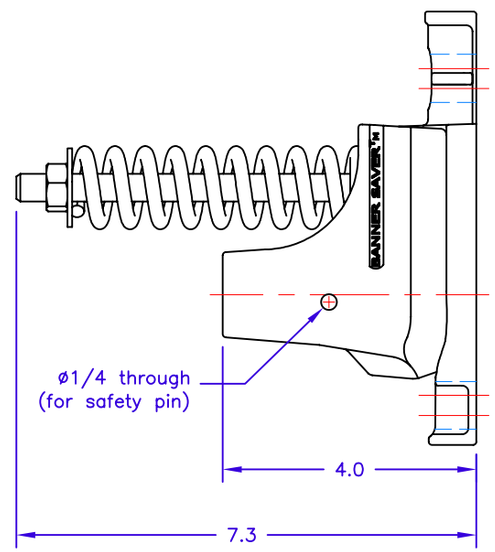

DESRIPTION: BANNERSAVER SMALL
MATERIAL: CAST ALUMINUM

INCH DRAWING
DO NOT SCALE DRAWING.
C'SINK ALL TAPPED HOLES.
REMOVE ALL BURRS AND SHARP CORNERS.

TOLERANCES UNLES SPECIFIED

ONE PLACE	± 0.31
TWO PLACE	± 0.010
THREE PLACE	± 0.005
FOUR PLACE	± 0.0005
MACHINED ANGLES	± 1°

ALL STOCK AND CUT-OFF DIMENSIONS ± 0.031
UNFINISHED CASTING AND WELDMENT DIM. ± 0.062
125√ OR BETTER ON ALL MACHINED SURFACES.

THIS DRAWING/ELECTRONIC FILE CONTAINS PROPRIETARY INFORMATION WHICH IS THE EXCLUSIVE PROPERTY OF BRITTEN BANNERS, INC. ANY USE OR DISCLOSURE OF THIS INFORMATION IS PROHIBITED UNLESS APPROVED BY BRITTEN BANNERS, INC. IN WRITING. THE INFORMATION CONTAINED HEREIN IS TO BE USED ONLY IN THE BEST INTERESTS OF BRITTEN BANNERS, INC.

Britten®

DESCRIPTION: BANNER SAVER SMALL

PROJECT NAME:

DESIGN BY		CHECKED BY	TOTAL SHEETS
DRAWN BY	BAS	DATE 01/10/06	1
SCALE	1 : 1		
SHEET No. 1	BannerSaverSm		

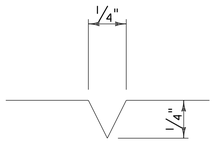

SCORE MARK DETAIL

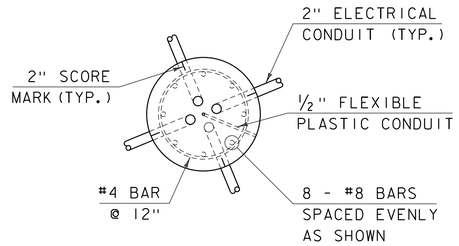

PLAN

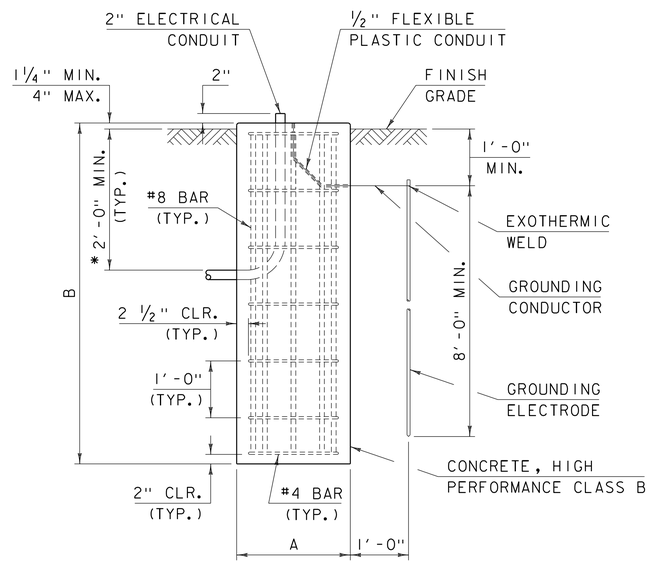

ELEVATION

*3'-0" WHEN UNDER ROADWAY

MOUNTING HEIGHT (H) (FT)	BRACKET ARM LENGTH (L) (FT)	A (FT)	B (FT)
H < 20	ANY LENGTH	2	6
20 ≤ H < 40	L < 8	2	6
20 ≤ H < 40	8 ≤ L < 10	2.5	6
20 ≤ H < 40	10 ≤ L ≤ 16	2.5	8

GENERAL NOTES:

1. CONCRETE SHALL MEET THE REQUIREMENTS OF CONCRETE, HIGH PERFORMANCE CLASS B AS SPECIFIED IN SECTION 501 OF THE CURRENT VTRANS STANDARD SPECIFICATIONS FOR CONSTRUCTION, AND ITS LATEST REVISIONS, AND HAVE A SMOOTH LEVEL TOP SURFACE FINISHED WITH A 1/2 INCH RADIUS EDGING TOOL.
2. REINFORCING STEEL SHALL MEET THE REQUIREMENTS OF REINFORCING STEEL, LEVEL I AS SPECIFIED IN SECTION 507 OF THE CURRENT VTRANS STANDARD SPECIFICATIONS FOR CONSTRUCTION, AND ITS LATEST REVISIONS.
3. ANCHOR BOLTS, WASHERS, NUTS AND OTHER HARDWARE SHALL BE IN ACCORDANCE WITH SUBSECTION 714.09, OF THE CURRENT VTRANS STANDARD SPECIFICATIONS FOR CONSTRUCTION, AND ITS LATEST REVISIONS, AND OF THE SIZE, TYPE AND PLACEMENT AS SPECIFIED BY THE TRANSFORMER BASE MANUFACTURER.
4. SCORE MARKS SHALL BE ON THE TOP OF THE LIGHT POLE FOUNDATION DIRECTLY ABOVE ALL CONDUIT LOCATIONS TO SHOW LOCATION OF CONDUIT(S).
5. EACH LIGHT POLE FOUNDATION SHALL BE LIMITED TO A MAXIMUM OF FOUR ELECTRICAL CONDUITS. ELECTRICAL CONDUITS SHALL BE PLACED SO AS NOT TO INTERFERE WITH THE LOCATION OF THE ANCHOR BOLTS.
6. THE MINIMUM SWEEP RADIUS FOR ELECTRICAL CONDUIT SHALL BE 12 INCHES.
7. WHEN LOCATED BEHIND GUARDRAIL, LIGHT POLE FOUNDATIONS SHALL BE INSTALLED OUTSIDE OF THE APPLICABLE DEFLECTION DISTANCE AS IDENTIFIED BY THE CURRENT EDITION OF THE "AMERICAN ASSOCIATION OF STATE HIGHWAY AND TRANSPORTATION OFFICIALS" (AASHTO) "ROADSIDE DESIGN GUIDE", AND ITS LATEST REVISIONS.
8. DETAILS ARE FOR CAST IN PLACE LIGHT POLE FOUNDATIONS ONLY. CONSTRUCTION DRAWINGS SHALL BE SUPPLIED FOR PRE-CAST LIGHT POLE FOUNDATIONS.
9. WHERE ALUMINUM COMES INTO CONTACT WITH CONCRETE, THE CONTACTING SURFACES SHALL BE SEPARATED WITH A PREFORMED FABRIC BEARING PAD IN ACCORDANCE WITH SUBSECTION 731.01 OF THE VTRANS STANDARD SPECIFICATIONS FOR CONSTRUCTION, AND ITS LATEST REVISIONS. THIS WORK SHALL BE CONSIDERED INCIDENTAL TO OTHER STREET LIGHTING ITEMS.

REV.	DATE	DESCRIPTION
0	DEC. 21, 2015	ORIGINAL APPROVAL
1	JUL. 25, 2016	UPDATED REBAR COVER FOR HPC, ADDED NOTE 9 REVISED NOTES 1, 2, 3, 7, UPDATED CHART

OTHER STANDARDS REQUIRED: NONE

VTRANS AND FHWA APPROVAL ON FILE WITH CONTRACT ADMINISTRATION

LIGHT POLE FOUNDATION DETAILS

VTrans Working to Get You There VERMONT AGENCY OF TRANSPORTATION

STANDARD

T-133

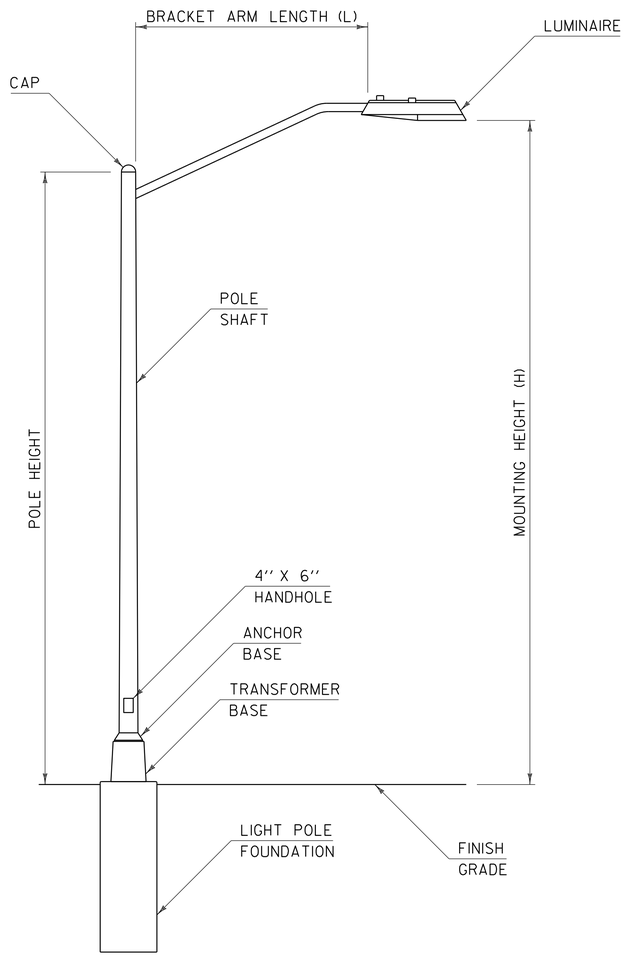

LIGHT POLE DETAIL

NOTE:

1. STREET LIGHTING SHALL BE INSTALLED SO THAT THE TRANSFORMER BASE IS SIX FEET FROM EDGE OF PAVEMENT OR FACE OF CURB (WHICHEVER APPLIES), UNLESS OTHERWISE NOTED IN THE PLANS.
2. MOUNTING HEIGHT (H) SHALL BE TO THE SURFACE BEING ILLUMINATED DIRECTLY BELOW THE LUMINAIRE.

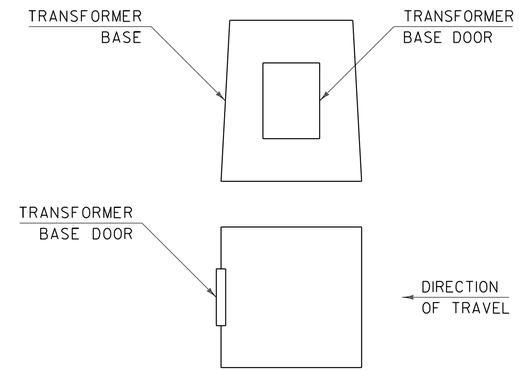

TRANSFORMER BASE DETAIL

#SLX–ZZZW–LED

LIGHT POLE TAG DETAIL

NOTES:

1. A LIGHT POLE TAG SHALL BE ATTACHED TO ALL LIGHT POLES, EXCEPT ORNAMENTAL POLES.
2. THE LIGHT POLE TAG SHALL BE NATURAL ALUMINUM OR PAINTED FLAT BLACK. WHEN PAINTED, ALL PUNCHING, STAMPING, ENGRAVING AND PHOTO-ETCHING SHALL BE DONE PRIOR TO PAINTING.
3. THE LIGHT POLE TAG SHALL BE WELDED, RIVETED OR BOLTED (WITH VANDAL PROOF BOLTS IF BOLTED) TO THE LIGHT POLE.
4. THE BASE MATERIAL FOR LIGHT POLE TAG SHALL BE ALUMINUM WITH A MINIMUM THICKNESS OF 0.10 INCHES.
5. THE CHARACTERS ON THE LIGHT POLE TAG SHALL BE PUNCHED, STAMPED, ENGRAVED OR PHOTO-ETCHED. STAMPING OR ENGRAVING SHALL PENETRATE A MINIMUM OF HALF THE THICKNESS OF THE BASE MATERIAL.
6. THE LIGHT POLE TAG SHALL BE ATTACHED TO THE POLE DIRECTLY ABOVE THE HANDHOLE, WITH THE TOP OF THE LIGHT POLE TAG FOUR FEET ABOVE THE TOP OF THE TRANSFORMER BASE.
7. LIGHT POLE TAG CHARACTER ''X'' SHALL BE THE DESIGNATED STREET LIGHT NUMBER (SL) AS SHOWN ON THE LIGHTING PLANS.
8. LIGHT POLE TAG CHARACTER ''ZZZ'' SHALL BE THE WATTAGE OF THE LUMINAIRE.

GENERAL NOTES:

1. TRANSFORMER BASES SHALL INCLUDE THE TRANSFORMER BASE AND ALL HARDWARE REQUIRED TO MOUNT THE LIGHT POLE TO THE TRANSFORMER BASE.
2. LIGHT POLE SHALL INCLUDE POLE SHAFT, ANCHOR BASE, CAP AND LIGHT POLE TAG.
3. LIGHT POLES SHALL BE TAPERED AND SHALL BE CONSTRUCTED OF ALUMINUM.
4. ALL LIGHT POLES SHALL BE MOUNTED ON COMPATIBLE TRANSFORMER BASES.
5. TRANSFORMER BASES SHALL NOT OVERHANG THE LIGHT POLE FOUNDATION.
6. TRANSFORMER BASES AND ALL HARDWARE CONTAINED WITHIN THE TRANSFORMER BASES SHALL BE BREAKAWAY AND CONFORM TO THE REQUIREMENTS OF THE CURRENT ''AMERICAN ASSOCIATION OF STATE HIGHWAY AND TRANSPORTATION OFFICIALS'' (AASHTO) ''STANDARD SPECIFICATIONS FOR STRUCTURAL SUPPORTS FOR HIGHWAY SIGNS, LUMINAIRES, AND TRAFFIC SIGNALS'', AND ITS LATEST REVISIONS.
7. LUMINAIRES SHALL BE AS SPECIFIED IN THE PLANS.
8. ALL ELECTRICAL MATERIAL AND ELECTRICAL WORK SHALL MEET THE REQUIREMENTS OF THE NATIONAL ELECTRICAL CODE (NEC) AND LOCAL AND STATE CODES. THIS MATERIAL AND WORK SHALL BE SUBJECT TO INSPECTION AND APPROVAL BY THE AREA ELECTRICAL INSPECTOR AND/OR THE POWER COMPANY WITH JURISDICTION IN THE PROJECT AREA AND VTRANS SIGNAL TECHNICIANS.
9. ALL WELDS SHALL CONFORM TO THE REQUIREMENTS OF THE CURRENT ''AMERICAN WELDING SOCIETY'' (AWS) D1.2 ''STRUCTURAL WELDING CODE - ALUMINUM''.
10. POLES FOR ORNAMENTAL LIGHTING SHALL BE AS SPECIFIED IN THE PLANS.

REV.	DATE	DESCRIPTION
0	DEC. 21, 2015	ORIGINAL APPROVAL
1	MAR. 10, 2017	DELETED REQUIREMENT FOR BRACKET ARMS TO BE SINGLE MEMBER TYPE.

OTHER STANDARDS REQUIRED: T-133

VTRANS AND FHWA APPROVAL ON FILE WITH CONTRACT ADMINISTRATION

LIGHT POLE & TRANSFORMER BASE DETAILS

VTrans Working To Get You There VERMONT AGENCY OF TRANSPORTATION

STANDARD

T-134

Materials & Furnishings Details

Techo Bloc Concrete Pavers

From Michael Vargason:

For all pavers, we want a dense finish. Washed, Tumbled, or Brushed finish might encourage salt to enter the paver and start to break it down.

For Techo Block, shale grey looks like the only color option with a range of shades.

From Product Reps (tried to group responses to questions that came in through a bunch of different emails):

1.) What is the warranty and what does it cover?
   - Based on current practice in the USA and Canada for product warranty on ICI projects, we have decided to define our warranty for ICI projects to be **1 year minimum and according to contract bidding documents**.
   - If you have any questions regarding this warranty you can contact Lincoln Paiva, our Director of Technical Service directly at 450-656-2992 ext 1377, or Lincoln.paiva@techo-bloc.com

2.) Do you recommend sealing the pavers?
   - There are certainly a lot of benefits to sealing pavers. Sealing pavers, slabs and walls can help improve the beauty and longevity of your products much like waxing a car. Sealing them can enhance the color and make the product more stain resistant and easier to keep clean. The sealer also helps keep the joint sand in place. We typically leave that decision to the decision makers of the project.
   - Sealing will certainly help with water absorption that helps prevent degredation but its mostly for esthetics and stain prevention.

3.) Concrete mix design for pavers?
   - Please let me know which products you are referring to. We have thousands of photos of completed projects, is there any in particular that you would like to see photos of?
   - The concrete mix design is something that we do not typically distribute. However, I have attached multiple material and data sheets that may provide the information that you were looking for. Please let me know if this helps or if you have any other questions.

4.) Any test results for pavers showing resistance to de-icing both chloride and non-chloride?
   - Our products are manufactured to all US and Canadian standards, tested in over 100 freeze thaw cycles in a saline solution. With this being said, we have test results for individual products. If there are certain products you have in mind for this project I will be happy to provide the necessary information regarding this.
   - Our pavers are 100% de-icing salt resistant and they do have a lifetime warranty on any defects should a problem arise, so I wouldn't be concerned about that. Sealing

the pavers will certainly protect them from oils and typical dirt associated with a paver in a commercial application and will to some degree help offset the de-icing salt issue. We suggest looking at the Alliance product line, depends on the finish you're looking for.http://www.alliancegator.com/products/

- As far as the pavers themselves, we have tested many times over with verified Freeze/ Thaw results, the structural integrity in northern climates is a non-issue.
    - Mass Loss (Max):
    - 225g/m at 28 cycles
    - 500 g/m at 49 cycles
- We have several options as you mentioned, but if these are simply going into a streetscape, tree belt area, the Victorien permeable - 60mm is safe for light vehicular traffic, our Inflo would also be suitable, but not currently available in the 4 x 8" size. If you follow the link below, it will take you right to our spec book where we list all the ASTM Data for our products. Beginning on page Page 87, if you haven't been there yet, begins the section on our permeable pavers.
-

5.) Projects sites where they have held up to conditions similar to Burlington over a long period?

- A project I would reference is our Stonedge manufacturing facility in St. Hubert Canada.
- Installed 7 years ago, de-icing salts are used regularly, this is a permeable application no sand is acceptable, it is plowed with a volvo D10 loader.
- This install sees over 200 loaded tractor trailers a day
- Please see the video link below to see scope of project.

https://youtu.be/71drF5dMpAI

- We have an installation in kittery ME thats 15 years old performing perfectly. Commercial side walks around kittery trading post. If you need photos I may be able to get them.

6.) Project owner references?

- This is certainly something that we can obtain. If there is a certain product or project that you are looking for we can certainly put you in touch.

7.) Any best practices that Techo-Bloc recommends for maintaining concrete pavers?

-We have recently added a care and maintenance section of our website, this should take you through the steps and best practices we recommend, if you have any questions please do not hesitate to contact me.

https://www.youtube.com/watch?v=71drF5dMpAI&feature=youtu.be

Installation guide

TYPICAL APPLICATION USAGE

SECTOR	TRAFFIC TYPE & APPLICATIONS	PERMEABLE PAVERS
RESIDENTIAL	**1. Light traffic** Cars and occasional light service trucks (ex. residential driveways)	- Antika - Blu 80 mm - Inflo - Mista Random - Pure - Victorien 60 mm permeable - Villagio
	2. Pedestrian Pedestrian only and at all times (ex. patios)	- Antika - Blu 80 mm - Blu 60 mm - Inflo - Mista Random - Pure - Victorien 60 mm permeable - Villagio
ICI (Industrial, Commercial and Institutional)	**3. Road traffic** Cars, heavy trucks, buses (ex. boulevards, main or secondary streets, pedestrian crossings, industrial, ports and airport areas)	- Inflo
	4. Light traffic Cars and occasional light service trucks (ex. parking lots, sidewalks)	- Inflo - Pure
	5. Pedestrian Pedestrian only and at all times, without cars, or trucks or other mobile equipment (ex. terraces, parks, pedestrian walkways)	- Inflo - Pure

Installation guide

INFILTRATION CHART

PERMEABLE PAVERS	PERCENT OF SURFACE OPENING (%)	JOINT WIDTH (mm)	INFILTRATION RATE[1] (mm/h)
ANTIKA[2]	Variable	Variable	993 in./hr (25 227 mm/hr)
BLU 80 mm[2]	3.0	9/32" (7 mm)	570 in./hr (14 475 mm/hr)
INFLO[1]	5.8	1/2" (13 mm)	837 in./hr (21 267 mm/hr)
MISTA RANDOM[1]	6.3	3/16" (4 mm) to 9/16" (14 mm)	610 in./hr (15 505 mm/hr)
PURE[2]	5.0	3/8" (10 mm)	726 in./hr (18 440 mm/hr)
VICTORIEN 60 mm PERMEABLE[1]	9.6	3/8" (10 mm)	909 in./hr (23 085 mm/hr)
VILLAGIO[1]	8.0	3/8" (9 mm) to 9/16" (15 mm)	896 in./hr (22 750 mm/hr)
PERMEABLE SLAB	**PERCENT OF SURFACE OPENING (%)**	**JOINT WIDTH (mm)**	**INFILTRATION RATE[1] (mm/h)**
BLU 60 mm[2]	3.0	9/32" (7 mm)	570 in./hr (14 475 mm/hr)

[1] Measurements were taken at various sites in conformity to the standard ASTM C 1701-09.
[2] Measurements were taken at various sites in conformity to the standard ASTM C 1781.

OTHER PERMEABLE POSSIBILITIES

Blu 60 mm SLAB

(page 28 to 33)

Antika PAVER

(page 53)

Blu 80 mm PAVER

(page 55 to 59)

Mista Random PAVER

(page 76)

Villagio PAVER

(page 86)

NEW

Valet

DESCRIPTION: paver **TEXTURE:** Basalt

PALLET OVERVIEW

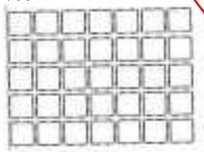

Specifications per pallet	Imperial	Metric
Cubing	92.31 ft²	8.58 m²
Weight	2 577 lbs	1 169 kg
Number of rows	9	
Coverage per row	10.26 ft²	0.95 m²
Linear coverage per row	18.95 lin. ft	5.78 lin. m

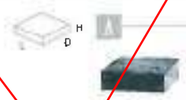

Unit dimensions	in	mm	Units/pallet
Height	2 3/8	60	315 units
Depth	6 1/2	165	
Length	6 1/2	165	

NOTES

See page 48 to 51 for more technical information.

Victorien 60 mm

DESCRIPTION: Paver **TEXTURE:** Smooth

PALLET OVERVIEW

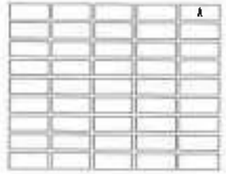

Specifications per pallet		Imperial	Metric
60 mm	Cubing	123.70 ft²	11.50 m²
	Weight	3 481 lbs	1 579 kg
	Number of rows	11	
	Coverage per row	11.25 ft²	1.05 m²
	Linear coverage per row — Depth	15.87 lin. ft	4.84 lin. m
	Length	31.74 lin. ft	9.68 lin. m

Unit dimensions	in	mm	Units/pallet
Height	2 3/8	60	495 units
Depth	4 1/4	108	4 units/ft²
Length	8 1/2	216	43.10 units/m²

NOTES

See page 48 to 51 for more technical information.

01 | Linear pattern

02 | Parquet pattern

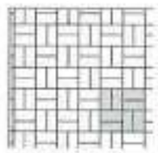

03 | Herringbone pattern

04 | Modified Herringbone

Patterns are for design inspiration only. The installer is responsible to calculate & purchase the correct amount of material.

TECHO-BLOC WARRANTY

TECHO-BLOC IS PROUD TO CERTIFY that our paving stones and retaining walls meet the latest industry standards in Canada and the United States of America. All Techo-Bloc manufactured landscape products comply with and surpass all applicable standards established by the CSA *(Canadian Standards Association)*, ASTM *(American Society for Testing and Materials)* and the BNQ *(Bureau de normalisation du Québec)*, recognized as the strictest standards throughout the world.

TECHO-BLOC OFFERS A TRANSFERABLE LIFETIME WARRANTY on the structural integrity of all paving stones and retaining wall stones it manufactures. It covers any disintegration and/or decomposition of the above mentioned products resulting from natural causes and the abnormal deterioration of the surface due to the use of sodium chloride (NaCl) such as de-icing salt.

IF PRODUCTS PROVE DEFECTIVE, we will replace these units.
Techo-Bloc's responsibility is limited to its products only and not to the costs related to the installation of those products. Installation of the product constitutes your acceptance of the product as is. Techo-Bloc will honor this transferable lifetime warranty with a proof of purchase such as an invoice or delivery slip.

All conditions of the Techo-Bloc warranty apply to the High Definition collection.

STONEDGE COLLECTION WARRANTY

STONEDGE™ LANDSCAPE AND MASONRY PRODUCTS are manufactured under the highest standards of quality and workmanship. This warranty is offered to the original Consumer Purchaser (Homeowner), for as long as they own their home. STONEDGE™ warrants that the product is free from defects in material and workmanship, and is in compliance with the specifications of the Canadian Standards Association and the American Standards for testing Materials.

All exclusions concerning color, efflorescence, polymeric haze, construction-born residue, compactor & snow removal equipment apply. Unlike the Techo-Bloc products, Stonedge products are not warranted for the use of sodium chloride (NaCl) such as de-icing salt. We recommend the use of these products in backyards where winter access is limited.

NOTE: This warranty does not apply to any breakage, chipping, natural wear or other deterioration that were caused from improper design or installation which does not comply with applicable codes, the ICPI *(Interlocking Concrete Pavement Institute)*, NCMA *(National Concrete Masonry Association)* and recognized work procedures. This warranty does not apply to any damage resulting from a natural disaster or from a deliberate and/or negligible act on the part of the purchaser, owner of the building, installer or any third party.
For industry information about efflorescence, polymeric haze or information pertaining to installation specifications, please visit **www.icpi.org** or **www.ncma.org**.

COLOR

Due to the inherent nature of printed literature and current digital media, Techo-Bloc cannot guarantee specific color matching to printed representations of its color swatches.

Each color option is composed of a variety of darker & lighter tones. Natural ingredients such as granite are present within the recipe to allow for a range in tones, veining and textures from one stone to another. Therefore, color samples shown are approximate representations of our standard colors and actual product colors may vary.

Final color selection should be made at your local dealer from stocked product. Techo-Bloc always recommends immediately verifying the product and color upon reception. If there are any discrepancies, contact your local dealer before continuing your project. Installation of the product constitutes your acceptance of the product as is.

PROPER COLOR DISTRIBUTION AND LAYING TECHNIQUES

Proper installation enhances the overall color of pavement. Units should be randomly picked from at least two pallets when installing. This creates an attractive and subtle blending of color.

EFFLORESCENCE

This warranty does not apply to efflorescence. Efflorescence is a natural occurring process in all concrete products which sometimes appears in the form of a white powdery film on the pavement surface. Efflorescence is more perceivable in darker colors such as Onyx Black and Chocolate Brown as there is a higher level of contrast than with other blended colors. It does not, in any way, compromise the functionality or the structural integrity of the product. Although efflorescence cannot be prevented, it will wash off over time or can be cleaned with efflorescence cleaner. Techo-Bloc accepts no responsibility or liability for this condition.

POLYMERIC HAZE

Polymeric haze from the use of polymeric joint sand may appear on your concrete products if the sand was not removed from the surface of the paver properly. This does not, in any way, affect the integrity of the product or your installation. The hazing will weather away naturally with time and rain.
It can be removed with a specialized cleaner; you are advised to contact your contractor or the polymeric sand company used for advice on recommendations. Techo-Bloc accepts no responsibility or liability for this occurrence.

CONSTRUCTION RESIDUE

A by-product of cutting with a saw is residue-filled water or concrete dust. Residue-filled water or re-hydrated dust can cling to the surface and leave a concrete stain. It is recommended to wash and remove the water or concrete dust from the surface of the pavers before it dries. Construction residue can also happen through soil disturbance or environmental elements. These contaminants should be removed immediately but do not affect the integrity of the product or your installation. Techo-Bloc accepts no responsibility or liability for these occurrences.

COMPACTOR AND SNOW REMOVAL EQUIPMENT

Pavers with an embossed surface (high and low points) are more susceptible to scuff marks from vibratory plate compactors used in most concrete paver installations. Techo-Bloc recommends the use of a urethane mat between the plate and the paver surface during compacting. Contact your equipment supplier for more information about accessories for this purpose. Also, snow removal equipment should have the proper spacing, bumpers, and rubber blade guards to protect the surface of the pavers. Techo-Bloc is not responsible for damage caused by the misuse of compaction or snow removal equipment, which may leave scuff marks, or burns on pavers.

TECHNICAL DATA SHEET

Product name: VICTORIEN 60 mm PERMEABLE

Product type: Permeable interlocking concrete paver (PICP)

Geometric characteristics

Dimensions (in.): height x width x length (Dimensions include the joint)
2 3/8 x 4 1/4 x 8 1/2 (60 x 108 x 216 mm)

Joint width: 3/8 in. (10 mm)

Approximate weight: 6.5 lb (2.95 kg)

Dimensional tolerances[1]
Length and width: ± 1/16 in. (1.6 mm)
Height: ± 1/8 in. (3.2 mm)

Physical characteristics[1]

Compressive strength: 8000 psi (55 MPa) (min)

Freeze-thaw durability
Loss of mass after 50 cycles: 1 % (max)

Water absorption: 5 % (max)

Surface Infiltration characteristics

Percent of open surface area: 9.6 %

Surface Infiltration rate[2]**:** 909 in./hr (23 085 mm/hr)

Runoff Coefficient[3]: 0.25 (PICP on high infiltration soils)
0.40 (PICP on low infiltration soils)

Americans with Disabilities Act (ADA)

Surface slip resistance value[4]**:** slip-resistant surface texture

Surface opening[5]**:** Joint openings (3/8") filled with aggregates

Notes
1. Meets and exceeds the requirements of the ASTM C 936 Standard Specification for Solid Concrete Interlocking Paving Units.
2. Surface Infiltration rate measured as per ASTM C 1701.
3. Runoff coefficient values as per ICPI "Permeable Interlocking Concrete Pavements Design Manual, 4th edition".
4. Accessible paths shall be slip resistant. The above mentioned product is considered slip resistant and therefore complies with this ADA design guideline.
5. Accessible paths shall not allow the passage of a sphere greater than 1/2 in. (13 mm) in diameter. Pavers joint openings filled with aggregates comply with this ADA design guideline.

To learn more about the textures and colors for this product, please contact our representatives.

CANADA 5255, rue Albert-Millichamp, Saint-Hubert, QC J3Y 8Z8
USA 852 Pennsylvania Avenue, Pen Argyl, PA 18072
Telephone: 450 656-2992 / Toll free: 1 877 832-4625
Fax: 450 656-1983
www.techo-bloc.com
November 2015

TECHNICAL DATA SHEET

Product name: VICTORIEN 60 mm

Product type: Precast concrete paver

Geometric characteristics

Dimensions (in.): height x width x length (Dimensions include the joint spacer)

2 3/8 x 4 1/4 x 8 1/2 (60 x 108 x 216 mm)

Joint width: 1/8 in. (2.5 mm)

Approximate weight:
Victorien 60 mm: 6.8 lbs (3.08 kg)

Dimensional tolerances[1]
Length and width: ± 1/16 in. (1.6 mm)
Height: ± 1/8 in. (3.2 mm)

Physical characteristics[1]

Compressive strength: 8000 psi (55 MPa) (min)

Freeze-thaw durability
Loss of mass after 50 cycles: 1 % (max)

Water absorption: 5 % (max)

Americans with Disabilities Act (ADA)

Surface slip resistance[2]: slip-resistant surface texture

Surface opening[3]: joint opening size, 1/8 in. (2.5 mm)

Notes
1. Meets and exceeds the requirements of the ASTM C 936 Standard Specification for Solid Concrete Interlocking Paving Units.
2. Accessible paths shall be slip resistant. The above mentioned product is considered slip resistant and therefore complies with this ADA design guideline.
3. Accessible paths shall not allow the passage of a sphere greater than 1/2 in. (13 mm) in diameter. Pavers joint openings filled with joint filler material comply with this ADA design guideline.

To learn more about the textures and colors for this product, please contact our representatives.

CANADA 5255, rue Albert-Millichamp, Saint-Hubert, QC J3Y 8Z8
USA 852 Pennsylvania Avenue, Pen Argyl, PA 18072
Telephone: 450 656-2992 / Toll free: 1 877 832-4625
Fax: 450 656-1983
www.techo-bloc.com

PERMEABLE PAVERS

DRIVEWAYS, PERMEABLE DRIVEWAYS & PATIOS

PHYSICAL AND GEOMETRICAL CHARACTERISTICS - PAVERS

CHARACTERISTICS	CSA A231.2	TECHO-BLOC
Compressive strength	50 MPa [7200 psi] min.	50 MPa [7200 psi] min.
Absorption	-	5 % max.
Freeze-thaw durability with use of de-icing salt	Mass loss (max.): 225 g/m^2 at 28 cycles 500 g/m^2 at 49 cycles	Mass loss (max.): 225 g/m^2 at 28 cycles 500 g/m^2 at 49 cycles
Dimensional tolerance	Length and Width: -1.0 mm [0.039 in.] to +2.0 mm [0.079 in.] Thickness: ±3.0 mm [0.118 in.]	Length and Width: -1.0 mm [0.039 in.] to +2.0 mm [0.079 in.] Thickness: ±3.0 mm [0.118 in.]

Notes : Dimensional tolerances prior to the application of architectural finishes.

Installation guide

TYPICAL APPLICATION USAGE

SECTOR	TRAFFIC TYPE & APPLICATIONS	PERMEABLE PAVERS
RESIDENTIAL	**1. Light traffic** Cars and occasional light service trucks (ex. residential driveways)	- Antika - Blu 80 mm - Inflo - Mista Random - Pure - Valet - Victorien 60 mm permeable - Villagio
	2. Pedestrian Pedestrian only and at all times (ex. patios)	- Antika - Blu 80 mm - Blu 60 mm - Inflo - Mista Random - Pure - Valet - Victorien 60 mm permeable - Villagio
ICI (Industrial, Commercial and Institutional)	**3. Road traffic** Cars, heavy trucks, buses (ex. boulevards, main or secondary streets, pedestrian crossings, industrial, ports and airport areas)	- Inflo
	4. Light traffic Cars and occasional light service trucks (ex. parking lots, sidewalks)	- Inflo - Pure
	5. Pedestrian Pedestrian only and at all times, without cars, or trucks or other mobile equipment (ex. terraces, parks, pedestrian walkways)	- Inflo - Pure

Installation guide

INFILTRATION CHART

PERMEABLE PAVERS	PERCENT OF SURFACE OPENING (%)	JOINT WIDTH (mm)	INFILTRATION RATE[1] (mm/h)
ANTIKA[2]	Variable	Variable	993 in./hr (25 227 mm/hr)
BLU 80 mm[2]	3.0	9/32" (7 mm)	570 in./hr (14 475 mm/hr)
INFLO[1]	5.8	1/2" (13 mm)	837 in./hr (21 267 mm/hr)
MISTA RANDOM[1]	6.3	3/16" (4 mm) to 9/16" (14 mm)	610 in./hr (15 505 mm/hr)
PURE[2]	5.0	3/8" (10 mm)	726 in./hr (18 440 mm/hr)
VALET	5.9	9/32" (7 mm)	to come
VICTORIEN 60 mm PERMEABLE[1]	9.6	3/8" (10 mm)	909 in./hr (23 085 mm/hr)
VILLAGIO[1]	8.0	3/8" (9 mm) to 9/16" (15 mm)	896 in./hr (22 750 mm/hr)
PERMEABLE SLAB	**PERCENT OF SURFACE OPENING (%)**	**JOINT WIDTH (mm)**	**INFILTRATION RATE[1] (mm/h)**
BLU 60 mm[2]	3.0	9/32" (7 mm)	570 in./hr (14 475 mm/hr)

[1] Measurements were taken at various sites in conformity to the standard ASTM C 1701-09.
[2] Measurements were taken at various sites in conformity to the standard ASTM C 1781.

OTHER PERMEABLE POSSIBILITIES

Blu 60 mm SLAB

(page 28 to 33)

Antika PAVER

(page 53)

Blu 80 mm PAVER

(page 54 to 58)

Mista Random PAVER

(page 72)

Valet PAVER

(page 81)

Villagio PAVER

(page 83)

Installation guide

SEGMENTAL PERMEABLE PAVEMENT

INSTALLATION OUTLINE

01 DATA COLLECTION

A. Determine the size, shape, and intended use of finished areas (i.e. residential driveway, secondary commercial parking, etc.).

B. Classify sub-grade soils.

C. Document all existing conditions (i.e. fixed points, existing grades, site contours, etc.).

D. Document soil type, location, and elevation of below grade and overhead utilities both public and private.

E. Ensure public utilities are marked through the use of a locating service.

F. Determine the cross section design of the system based on soil type and application, showing proposed sub-grade and finished grade elevations and all geotextiles and drainage pipes needed for the construction.

G. Establish the type, location, and elevation of relief structures if required (i.e. overflow pipe discharging to rain garden, etc.).

H. Determine the curb or edge restraint type, elevation, and location.

I. Choose a pattern appropriate to the application (traffic type and load).

02 EXCAVATION

A. Before digging, contact the concerned companies if wires or pipes are located in the area to be excavated.

B. Excavation depth is determined from the foundation thickness according to the project specifications (foundation thickness is determined by a qualified engineer based on structural and hydrological analyses).

C. Although the slope of the sub-grade will depend on the drainage design and infiltration type, a minimum slope of 0.5% (1/16" per ft, or 5 mm per meter) is recommended.

D. The distance that the excavated area should extend beyond the area to be paved should be one to 1.5 times the thickness of the foundation. This extra space will ensure the stability of the pavers near the edge and the edge restraints.

E. Level the bottom of the excavated area with a rake.

Compaction will reduce the permeability of the sub-grade and it should be executed according to the project specifications. If compaction is not specified, care should be taken to maintain undisturbed soil infiltration during excavation and construction. Stabilization of the sub-grade may be required with weak, continually saturated soils, or when subject to high traffic conditions. If the compaction or stabilization of sub-grade is necessary, reduced infiltration may require drainage pipes within the sub-base to conform to storm water drainage requirements.

03 GEOTEXTILE, IMPERMEABLE LINERS, AND DRAIN PIPES

A. Use the geotextile specified and install it according to project specifications. The use of a woven geotextile with bi-axel strength that meets design criteria is recommended.

B. Place the geotextile on the bottom and sides of the soil sub-grade. Eliminate wrinkles in the geotextile and ensure it is not damaged during construction.

C. Overlap of geotextile should be a minimum of 2' (600 mm) in the direction of drainage. Overlapping should be "shingle" style with respect to any slope direction and base stone distribution direction. Keep properly tensioned, eliminate wrinkles, and avoid damaging fabric (no spikes).

D. If impermeable liners are required, install them according to project specifications and manufacturer's instructions. Impermeable liners are used when full exfiltration from the reservoir (sub-base and base) into the underlying sub grade is not allowed (no infiltration design). Perforated drainage pipes are usually required in no infiltration and partial infiltration designs.

E. If drainage pipes are required, install them according to project specifications. The aggregate cover over drainage pipes should be at least 12" (300 mm) to protect them from damage during sub-base or base compaction.

Installation guide
SEGMENTAL PERMEABLE PAVEMENT

04 SUB-BASE

For residential pedestrian applications, the sub-base may not be required and then only ASTM No. 57 (CSA 5-28) aggregate base layer with a minimum thickness of 6" (150 mm) can be used (use a thicker base for additional water storage). Refer to Base (see below 06).

When traffic load, soil conditions, and climate require greater than 12" (300 mm) of base or volume requirements for detention are higher, a sub-base may be required. Use sub-base ASTM No. 2 or No. 3 (CSA 40-80) meeting the following requirements:

- 90% fractured symmetrical particles
- Less than 5% passing the 200 sieve
- Industry hardness tested

A. Moisten, spread and compact the ASTM No. 2 (CSA 40-80) aggregate sub-base in minimum 6" (150 mm) lifts (without distorting or damaging the geotextile) according to the project specifications.

B. Make at least two passes in the vibratory mode followed by at least two passes in the static mode with a minimum 10 ton (9 metric ton) vibratory roller, until there is no visible movement of the aggregate. Alternately, a 13,500 lbf (60 kN) plate compactor can be used to compact the ASTM No. 2 (CSA 40-80) aggregate sub-base.

C. Do not allow the compactor to crush the aggregate.

D. Surface tolerance of the ASTM No. 2 (CSA 40-80) sub-base should be ffl 2 ½" (64 mm) over 10' (3 m).

05 EDGE RESTRAINT

A. Install edge restraint according to project specifications.

B. Depending on the design, the top of the edge restraint can be hidden or exposed.

C. Install Avignon, Belgik, Pietra, Tundra or Universal edge units. Cast-in-place concrete or precast concrete curbs should be considered in vehicular use applications (commercial / industrial driveways, parking lots or streets).

D. Edge restraint may rest on an open-graded or dense-graded aggregate base.

06 BASE

A. Moisten, spread and compact the ASTM No. 57 (CSA 5-28) aggregate base layer in one 4" (100 mm) thick lift.

B. Make a minimum of two passes in vibratory mode followed by at least two in static mode with a minimum 10 ton (9 metric ton) vibratory roller, until there is no visible movement of the aggregate. Alternately, a 13,500 lbf (60 kN) plate compactor can be used to compact the ASTM No. 57 (CSA 5-28) aggregate base.

C. Do not allow the compactor to crush the aggregate.

D. Surface tolerance of the ASTM No. 57 (CSA 5-28) base should be ffl 1" (25 mm) over 10' (3 m). Verify prior to setting bed installation.

07 BEDDING COURSE

A. Moisten, spread and screed the ASTM No. 8 (CSA 2.5-10) aggregate bedding layer in one 2" (50 mm) thick lift.

B. Surface tolerance of the ASTM No. 8 (CSA 2.5-10) bedding course should be ffl ⅜" (10 mm) over 10' (3 m).

C. Construction equipment and pedestrian traffic on the screeded bedding course should not be permitted.

08 PAVER

A. Pavers should be placed in the pattern shown on the drawings. Lay units hand tight to designated laying patterns. Units have lugs to maintain consistent joint width.

B. In sloped conditions, it is preferable to start laying from the bottom in an uphill direction.

C. The minimum slope recommended for permeable pavement surface is 1%.

D. Inflo pavers can be installed with the TB100SI (Techo-Bloc mechanical tool) to expedite installation.

E. When subject to vehicular traffic, cut units should not be smaller than ⅓ of a whole paver. When using cut pieces, maintain joint.

F. In vehicular applications, pattern strength will increase if laying pattern is perpendicular to traffic flow.

Installation guide

SEGMENTAL PERMEABLE PAVEMENT

09 JOINT FILL

A. Fill the paver joint openings with ASTM No. 8 (CSA 2.5-10) aggregate (or No. 89, No. 9 depending on joint width). Sweep stone to fill joints. Surface must be swept clean prior to compaction.

B. Compact with a minimum 5,000 lbf (22 kN) plate compactor (two passes minimum). The installation of a neoprene pad is recommended to protect the texture of the paving units.

C. Do not compact within 6' (1.8 m) of unrestrained edges of the pavers.

D. Apply additional aggregate to fill the joint openings if needed and compact.

E. Surface tolerance of compacted pavers should be ffl 3/8" (10 mm) over 10' (3 m).

APPROXIMATE MEASURES

Clean stone quantity in kg (lb) to cover an area of 1 m2 (1 pi^2) to fill between joints.
It is recommended to always start with a small area.

PRODUCTS	JOINT FILL MATERIAL	(lbs/sq. ft)	(kg/sq. m)
Antika	ASTM No. 8 (CSA 2.5 - 10) (1/4")	1.9	9.3
Blu 60 mm	ASTM No. 9 (CSA 2.5 - 5) (1/8")	0.6	3.0
Blu 80 mm	ASTM No. 9 (CSA 2.5 - 5) (1/8")	0.8	4.0
Inflo	ASTM No. 8 (CSA 2.5 - 10) (1/4")	2.1	10.3
Mista random	ASTM No. 9 (CSA 2.5 - 5) (1/8")	1.0	5.0
Pure	ASTM No. 9 (CSA 2.5 - 5) (1/8")	1.4	7.0
Valet	ASTM No. 9 (CSA 2.5 - 5) (1/8")	1.3	6.2
Victorien 60 mm permeable	ASTM No. 9 (CSA 2.5 - 5) (1/8")	1.7	8.5
Villagio	ASTM No. 8 (CSA 2.5 - 10) (1/4")	2.1	10.2

10 POST INSTALLATION PROTECTION

Prevent contamination of the porous (permeable) pavement system from fine aggregates and debris by maintaining erosion and sedimentation (E&S) measures at the perimeter.

Installation guide

SEGMENTAL PERMEABLE PAVEMENT

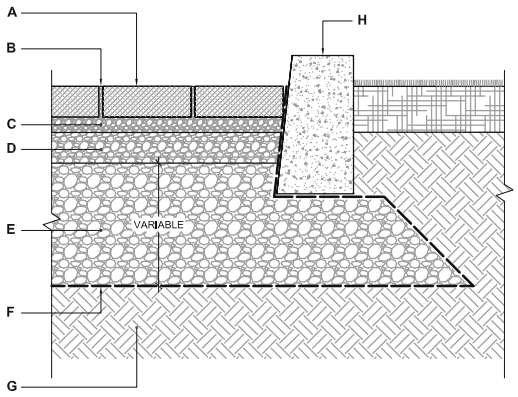

A. PERMEABLE PAVER FROM TECHO-BLOC
B. JOINT FILLING MATERIAL
ASTM No 8 (CSA 2.5-10 mm) AGGREGATE
C. BEDDING COURSE 1½" to 2" (40 to 50 mm)
ASTM No 8 (CSA 2.5-10 mm) AGGREGATE
D. BASE COURSE 4" (100 mm)
ASTM No 57 (CSA 5-28 mm) AGGREGATE
E. SUBBASE COURSE
ASTM No 2 (CSA 40-80 mm) AGGREGATE
F. GEOTEXTILE
G. SUBGRADE
H. CONCRETE EDGE

SEGMENTAL PERMEABLE PAVEMENT – FULL INFILTRATION

Typical cross section

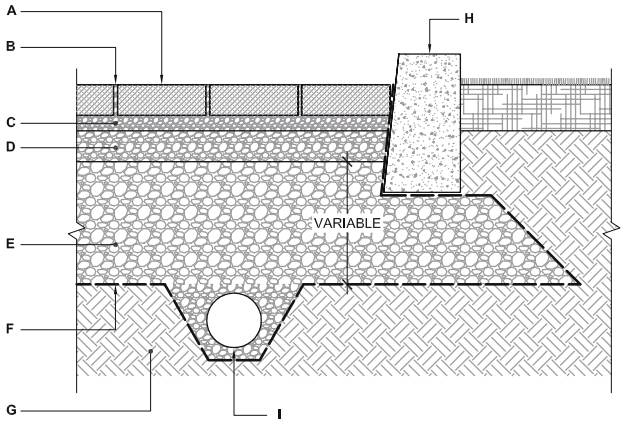

A. PERMEABLE PAVER FROM TECHO-BLOC
B. JOINT FILLING MATERIAL
ASTM No 8 (CSA 2.5-10 mm) AGGREGATE
C. BEDDING COURSE 1½" to 2" (40 to 50 mm)
ASTM No 8 (CSA 2.5-10 mm) AGGREGATE
D. BASE COURSE 4" (100 mm)
ASTM No 57 (CSA 5-28 mm) AGGREGATE
E. SUBBASE COURSE
ASTM No 2 (CSA 40-80 mm) AGGREGATE
F. GEOTEXTILE
G. SUBGRADE
H. CONCRETE EDGE
I. PERFORATED DRAIN CONNECTED TO DRAINAGE SYSTEM

SEGMENTAL PERMEABLE PAVEMENT – PARTIAL INFILTRATION

Typical cross section

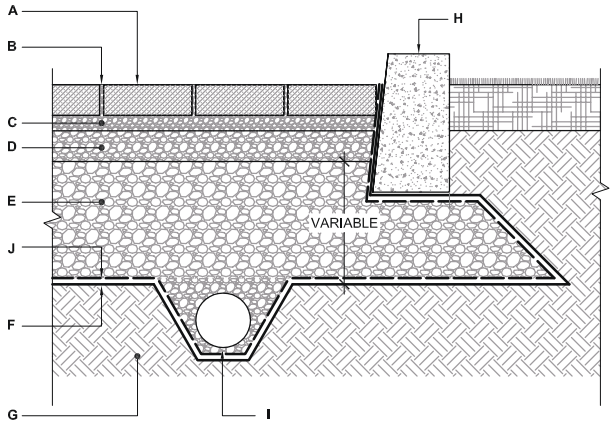

A. PERMEABLE PAVER FROM TECHO-BLOC
B. JOINT FILLING MATERIAL
ASTM No 8 (CSA 2.5-10 mm) AGGREGATE
C. BEDDING COURSE 1½" to 2" (40 to 50 mm)
ASTM No 8 (CSA 2.5-10 mm) AGGREGATE
D. BASE COURSE 4" (100 mm)
ASTM No 57 (CSA 5-28 mm) AGGREGATE
E. SUBBASE COURSE
ASTM No 2 (CSA 40-80 mm) AGGREGATE
F. IMPERMEABLE MEMBRANE
G. SUBGRADE
H. CONCRETE EDGE
I. PERFORATED DRAIN CONNECTED TO DRAINAGE SYSTEM

SEGMENTAL PERMEABLE PAVEMENT – NO INFILTRATION

Typical cross section

Unilock Concrete Pavers:

From Michael Vargason:
For all pavers, we want a dense finish. Washed, Tumbled, or Brushed finish might encourage salt to enter the paver and start to break it down.

Unilock's Eco-Piroria in Granite Blend, Winter Marvel, & Midnight Sky all look like they have a good range of gray shades. Standard, Umbriano, or ENDURACOLOR finishes only. The Ecoline looks like it only comes in a random bundle mix of sizes? We don't want that. If we can get just the 9.375 X 4.5 paver, though, that might work.

Our design team's consensus via emails was that the Unilock Eco Piroria is the best route.

Product Rep Direct Responses to Jeff Questions:

1.) What is the warranty and what does it cover?
Unilock does not have a set commercial warranty on our pavers, however residentially our pavers carry a lifetime guarantee on the structural integrity . Commercially these pavers are made with the same mix design, and standards, and often times far surpass industry standards and guidelines. There are tremendous amount of variables and factors with commercial installations that limit us, such as construction vehicles and other trades working over the pavers before the entire system is installed. Is the owner looking for something particular?

2.) Do you recommend sealing the pavers?
Pavers can be sealed, but do not necessarily need to be sealed. There are a number of different sealers out there that offer a variety of features / benefits. They can be used to help enhance colors, give wet look appearances, and protect the surface of the pavers and some provide a stain resistance. Sealers have a different levels of looks, from semi-gloss, high gloss, natural, & matte finishes. There is even an invisible sealer out there where one would not know the pavers were sealed until the surface is wet and water beads off of the surface. It would be important to note that sealing would provide a certain amount of maintenance that the city would need to re-apply the sealer every few years depending on traffic to ensure a consistent look depending on the wear. Sealing the pavers can help to prolong the look and texture of a paver from wearing. Umbriano does not need to be sealed as it is the Enduracolor manufacturing and has Easy Clean.

3.) Concrete mix design for pavers?
Unilock manufactures paving stones that meet and exceed Industry standards. They are manufactured of a series of a variety Aggregates, Cement, and Iron Oxide Pigments.

<u>ASTM Standard C140</u>
<u>CSA Standard A231.2</u>

- 8000 psi avg.
- 7200 psi min. unit
- 5% absorption avg.
- 7% absorption max.
- Height Tolerance less than +/- 1/8"

Unilock exceeds the industry standards, and our minimums are:

UNILOCK® Standards

- **8500** psi min.
- **4%** absorption avg.
- **5%** absorption max.
- Dimensional Accuracy **+/- 3/64"**

I would double check the clay pavers tolerances, PSI, and absorption rates, as these tend to not be as tight of tolerances.

4.) Any test results for pavers showing resistance to de-icing both chloride and non-chloride?
I have attached test results for Freeze Thaw and Saline, I am checking to see if we have any chloride testing.

There are also different levels of Concrete pavers, from Standard Through Mix, to Enduracolor and Enduracolor plus products. Enduracolor plus products hold up the best to de-icing agents. In the video link below is known as the torture test. This is an enduracolor plus product and standard finish in a muriatic acid bath for 5 minutes. The Enduracolor plus product comes out looking essentially the same, while the standard finish is starting to expose its aggregates. This would be comparable to how concrete pavers would hold up after years of deicing agents and rain exposed to them.

https://youtu.be/hVlJVHb9ARg

5.) Projects sites where they have held up to conditions similar to Burlington over a long period?
We have installations all throughout New England that have been installed for years and are holding up quite well.
University of Massachusetts at Amherst Commonwealth College, This is about 30,000 square feet of Eco Priora 5x10's.
The Town of Sprague, Connecticut, has a series of roadways completely paved with Permeable pavers.
Rhode Island Public Transit Authority in, Providence, Rhode Island, has over an acre of Eco Optiloc that takes bus traffic and heavy loading daily.

All of these projects have been installed for years and have gone through several winters now.

We have done a series of non-permeable installations as well that I could forward along, such as Jiminy Peak, and many of the ski mountains in Vermont as well.

Jeff Hodgson also asked the following question about Unilock products regarding the Montpelier Transit Center they're currently working on:

- I am back to working on the final specifications for the Montpelier Transit Center. Because this project receives federal funding we have to specify 3 products for

everything. Therefore I want to be careful and not price Unilock Pavers out of the running. We have 2 paver types:

- Vehicular / Pedestrian Permeable: I currently have the Ecoline, Random Bundle, Smooth Finish.
- Vehicular / Pedestrian non-permeable: I currently have the Promenade Plank Paver in Smooth finish specified in a herring bone pattern.
- Of course after our discussions on the Burlington Streetscape Standards I would like to specify Enduracolor with Umbriano finish but I imagine that there is a large premium for that?

6.) Project owner references?
I don't have any direct contacts at the permeable installations referenced, but I can reach out and try to get a current contact. I am sure the town could reach out to the owner of Jiminy Peak, as they are doing more work with pavers.

7.) Will Unilock pavers with the special finishes ever run the risk of the finishing layer peeling off?
Unilock's architectural finishes and enduracolor / enduracolor plus offerings are a state of the art manufacturing process, and both the base layer and finish are all done at one manufacturing process. Thankfully, due to our manufacturing standards and processes, de-lamination on our enduracolor and enduracolor plus products is extremely rare, almost never seen.

Please reference the link below to reference the Enduracolor and Enduracolor plus advantages.

https://commercial.unilock.com/superior-manufacturing-technology/

8.) Any best practices that Unilock recommends for maintaining concrete pavers?
I have attached our deicing guidelines, that notes the preferred method would be sodium chloride, followed then by calcium chloride. Magnesium should not be used on concrete pavers. Also for snow removal, if a plow is being used, it should have a neoprene blade, or if it is metal it should be slightly raised. One advantage to permeable pavements is that once the initial snow removal has been completed permeable pavers tend not to have residual icing on the surfaces as all the air circulating under the pavers as well as the open graded joints

9. Cost questions about certain finishes in response to Jeff's question about the Montpelier Transit Center above.

Eric is correct there would be a higher product cost associated with Umbriano finish or enduracolor plus finish, compared to a standard finish or Enduracolor finish (what is currently being looked at). Lifecycle and longevity could be presented to the owner over straight product cost. Umbriano also has what is known as EasyClean, and is almost like a sealer built into the mix design of the paver. This makes the pavers easier to clean, if oils or spills occur, the paver can be cleaned significantly easier than a through mix product.

To circle back to the other finish options mentioned this morning, actually Senzo would most likely come in at a little higher cost than Umbriano, part of that is shipping, as it is manufactured at one of our plants in Canada. The Il Campo is actually only an enduracolor product, while still a nice finish, and holds up well, but does wear slightly different than an Enduracolor Plus

product. Another option that holds up quite well and is slightly less than Umbriano could be the Series 3000 (Exposed Aggregate) finish.

I would think it might be good to specify other pavers with other finishes, and not just standard through mix finish. It would be important to call certain language for each paver, includes sizes, textures, and features. If Umbriano is ultimately picked I would think it would be good for the other manufacturers to provide a sealer that needs to be applied after installation to make cleaning easier.

DAVROC
TESTING LABORATORIES INC.

CONSULTING ENGINEERS •
Materials Testing
and Inspection

File: L17-0267PT

Unilock New York, Inc.
51 International Blvd.
Brewster, NY 10509

August 17, 2017

Attn: Mr. Suede Remington
Suede.Remington@unilock.com

Dear Sir;

Solid Concrete Interlocking Paving Units

Further to receipt of ten (10) approximately 395 mm by 196 mm by 70 mm in size concrete paving units in our laboratory on July 28, 2017, Davroc Testing Laboratories Inc. is pleased to report the results of our tests.

The samples were identified as follows:

Davroc Sample No.:	C1035
Product:	Umbriano
Type:	8 x 16
Colour:	W M
Date Manufactured:	March 9, 2017

Test Procedures

As per your request the paving unit samples were tested for compressive strength and absorption in accordance with ASTM Designation C936 "Standard Specification for Solid Concrete Interlocking Paving Units" following ASTM Designation C140 -14 "Standard Test Methods for Sampling and Testing Concrete Masonry Unit and Related Units", Annex A4, "Test Procedure for Concrete Interlocking Paving Units".

Test Results

The results of our tests are given on the attached table.

Comments

The specimens tested meet the ASTM C936 requirements for compressive strength and water absorption.

Should you have any questions, please do not hesitate to contact the undersigned.

Yours very truly,
Davroc Testing Laboratories Inc.

Kateryna Fiyalko, C.E.T.
Concrete Laboratory Supervisor

Sal Fasullo, C.E.T.
Vice President

Distribution:
Phil.Hardy@unilock.com

SF/my
17-0267-4PT

DAVROC

LABORATORY TESTING OF INTERLOCKING PAVING UNITS

Project No.: L17-0267PT
Manufacturer: Unilock New York Inc.
Date Manufactured: March 9, 2017
Lab No.: C1035

Product: Umbriano
Type: 8 x 16
Colour: W M
Date Tested: August 14, 2017

DAVROC/ CLIENT SPECIMEN NO.	*DIMENSIONS ON SAWN SPECIMEN					*COMPRESSIVE STRENGTH RESULTS ON SAWN SAMPLES				*WATER ABSORPTION & DENSITY TEST RESULTS	
	LENGTH (mm)	WIDTH (mm)	HEIGHT (mm)	HYDRASTONE CAPPED HEIGHT (mm)	HYDRASTONE CAPPING THICKNESS (mm)	CROSS SECTION AREA (mm^2)	ASPECT RATIO	ASPECT RATIO FACTOR	COMPRESSIVE STRENGTH (MPa)	24 HOURS WATER ABSORPTION (%)	DENSITY OVEN DRY (kg/m^3)
C1035-1	-	-	-	-	-	-	-	-	-	3.9	2290
C1035-2	-	-	-	-	-	-	-	-	-	4.0	2275
C1035-3	-	-	-	-	-	-	-	-	-	4.1	2290
C1035-4	-	-	-	-	-	-	-	-	-	4.1	2271
C1035-5	-	-	-	-	-	-	-	-	-	4.2	2267
C1035-6	113.9	113.0	68.0	69.2	0.6	12870.7	0.602	0.990	65.3	-	-
C1035-7	113.7	113.0	68.0	69.4	0.7	12848.1	0.602	0.990	64.3	-	-
C1035-8	113.6	113.3	68.5	68.5	0.5	12870.9	0.605	0.992	66.8	-	-
C1035-9	113.7	113.4	68.8	70.4	0.8	12893.6	0.607	0.995	61.5	-	-
C1035-10	113.8	113.4	68.5	69.7	0.6	12904.9	0.604	0.992	66.0	-	-
Mean	**113.7**	**113.2**	**68.4**	**69.6**	**0.6**	**12877.6**	**0.604**	**0.992**	**64.8**	**4.0**	**2279**
ASTM 936 Specifications	-	-	-		**Max. 1.5 mm**	**Specified Min. Average: 55.0 MPa Specified Min. Individual: 50.0 MPa**				**Max. Average 5 % Max. Individual 7%**	**No Limit**

REMARKS: Unless otherwise noted testing was conducted in accordance with ASTM Designation C936
*Testing was performed in accordance with ASTM C140, unless otherwise noted.

Distribution:

August 17, 2017

Sal Fasullo, C.E.T
Vice-President

ECO-LINE®

Permeable, heavy duty unit pavers have never been so 'on-trend'. With custom finish and color options and the ability to be mechanically installed, this product is not only beautiful, but cost effective.

CUSTOM FINISH OPTIONS

UMBRIANO'
Mottled Finish

SERIES 3000®
Exposed Aggregate Finish

IL CAMPO'
Brushed Finish
Not available in all markets

SMOOTH PREMIER
Finish

CUSTOM COLOR OPTIONS*

PRODUCT SPECIFICATIONS

SPECIAL ORDER
RANDOM BUNDLE

14 x 3 5/16 x 4"
(35.7 x 8.4 x 10cm)

12 1/2x 3 5/16 x 4"
(31.7 x 8.4 x 10cm)

11 x 3 5/16 x 4"
(27.7 x 8.4 x 10cm)

9 3/8 x 3 5/16 x 4"
(23.7 x 8.4 x 10cm)

14 x 4 1/2 x 4"
(35.7 x 11.4 x 10cm)

12 1/2 x 4 1/2 x 4"
(31.7 x 11.4 x 10cm)

11 x 4 1/2 x 4"
(27.7 x 11.4 x 10cm)

9 3/8 x 4 1/2 x 4"
(23.7 x 11.4 x 10cm)

*Eco-Line can be manufactured in a variety of custom colors and textures. Minimum quantities will apply. * Please contact your Unilock Representative for more details*

E

Eco-
vehi

APPLICATION BY SIZE, BY THICKNESS AND PRODUCT

The aspect ratio of the paver unit (length / height = aspect ratio) directly correlates to the recommended usage. A ratio of 3:1 or less is recommended for Commercial and Heavy-Duty Vehicular applications, 4:1 for Residential and Light-Duty Vehicular applications, and over 5:1 for Pedestrian only. Reference the chart below as a guideline and contact your Unilock Representative for more information.

Product	Product Size	Thickness	Pedestrian	Commercial Pedestrian*	Light-Duty Vehicular	Commercial Vehicular	Heavy-Duty	Permeable
	36 x 36	10 cm	✓					
	18 x 36	10 cm	✓					
	24 x 24	15 cm	✓	✓	✓			
	24 x 24	10 cm	✓	✓	✓			
	24 x 24	7 cm	✓					
	24 x 24	5 cm	✓					
	24 x 24	4.5 cm	✓					
	18 x 24	5 cm	✓					
	18 x 24	4.5 cm	✓					
	18 x 18	4.5 cm	✓					
	16 x 24	10 cm	✓	✓	✓**			
	12 x 24	15 cm	✓	✓	✓	✓		
	12 x 24	10 cm	✓	✓	✓**			
	12 x 24	7 cm	✓					
	12 x 24	5 cm	✓					
	12 x 24	4.5 cm	✓					
	8 x 24	15 cm	✓	✓	✓			
	8 x 24	10 cm	✓	✓	✓**			
	6 x 24	15 cm	✓	✓	✓	✓		
	6 x 24	7 cm	✓					
	16 x 16	10 cm	✓	✓	✓	✓		
	16 x 16	8 cm	✓	✓	✓			
	16 x 16	7 cm	✓	✓	✓			
	8 x 16	10 cm	✓	✓	✓	✓		
	8 x 16	7 cm	✓	✓	✓			
	4 x 16	10 cm	✓	✓	✓	✓		
	12 x 12	10 cm	✓	✓	✓	✓		
	12 x 12	8 cm	✓	✓	✓			
	12 x 12	7 cm	✓	✓	✓			
	12 x 12	4.5 cm	✓					
	6 x 12	10 cm	✓		✓	✓	✓	
	6 x 12	8 cm	✓	✓	✓	✓		
	6 x 12	7 cm	✓	✓	✓			
	10 x 10	8 cm	✓	✓	✓	✓		✓
	5 x 10	8 cm	✓	✓	✓	✓	✓	✓
	8 x 8	7 cm	✓	✓	✓	✓		
	6 x 8	7 cm	✓	✓	✓	✓	✓	
	4 x 12	10 cm	✓	✓	✓	✓	✓	
	4 x 12	8 cm	✓	✓	✓			
	4 x 12	7 cm	✓	✓	✓			
	3 x 12	10 cm	✓	✓	✓	✓	✓	✓
	6 x 6	8 cm	✓	✓	✓	✓		
	6 x 6	7 cm	✓	✓	✓	✓		
	5 x 5	8 cm	✓		✓	✓		✓
	4 x 8	8 cm	✓	✓	✓	✓	✓	
	4 x 8	7 cm	✓	✓	✓	✓		
	4 x 8	6 cm	✓	✓	✓			
	4 x 4	7 cm	✓	✓	✓	✓		
	3 x 6	10 cm	✓	✓	✓	✓	✓	
Anchorlock®		8 cm	✓	✓	✓	✓	✓	
Artline™		7 cm	✓					
Artline™		10 cm	✓	✓	✓			
Avante Ashlar™		7 cm	✓	✓	✓			
Bristol Valley™		6 cm	✓					
Brussels Block®		7 cm	✓	✓	✓			
Brussels Dimensional™ Paver		10 cm	✓	✓	✓	✓		
City Park Paver™		7 cm	✓	✓	✓	✓		✓ (8cm)
Copthorne®		6 cm	✓	✓	✓	✓		
Courtstone®		6 cm	✓	✓	✓	✓		
Dura-Mat™		10 cm			✓			✓
Eco-Line™		10 cm	✓	✓	✓	✓	✓	✓
Eco-Optiloc™		8 cm	✓	✓	✓	✓	✓	✓
Mattoni		7cm	✓	✓	✓			
Optiloc®		8 cm	✓	✓	✓	✓	✓	
Richcliff®		6 cm	✓	✓	✓	✓		
Thornbury™		7 cm	✓	✓	✓			✓
Town Hall™		7 cm	✓	✓	✓	✓		✓

All pavements require a site specific design.

UNILOCK RETAINING WALLS

A great retaining wall should provide an **aesthetic that blends** subtly with the environment and **surrounding architectu**
Segmental retaining walls have been the choice of Landscape Architects, Designe and Engineers who are looking for classic clean lines and timeless appeal.

ECO-PRIORA™

This versatile, customizable, permeable unit paver is designed with special spacer bars. The resulting 7mm gap is filled with a clear, fine stone chip that allows the rapid penetration of rainwater into the sub-base and subsoil.

COLORS (Consult your regional Product Data Resource Guide to find locally stocked colors)

CUSTOM FINISH OPTIONS

UMBRIANO®
Mottled Finish

SENZO™
Matte Finish

SERIES 3000®
Exposed Aggregate Finish

IL CAMPO®
Brushed Finish

SMOOTH/PREMIER
Finish

CUSTOM COLOR OPTIONS*

Ask your Unilock Representative about locally stocked colors.

PRODUCT SPECIFICATIONS

10 x 10 x 3 ⅛"

5 x 10 x 3 ⅛"
(12 x 24 x 8cm)

5 x 5 x 3 ⅛"
(12 x 12 x 8cm)

Herringbone bundles available for mechanical installation in select markets. Ask your Unilock Representative for more details.

Unilock® Technical Reference

Topic: Deicing Chemicals

What deicing chemicals does Unilock suggest using?

Preferred: *Sodium Chloride (NaCl)* for temperatures down to +20°F (-7°C). Sodium Chloride is commonly known as rock salt.

Only when necessary: *Calcium Chloride ($CaCl_2$)* can be used for temperature ranges from below +20°F (-7°C) to -2°F (-19°C).

Are there any recommendations for using deicing products?

Follow the directions listed on the deicing product bag. In addition, practice these simple recommendations:

- Use sparingly. Only apply the minimum amount necessary to melt the snow and ice. Over applying the product can still result in damage to concrete.
- Sweep and remove any excess deicing chemical after the ice and snow melts.
- After the winter season, thoroughly wash the paver surface to remove any excess deicing chemical remaining.

Can other types of deicing products be used?

We do not recommend using any other types of deicing chemicals. This includes:

- Magnesium Chloride ($MgCl_2$)
- Calcium Magnesium Acetate (CMA)
- Potassium Chloride (KCl)
- Potassium Acetate (KA)
- Fertilizers containing Ammonium Nitrate and Ammonium Sulfate

The deicing product isn't Sodium Chloride or Calcium Chloride, but the product label says it's safe for concrete. Can this product be used on concrete pavers?

We recommend against using any products other than Sodium Chloride and Calcium Chloride. Our research has found some of the products listed as safe for concrete were incorrect or false and still caused damage to concrete and concrete pavers.

Will Sodium Chloride and Calcium Chloride damage plant material?

Yes, if not used sparingly. Using less of these products will reduce damage to plants.

Other types of deicing chemicals have been used on ready mix concrete sidewalks without damaging the surface. Is this because concrete pavers are not as strong?

Damage may not have occurred because the deicing chemical was applied sparingly or perhaps the damage is not yet visible. All concrete materials are susceptible to damage from deicing chemicals no matter how the concrete product is produced. Generally speaking, concrete pavers are two to three times stronger than pour-in-place ready mix type concrete in terms of pounds per square inch strength and have lower absorption rates.

ECO-PRIORA™ - AVAILABLE IN LOS ANGELES, CALIFORNIA

Architectural design with engineered performance.

Available in multiple shapes, this new permeable paver is also produced using face-mix technology that will increase the durability of the product and provide better color retention. Custom colors and finishes are available to offer unlimited design possibilities. Combined with a surface infiltration rate of up to 140 inches per hour, Eco-Priora offers both aesthetics and performance.

HERITAGE BROWN
(SPECIAL ORDER)

RIVER (SRI 34)
STANDARD FINISH

SIERRA
STANDARD FINISH

SIERRA
ANTIQUED FINISH
AVAILABLE IN 5" X 10" ONLY

RIVER
ANTIQUED FINISH
NEW FOR 2016
AVAILABLE IN 5" X 10" ONLY

Special Order Colors

BEECHWOOD
STANDARD FINISH
NOT ENDURACOLOR

COFFEE CREEK
STANDARD FINISH

COFFEE CREEK
TUMBLED FINISH
SPECIAL ORDER

GRANITE BLEND
STANDARD FINISH

GRANITE BLEND
TUMBLED FINISH
SPECIAL ORDER

SIERRA
TUMBLED
SPECIAL ORDER

AUTUMN SUNSET
UMBRIANO FINISH
SPECIAL ORDER

MIDNIGHT SKY
UMBRIANO FINISH
SPECIAL ORDER

SUMMER WHEAT
UMBRIANO FINISH
SPECIAL ORDER

WINTER MARVEL
UMBRIANO FINISH
SPECIAL ORDER

RIVER (SRI 34)
STANDARD FINISH

HERITAGE BROWN
IL CAMPO FINISH
SPECIAL ORDER

SIERRA
IL CAMPO FINISH
SPECIAL ORDER

HERITAGE BROWN
IL CAMPO FINISH

SANTA FE
IL CAMPO FINISH

OPAL BLEND

STEEL GREY BLEND

Minimum quantities and special pricing may apply. Contact us for more details.

With so many different options for customization we ask that you contact your local Unilock Representative for more information about customizing this product.

Minimum quantities will apply.

10 X 10
24 CM X 24 CM X 8 CM
9.5" X 9.5" X 3.125"

5 X 10
24 CM X 12 CM X 8 CM
9.5" X 4.75" X 3.125"

5 X 10 HERRINGBONE
SPECIAL ORDER
24 CM X 12 CM X 8 CM
9.5" X 4.75" X 3.125"

Special Order Shapes & Sizes

10 X 10
24 CM X 24 CM X 8 CM
9.5" X 9.5" X 3.125"

5 X 10
24 CM X 12 CM X 8 CM
9.5" X 4.75" X 3.125"

5 X 10
SPECIAL ORDER
24 CM X 12 CM X 8 CM
9.5" X 4.75" X 3.125"

5 X 5
12 CM X 12 CM X 8 CM
4.75" X 4.75" X 3.125"

Minimum quantities and special pricing may apply. Contact us for more details.

	Unit Thickness	Sq. Ft. Bndl.	Sq. Ft. Layer	Sq. Ft. Stone	Layers Bndl.	Ln Ft Sec. Soldier	Ln Ft Bndl. Soldier	Sq Ft Ln Ft Soldier	Ln Ft Sec. Sailor	Ln Ft Bndl. Sailor	Sq Ft Ln Ft Sailor	Units Sq. Ft.	Lbs Bndl.	Lbs Sec.	Units Bndl.
10 x 10	8	86.6	12.37	-	7	-	110.24	0.79	-	-	0.79	1.61	3098.55	-	140
5 x 10	8	74.59	10.66	-	7	-	96.46	0.77	-	-	0.39	3.28	2668.83	-	245
5 x 10 Herringbone Special Order	8	74.59	10.66	-	7	-	98.03	0.76	-	-	-	3.34	2668.83	-	249

Special Order - Lead Time Required. Minimum quantities apply. Sold in full bundles only and is shipped on a refundable skid. Eco-Priora™ can be manufactured in a variety of custom colors and textures. Specially graded aggregates must be used for the joints. Contact Unilock for information.

All measurements are nominal.

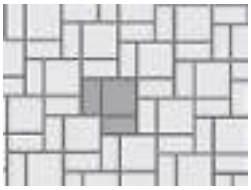

Pattern H

50% 5x10
50% 10x10

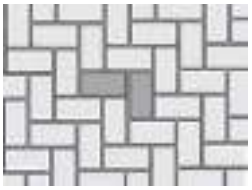

Pattern E

100% 5x10

Eco-Priora™ River, 34

Permeable

Hybrid Document

View Download

View Download

Also available on CADdetails

32-14-13

Unilock Permeable 2015

For any additional information or assistance with this spec please contact your Unilock Representative.

****** Delete all text in RED after modifying the text in BLUE. All BLUE text requires modification. ******

FOREWORD

These specifications have been prepared for the general guidance of architects, engineers, contractor and superintendents associated with the construction of permeable interlocking concrete pavements. Consult with a qualified engineer to determine the suitability of the design, confirm site conditions and monitor the installation in critical applications.

INTRODUCTION

Unilock® permeable pavers are manufactured in a variety of shapes and colors for residential, commercial, municipal and industrial applications. They offer design professionals several engineered pavement systems that are efficient, durable, economical and aesthetically attractive.

Unilock® permeable pavers are manufactured to tight dimensional tolerances. This, in combination with their permeable and interlocking capabilities, allows the surface to be completely porous with a high resistance to compressive loads and lateral forces.

SECTION 32 14 13.19

PERMEABLE CONCRETE PAVER MATERIALS

PART 1 GENERAL

1.01 SUMMARY

A. Section includes the following:
1. Permeable Concrete Pavers
2. Permeable Joint Opening Aggregate
3. Permeable Joint Aggregate Type 1
4. Permeable Joint Aggregate Type 2
5. Permeable Setting Bed Aggregate (Open-graded)
6. Permeable Base Aggregate (Open-graded)
7. Permeable Subbase Aggregate (Open-graded)

1.02 REFERENCES

Note: Design street, industrial, port and airport pavement thicknesses in consultation with a qualified civil engineer, in accordance with established flexible pavement design procedures, LOCKPAVE® software, and in accordance with Interlocking Concrete Pavement Institute Technical Bulletins. Sample construction detail drawings are available from Unilock®. This specification may require modifications.

A. ASTM International, latest edition:
1. C 29 Bulk Density and Voids in Aggregate Materials.
2. C 33, Standard Specification for Concrete Aggregates.
3. C 67, Standard Test Methods for Sampling and Testing Brick and Structural Clay Tile, Section 8, Freezing and Thawing.
4. C 136, Standard Test Method for Sieve Analysis of Fine and Coarse Aggregates.
5. C 140, Standard Test Methods for Sampling and Testing Concrete Masonry Units and Related Units.
6. C 144 Standard Specifications for Aggregate for Masonry Mortar.
7. D 448, Standard Classification for Sizes of Aggregate for Road and Bridge Construction.
8. C 936, Standard Specification for Solid Concrete Interlocking Paving Units.
9. C 979, Standard Specification for Pigments for Integrally Colored Concrete.

10. D 698 Test Methods for Moisture Density Relations of Soil and Soil Aggregate Mixtures Using a 5.5 lb (24.4 N) Rammer and 12 in. (305 mm) drop.
11. D 1557 Test Methods for Moisture Density Relations of Soil and Soil Aggregate Mixtures Using a 10-lb (44.5 N) Rammer and 18 in. (457 mm) drop.
12. C1645 Standard Test Method for Freeze-thaw and De-icing Salt Durability of Solid Concrete Interlocking Paving Units
13. D 1883, Test Method for California Bearing Ratio of Laboratory-Compacted Soils.
14. D 2940 Graded Aggregate Material for Bases or Subbases for Highways or Airports.
15. D 4254, Standard Test Methods for Minimum Index Density and Unit Weight of Soils and Calculation of Relative Density.
16. D 5261, Standard Test Method for Measuring Mass per Unit Area of Geotextiles
17. D 4632, Standard Test Method for Grab Breaking Load and Elongation of Geotextiles
18. D 4533, Standard Test Method for Index Trapezoidal Tearing Strength of Geotextiles
19. D 4833, Standard Test Method for Index Puncture Resistance of Geotextiles, Geomembranes and Related Products
20. D 4491, Standard Test Method for Water Permeability of Geotextiles by Permittivity
21. D 4751, Standard Test Method for Determining Apparent Opening Size of a Geotextile
22. D 4354, Standard Practice for Sampling of Geosynthetics for Testing
23. D 4759, Standard Practice for Determining the Specifications Conformance of Geosynthetics

Delete the BLUE text above if no geotextile is being utilized.

Note: In order to determine the latest version of the listed specifications and standards, please consult the ASTM web page (www.astm.com)

B. U.S. Green Building Council Leadership in Energy and Environmental Design (LEED)
   1. Building Design + Construction, latest edition

1.03 SUBMITTALS

A. Permeable Concrete Pavers:
   1. Samples for verification: Three representative full-size samples of each paver type, thickness, color and finish that indicate the range of color variation and texture expected upon project completion.
   2. Accepted samples become the standard of acceptance for the product produced.
   3. Test results from an independent testing laboratory for compliance of concrete pavers with ASTM C 936.
   4. Manufacturer's catalog product data, installation instructions, and material safety data sheets for the safe handling of the specified materials and products.

B. Permeable Joint Opening Aggregate:
   1. Provide three representative one pound samples in containers of aggregate materials that indicate the range of color variation and texture expected upon project completion.
   2. Accepted samples become the standard of acceptance for the product produced.
   3. Test results from an independent testing laboratory for sieve analysis, including washed gradations per ASTM C 136.
   4. Test results for void space percentage per ASTM C 29.

C. Permeable Setting Bed, Base and Subbase Aggregate:
   1. Test results from an independent testing laboratory for compliance with ASTM D 448 No. 8, No. 57 and No. 2.
   2. Test results from an independent testing laboratory for sieve analysis, including washed gradations per ASTM C 136.
   3. Test results for void space percentage per ASTM C 29.

D. Paving Installation Contractor:

1. Job references from a minimum of three projects similar in size and complexity. Provide Owner/Client/General Contractor names, postal address, phone, fax, and email address.

E. LEED (required only for LEED projects, delete otherwise)
1. LEED Materials and Resources Credit 4, Recycled Materials: Submit letter from manufacturer certifying the products having recycled content, documentation indicating percentages by weight of post-consumer and pre-consumer recycled content.
   a. Include statement indicating costs for each product having recycled content.
2. LEED Materials and Resources Credit 5, Regional Materials: Submit letter from manufacturer certifying products having been extracted, harvested, or recovered, as well as manufactured within 500 miles of the project site.
   a. Include a statement indicating the percentage by weight which is extracted, harvested, or recovered within 500 miles of the project site.
3. LEED Sustainable Sites Credit 7.1, Non-roof: Submit letter from manufacturer certifying the solar reflectance index (SRI) of the paver is 29 or greater.

1.04 QUALITY ASSURANCE

A. Utilize a Manufacturer having at least ten years of experience manufacturing interlocking concrete pavers on projects of similar nature or project size.

B: Source Limitations:
1. Obtain Permeable Concrete Pavers from one source location with the resources to provide products of consistent quality in appearance and physical properties.
2. Obtain Permeable Joint Opening Aggregate from one source with the resources to provide materials and products of consistent quality in appearance and physical properties.

C. Paving Contractor Qualifications:
1. Utilize an installer having successfully completed concrete paver installation similar in design, material, and extent indicated on this project.

D. Mockups:
1. Install a 5 ft x 5 ft paver area.
2. Use this area to determine joint sizes, lines, laying pattern(s) and levelness. This area will serve as the standard by which the workmanship will be judged.
3. Subject to acceptance by owner, mock-up may be retained as part of finished work.
4. If mock-up is not retained, haul offsite and dispose legally.

1.05 DELIVERY, STORAGE & HANDLING

A. In accordance with Conditions of the Contract and Division 1 Product Requirement Section. (Modify this to match the general conditions of the specific project)

B. Deliver Permeable Concrete Pavers in manufacturer's original, unopened and undamaged container packaging with identification labels intact.
1. Coordinate delivery and paving schedule to minimize interference with normal use of streets and sidewalks adjacent to paver installation.
2. Deliver concrete pavers to the site in steel banded, plastic banded or plastic wrapped packaging capable of transfer by forklift or clamp lift.
3. Unload pavers at job site in such a manner that no damage occurs to the product or adjacent surfaces.

C. Store and protect materials free from mud, dirt and other foreign materials.

1.06 PROJECT/SITE CONDITIONS

A. Environmental Requirements:
1. Install permeable pavers only on unfrozen permeable setting bed aggregate materials.
2. Install permeable setting bed only on unfrozen permeable base and subbase aggregates.
3. Install permeable base or subbase aggregates only over unfrozen subgrade.

1.07 PERMEABLE CONCRETE PAVER OVERAGE AND ATTIC STOCK

A. Provide a minimum of 5% additional material for overage to be used during construction.

B. Furnish 100 square feet of each product and size used to owner for maintenance and repair. Furnish Permeable Concrete Pavers from the same production run as installed materials.

C. Manufacture to supply maintenance and reinstatement manuals for Permeable Concrete Paver units.

1.08 LEED REQUIREMENTS (required only for LEED projects, delete otherwise)

A. Add any specific requirements necessary for achieving desired credits.

PART 2 PRODUCTS

2.01 PERMEABLE CONCRETE PAVERS

A. Basis-of-Design Product: The permeable concrete paver shapes are based on:

1. Unilock: (Select product or products being used)
   a. Eco-Optiloc
   b. Eco-Priora
   c. Ecoloc
   d. Eco-Stone
   e. Town Hall
2. As manufactured by:
   Unilock (Add location)
   Address
   City, State and Zip
   Contact: (insert Unilock representative name and phone number) or your local Territory Manager
3. The specified products establish minimum requirements that substitutions must meet to be considered acceptable.
   a. To obtain acceptance of unspecified products, submit written requests at least 7 days before the Bid Date.

Note: Unless required by the owner, an “or equal” line is not necessary when using a basis-of-design specification with the above information is listed and outline in Division 1, Product Substitution Procedures.

Or choose number 3 below and delete above number 3.

3. Substitutions: No substitutions permitted.

B. Product requirements:

1. Permeable Paver Type 1: Unilock Eco-Optiloc (or other Unilock product name)
   a. Color: Insert product color
   b. Finish: (Select finish type from below and insert here. Finish type will affect product pricing).
      1. Standard – this is not a face mix finish.
      2. Smooth (Premier) – this is a face mix finish.
      3. Brushed (IL Campo) – this is a face mix finish.
      4. Exposed Granite (Series 3000) – this is a face mix finish.
      5. Granite appearance (Umbriano) – this is a face mix finish.
      6. Tile appearance (Belpasso) – this is a face mix finish.
      7. TX Active photocatalytic cement – this is a face mix finish.
   c. Edge: Chamfer - 3 mm bevel
   d. Size: Manufacture the sizes indicated with a maximum tolerance of plus or minus 1/16 in all directions.
      1. L-shape
      Note: Imperial dimensions are nominal equivalents to the metric dimensions.
2. Permeable Paver Type 2: Unilock Eco-Priora (or other Unilock product name)

a. Color: Insert product color
b. Finish: (Select finish type from below and insert here. Finish type will affect product pricing).
   1. Standard – this is not a face mix finish.
   2. Smooth (Premier) – this is a face mix finish.
   3. Brushed (IL Campo) – this is a face mix finish.
   4. Exposed Granite (Series 3000) – this is a face mix finish.
   5. Granite appearance (Umbriano) – this is a face mix finish.
   6. Tile appearance (Belpasso) – this is a face mix finish.
   7. TX Active photocatalytic cement – this is a face mix finish either Premier or Brushed.
c. Edge: Chamfer - 3 mm rolled
d. Size: Manufacture the sizes indicated with a maximum tolerance of plus or minus 1/16 in all directions.
   1. 120 mm (5 in) x 120 mm (5 in) x 80 mm (3-1/8 in) thick
   2. 120 mm (5 in) x 240 mm (10 in) x 80 mm (3-1/8 in) thick
   3. 240 mm (10 in) x 240 mm (10 in) x 80 mm (3-1/8 in) thick

   Note: Imperial dimensions are nominal equivalents to the metric dimensions.

3. Permeable Paver Type 3: Town Hall (or other Unilock product name)
   a. Color: Insert product color(s): Burgundy Red, Burnt Clay, Old Oak
   b. Finish: Streetpaver appearance
   d. Size: Manufacture the sizes indicated with a maximum tolerance of plus or minus 1/16 in all directions.
      1. 10 cm (4 in) x 25 cm (9-3/4 in) x 7 cm (2-3/4 in) thick
4. (Insert additional Permeable Paver Types here as necessary or delete this line)

C. Provide pavers meeting the minimum material and physical properties set forth in ASTM C 936, Standard Specification for Interlocking Concrete Paving Units. Efflorescence is not a cause for rejection.
   1. Average compressive strength 8000 psi (55MPa) with no individual unit under 7,200 psi (50 MPa).
   2. Average absorption of 5% with no unit greater than 7% when tested according to ASTM C 140.
   3. Resistance to 50 freeze-thaw cycles, when tested according to ASTM C1645, with no breakage greater than 1.0% loss in dry weight of any individual unit. Conduct this test method not more than 12 months prior to delivery of units.

   Note: Efflorescence is a whitish powder-like deposit that sometimes appears on concrete products. Calcium hydroxide and other water-soluble materials form or are present during the hydration of Portland cement. Pore water becomes saturated with these materials, and diffuses to the surface of the concrete. When this water evaporates, the soluble materials remain as a whitish deposit on the concrete surface. The calcium hydroxide is converted to calcium carbonate during a reaction with carbon dioxide from the atmosphere. The calcium carbonate is difficult to remove with water. However, the efflorescence will wear off with time, and it is advisable to wait a few months before attempting to remove any efflorescence. Commercially available cleaners can be used, provided directions are carefully followed. Some cleaners contain acids that may alter the color of the pavers.

D. Accept only pigments in concrete pavers conforming to ASTM C 979.
   Note: ACI Report No. 212.3R provides guidance on the use of pigments.

E. Maximum allowable breakage of product is 5%.

F. TX Active is a Portland Cement (white) Type I, II, and III complying with ASTM C 150 with the addition of proprietary particles of titanium dioxide (TiO2) specifically engineered for use in the manufacture of concrete and concrete products.
   1. TX Active - Self-cleaning and pollution reduction
      - Concrete will resist most organic and inorganic pollutants that gather on the surface causing discoloration.

- Concrete will remove significant amounts of environmental pollutants deemed harmful to human health.

2. As manufactured by ESSROC Italcementi Group.
   a. Unilock Chicago is an authorized producer of TX Active products.

NOTE: CONTACT YOUR LOCAL UNILOCK COMMERCIAL PRODUCT REPRESENTATIVE PRIOR TO SPECIFYING TX ACTIVE CEMENT.

2.02 PERMEABLE JOINT OPENING AGGREGATE

A. Provide Permeable Joint Opening Aggregate materials conforming to ASTM C 33 and gradation requirements of ASTM D 448 No. 8 as shown in Table 1. Unilock recommends using granite chips listed in table 2 below for vehicular areas with heavy traffic loads such as roadways or drive-through areas.

TABLE 1 - ECO-OPTILOC
PERMEABLE JOINT OPENING AGGREGATE
GRADATION REQUIREMENTS
(CRUSHED LIMESTONE)

ASTM No. 8	
Sieve Size	**Percent Passing**
1/2 in (12.5 mm)	100
3/8 in (9.5 mm)	85 to 100
No. 4 (4.75 mm)	10 to 30
No. 8 (2.36 mm)	0 to 10
No. 16 (1.18 mm)	0 to 5

B. Provide Permeable Joint Opening Aggregate materials conforming to ASTM C 33 and gradation requirements as presented in Table 2.
   1. Supplier:
      a. Kafka Granite LLC, 101 S. Weber Ave, Stratford, WI 54484 – Toll Free: 800-852-7415
      b. Alliance Aqua-Roc
      c. SEK Perm Chip
   2. Color: (Specify granite chip color if other than crushed limestone)

TABLE 2 - ECO-PRIORA & TOWN HALL
PERMEABLE JOINT OPENING AGGREGATE
GRADATION REQUIREMENTS
(GRANITE CHIPS)

1/8 to 3/16 inch granite chips	
Sieve Size	**Percent Passing**
1/4 in (6 mm)	97 to 100
No. 4 (4.75 mm)	70 to 83
No. 8 (2.36 mm)	37 to 50
No. 16 (1.18 mm)	0 to 12
pan	

2.03 PERMEABLE SETTING BED AGGREGATE

A. Provide Permeable Setting Bed Aggregate materials conforming to ASTM C 33 and gradation requirements of ASTM D 448 No. 8 as presented in Table 3.

TABLE 3
PERMEABLE SETTING BED AGGREGATE
GRADATION REQUIREMENTS

ASTM No. 8	
Sieve Size	**Percent Passing**
½ in (12.5 mm)	100
3/8 in (9.5 mm)	85 to 100
No. 4 (4.75 mm)	10 to 30
No. 8 (2.36 mm)	0 to 10
No. 16 (1.18 mm)	0 to 5

2.04 PERMEABLE BASE AGGREGATE

A. Provide Permeable Base Aggregate materials conforming to ASTM C 33 and gradation requirements of ASTM D 448 No. 57 as presented in Table 4.

TABLE 4
PERMEABLE BASE AGGREGATE
GRADATION REQUIREMENTS

ASTM No. 57	
Sieve Size	**Percent Passing**
1-1/2 in (37.5 mm)	100
1 in (25 mm)	95 to 100
1/2 in (12.5 mm)	25 to 60
No. 4 (4.75 mm)	0 to 10
No. 8 (2.36 mm)	0 to 5

2.05 PERMEABLE SUBBASE AGGREGATE

A. Provide Permeable Subbase Aggregate materials conforming to ASTM C 33 and gradation requirements of ASTM D 448 No. 2 as presented in Table 5.

TABLE 5
PERMEABLE SUBBASE AGGREGATE
GRADATION REQUIREMENTS

ASTM No. 2	
Sieve Size	**Percent Passing**
3 in (75 mm)	100
2-1/2 in (63 mm)	90 to 100
2 in (50 mm)	35 to 70
1-1/2 in (37.5 mm)	0 to 15
3/4 (19 mm)	0 to 5

Note: For all aggregates, provide washed, clean, have zero plasticity, free from deleterious or foreign matter, crushed, angular rock and contain no No. 200 sieve size aggregate materials used in the construction of permeable pavement. Aggregate materials serve as the structural load bearing platform of the pavement as well as a temporary receptor for the infiltrated water that is collected through the openings in the pavement's surface.

2.06 GEOTEXTILE (Optional depending on soil conditions)

A. Provide Geotextile material conforming to the following performance characteristics, measured per the test methods referenced:
   1. 4 oz., nonwoven needle punched geotextile composed of 100% polypropylene staple fibers that are inert to biological degradation and resists naturally encountered chemicals, alkalis, and acids.
   2. Grab Tensile Strength: ASTM D 4632: 115 lbs.
   3. Grab Tensile Elongation: ASTM D 4632: 50%
   4. Trapezoidal Tear: ASTM D4533: 50 lbs.
   5. Puncture: ASTM D4833: 65 lbs.
   6. Apparent Opening Size: ASTM D 4751: 0.212 mm, 70 U.S. Sieve
   7. Permittivity: ASTM D 4491: 2.0 sec -1
   8. Flow Rate: ASTM D 4491: 140 gal/min/s.f.

B. As supplied by Unilock (add location, address, City, State and Zip)
   Contact: (Insert Unilock representative name and phone number) or your local Territory Manager
   1. Carthage Mills – FX-40HS
   2. U.S. Fabrics – US 115NW
   3. Mirafi – 140N

2.07 EDGE RESTRAINTS

A. Concrete Edge Restraint as indicated.

B. Plastic and Metal Edge Restraints:
   1. Permaloc, www.permaloc.com
      a. Material Type: Aluminum
      b. Model No.: 3 inch GeoEdge capture plate and geogrid
   2. SEK Surebond
      a. Model No.: 8 feet PermEdge with attached geogrid

Note: The provision of suitable edge restraints is critical to the satisfactory performance of interlocking concrete block pavement. Abut pavers tightly against the restraints to prevent rotation under load and any consequent spreading of joints. Install sufficiently stable edge restraints that are, in addition to providing suitable edge support for the paver units, able to withstand the impact of temperature changes, vehicular traffic and/or snow removal equipment.

Curbs, gutters or curbed gutter, constructed to the dimensions of municipal standards (noting that these standards generally refer to cast-in-place concrete sections), are considered to be acceptable edge restraints for heavy duty installations. Where extremely heavy industrial equipment is involved such as container handling equipment, review the flexural strength of the edge restraint carefully particularly if a section that is flush with the surface is used and may be subjected to high point loading.

2.08 ACCESSORIES (Optional depending on project needs)

A. [Cleaners] [Sealers]
   1. Supplier: Unilock (add location, address, City, State and Zip)
      Contact: (Insert Unilock representative name and phone number) or your local Territory Manager
   2. Material Type and Description: (Specify material type and description)
   3. Material Standard: (Specify material standard)

   Note: Generally sealing permeable pavers for utilitarian uses such as parking lots is not necessary. Consult with your product representative prior to specifying or remove section 2.08 Accessories.

PART 3 EXECUTION

3.01 EXAMINATION

A. Examine areas indicated to receive paving for compliance with requirements for installation tolerances and other conditions affecting performance for the following items before placing the Permeable Concrete Pavers.

1. Verify that subgrade preparation, compacted density and elevations conform to specified requirements.
2. Verify that Geotextiles, if applicable, have been placed according to drawings and specifications.
3. Verify that Permeable Base and Subbase Aggregate materials, thickness, compacted density, surface tolerances and elevations conform to specified requirements.
4. Provide written density test results for soil subgrade, Permeable Base and Subbase Aggregate materials to the Owner, General Contractor and paver installation subcontractor.
5. Verify location, type, and elevations of edge restraints, concrete collars around utility structures, and drainage inlets.

B. Proceed with installation only after unsatisfactory conditions have been corrected.

1. Beginning of bedding sand and paver installation signifies acceptance of base and edge restraints.

3.02 PREPARATION

A. Verify that the subgrade soil is free from standing water.

B. Stockpile Permeable Setting Bed, Joint, Base and Subbase Aggregate materials such that they are free from standing water, uniformly graded, free of any organic material or sediment, debris, and ready for placement.

C. Remove any excess thickness of soil applied over the excavated soil subgrade to trap sediment from adjacent construction activities before placing the Geotextile and Permeable Subbase Aggregate materials.

D. Keep area where pavement is to be constructed free from sediment during entire job. Remove and replace all Geotextile, Permeable Joint, Setting Bed, Base and Subbase Aggregate materials contaminated with sediment with clean materials.

E. Complete all subdrainage of underground services within the pavement area in conjunction with subgrade preparation and before the commencement of Permeable Subbase Aggregate construction.

F. Prevent damage to underdrain pipes, overflow pipes, observation wells, or inlets and other drainage appurtenances during installation. Report all damage immediately.

G. Compact soil subgrade uniformly to at least 90 percent of Standard Proctor Density per ASTM D 698 for pedestrian areas. Compact soil subgrade uniformly to at least 95 percent Modified Proctor per ASTM D 1557 for vehicular areas.

H. Proof-roll prepared subgrade according to requirements in Division 31 Section "Earth Moving" to identify soft pockets and areas of excess yielding. Excavate soft spots, unsatisfactory soils, and areas of excessive pumping or rutting and replace with compacted backfill or fill as directed.

Note: Base compaction and proof-rolling of the subgrade soil on the recommendations of the Design Engineer. Request the Architect/Engineer to inspect subgrade preparations, elevations and conduct density tests for conformance to specifications.

Note: Mechanical tampers (jumping jacks) are recommended for compaction of soil subgrade and aggregate base around lamp standards, utility structures, building edges, curbs, tree wells and other protrusions. Compact areas, not accessible to roller compaction equipment, to the specified density with mechanical tampers. **CAUTION** – Proceed with care around the perimeters of excavations, buildings, curbs, etc. These areas are especially prone to consolidation and settlement. Do not place wedges of backfill in these

areas. If possible particularly in these areas, proceed with backfilling and compacting in shallow lifts, parallel to the finished surface.

3.03 INSTALLATION

A. EDGE RESTRAINTS

1. Provide edge restraints as indicated.
   a. Install job-built concrete edge restraints to comply with requirements in Division 3 Section "Cast-in-Place Concrete." (Add section number and match specification name)
   b. Provide concrete edge restraint along the perimeter of all paving as specified. Install the face of the concrete edge restraint, where it abuts pavers vertical down to the subbase.
   c. Construct concrete edge restraint to dimensions and level specified and support on a compacted subbase not less than 6 in (150 mm) thick.
2. Provide plastic or metal edge restraints as indicated. (Delete if not being used).
   a. Provide plastic or metal edge restraints along the perimeter of all paving as indicated and supported on a minimum of 6 inches (150 mm) of Base Aggregate.
   b. Provide 10” spiral galvanized or stainless steel spike to fasten plastic edge restraint at 24 inches on center for straight sections and 12 inches on center for curved sections.

B. GEOTEXTILES (Delete if not being used).

1. Provide separation geotextile on bottom and sides of prepared soil subgrade. Secure in place to prevent wrinkling or folding from equipment tires and tracks.
2. Overlap ends and edges a minimum of 18 in. (450 mm) in the direction of drainage.

C. PERMEABLE BASE AND SUBBASE AGGREGATE

1. Provide the Permeable Subbase Aggregate in uniform lifts not exceeding 6 in., (150 mm) loose thickness and compact to at least 95 percent as per ASTM D 4254 to depths as indicated.
2. Compact the Permeable Subbase Aggregate material with at least two passes in the vibratory mode then at least two in the static mode with a minimum 10 ton vibratory roller until there is no visible movement. Do not crush aggregate with the roller.
3. Tolerance: Do not exceed the specified surface grade of the compacted Permeable Subbase Aggregate material more than ±3/4 in. (20 mm) over a 10 ft. (3 m) long straightedge laid in any direction.
4. Provide the Permeable Base Aggregate material in uniform lifts not exceeding 6 in. (150 mm) over the compacted Permeable Subbase Aggregate material and compact to at least 95 percent as per ASTM D 4254 to depths as indicated.
5. Compact the Permeable Base Aggregate material with at least two passes in the vibratory mode then at least two in the static mode with a minimum 10 ton vibratory roller until there is no visible movement. Do not crush aggregate with the compaction device.
6. Tolerance: Do not exceed the specified surface grade of the compacted Permeable Base Aggregate material more than ±1/2 in. (13 mm) over a 10 ft. (3 m) long straightedge laid in any direction.
7. Grade and compact the upper surface of the Permeable Base Aggregate material sufficiently to prevent infiltration of the Permeable Setting Bed Aggregate material both during construction and throughout its service life.

Note: In-place density of the Permeable Base and Subbase Aggregate materials may be checked per ASTM D 4254. Establish a Compacted density of 95% of the laboratory index density for the subbase and base stone.

D. PERMEABLE SETTING BED AGGREGATE

1. Provide and spread Permeable Setting Bed aggregate evenly over the Permeable Base Aggregate course and screed to a nominal thickness of 1-1/2 in. (40 mm).
   a. Protect screeded Permeable Setting Bed Aggregate from being disturbed.

b. Screed only the area which can be covered by pavers in one day.
c. Do not use Permeable Setting Bed Aggregate material to fill depressions in the base surface.

2. Keep moisture content constant and density loose and constant until Concrete Pavers are set and compacted.
3. Inspect the Permeable Setting Bed Aggregate course prior to commencing the placement of the permeable concrete pavers.
4. Inspect the Setting Bed Aggregate course prior to commencing the placement of the Permeable Concrete Pavers. Acceptance of the Setting Bed Aggregate occurs with the initiation of Permeable Concrete Paver placement.

E. PERMEABLE CONCRETE PAVERS

1. Replace unit pavers with chips, cracks, voids, discolorations, and other defects that might be visible in finished work.
2. Mix Concrete Pavers from a minimum of three (3) bundles simultaneously drawing the paver vertically rather than horizontally, as they are placed, to produce uniform blend of colors and textures. (Color variation occurs with all concrete products. This phenomenon is influenced by a variety of factors, e.g. moisture content, curing conditions, different aggregates and, most commonly, from different production runs. By installing from a minimum of three (3) bundles simultaneously, variation in color is dispersed and blended throughout the project).
3. Exercise care in handling face mix pavers to prevent surfaces from contacting backs or edges of other units.
4. Provide Permeable Concrete Pavers using joint pattern as indicated. Adjust joint pattern at pavement edges such that cutting of edge pavers is minimized. Cut all pavers exposed to vehicular tires no smaller than one-third of a whole paver.
5. Use string lines or chalk lines on Permeable Setting Bed aggregate to hold all pattern lines true.
6. Set surface elevation of pavers 1/8 in. (3 mm) above adjacent drainage inlets, concrete collars or channels.
7. Place units hand tight against spacer bars. Adjust horizontal placement of laid pavers to align straight.
   a. When installation is performed with mechanical equipment, use only unit pavers with spacer bars on sides of each unit.
8. Provide space between paver units of 1/32 in. (1 mm) wide to achieve straight bond lines.
9. Prevent joint (bond) lines from shifting more than ±1/2 in. (±15 mm) over 50 ft. (15 m) from string lines.
10. Fill gaps between units or at edges of the paved area that exceed 3/8 inch (10 mm) with pieces cut to fit from full-size unit pavers.
11. Cut unit pavers with motor-driven masonry saw equipment to provide clean, sharp, unchipped edges. Cut units to provide pattern indicated and to fit adjoining work neatly. Use full units without cutting where possible. Hammer cutting is not acceptable.
12. Prevent all traffic on installed pavers until Permeable Joint Aggregate has been vibrated into joints. Keep skid steer and forklift equipment off newly laid pavers that have not received initial compaction and Permeable Joint Aggregate material. .
13. Vibrate pavers into leveling course with a low-amplitude plate vibrator capable of a to 5000-lbf (22-kN) compaction force at 80 to 90 Hz. Perform at least three passes across paving with vibrator. Vibrate under the following conditions:
    a. After edge pavers are installed and there is a completed surface.
    b. Compact installed concrete pavers to within 6 feet (1,800 mm) of the laying face before ending each day's work. Cover pavers that have not been compacted and leveling course on which pavers have not been placed, with nonstaining plastic sheets to prevent Permeable Setting Bed Aggregate from becoming disturbed.

14. Protect face mix Concrete Paver surface from scuffing during compaction by utilizing a urethane pad.
15. Remove any cracked or structurally damaged pavers and replace with new units prior to installing Permeable Joint Opening Aggregate material.
16. Provide, spread and sweep Permeable Joint Opening Aggregate into joints immediately after vibrating pavers into Permeable Setting Bed course until full. Vibrate pavers and add Permeable Joint Aggregate material until joints are completely filled, then remove excess material. This will require at least 4 passes with a plate compactor.
17. Remove excess Permeable Joint Aggregate broom clean from surface when installation is complete.

3.04 FIELD QUALITY CONTROL

A. Verify final elevations for conformance to the drawings after sweeping the surface clean.
   1. Prevent final Concrete Paver finished grade elevations from deviating more than ±3/8 in. (±10 mm) under a 10 ft (3 m) straightedge or indicated slope, for finished surface of paving.

B. Lippage: No greater than 1/32 in. (0.8 mm) difference in height between Permeable Concrete Pavers and adjacent paved surfaces.

3.05 REPAIRING, CLEANING AND SEALING

A. Remove and replace unit pavers that are loose, chipped, broken, stained, or otherwise damaged or that do not match adjoining units. Provide new units to match adjoining units and install in same manner as original units, with same joint treatment and with no evidence of replacement.

B. Cleaning: Remove excess dirt, debris, stains, grit, etc. from exposed paver surfaces; wash and scrub clean.
   1. Clean Permeable Concrete Pavers in accordance with the manufacturer's written recommendations.

C. Seal as indicated. (If not indicated elsewhere in the contract documents, sealing is not required and remove this section 3.05, C.)
   1. Apply Sealer for Permeable Concrete Pavers in accordance with the sealer and paver manufacturer's written recommendations.

3.06 PROTECTION

A. Protect completed work from damage due to subsequent construction activity on the site.

3.07 PERMEABLE JOINT AGGREGATE MATERIAL REFILLING

A. Remove all debris from joint and provide additional Permeable Joint Aggregate material after 120 days and before 150 days after date of Substantial Completion/Provisional Acceptance.
   1. Fill Permeable Joint Aggregate material full to the lip of the paver.

NOTE: This preventative maintenance requirement is very important to include in your specification to help increase the long term function of the system. This is a good item to mention during the prebid meeting.

3.08 LIFE CYCLE ACTIVITIES

A. Paver cleaning: Clean Permeable Concrete Pavers as needed to remove staining, dirt, debris, etc.
   1. Clean per manufacturers recommendations.

B. Maintenance: Permeable Joint Aggregate Material.
   1. Annually inspect Permeable Joint Aggregate material for areas clogged with debris.
   2. Vacuum or sweep as necessary to restore surface infiltration.
   3. Remove debris by vacuuming or sweeping Permeable Joint Aggregate
      a. Replenish removed Permeable Joint Aggregate material with clean aggregate material flush to paver lip.

b. Sweep excess material from paver surface.

END OF SECTION

DuraTherm®

A TrafficScapes™ Solution by Ennis-Flint

Inlaid Preformed Thermoplastic Crosswalks and Traffic Calming Surfaces for Asphalt

DuraTherm® is a specially-designed preformed thermoplastic material that is inlaid into an imprinted asphalt surface and thermally bonded using specialized infrared heaters. Engineered to lie slightly below the asphalt surface, DuraTherm® is protected from wear, ensuring effective service life while maintaining its attractive contemporary look for years. Not only do these streetscape enhancements provide aesthetic appeal that communities and property owners desire, safety for shared roadway users is also enhanced and regulatory requirements are not compromised.

PERFORMANCE-BASED FEATURES AND BENEFITS

- High skid/slip resistant for safety. As material wears, new anti-skid elements are exposed.
- 90-mil "grout lines" inlaid to sit slightly below the surface
- Enhanced durability provides optimum wear in adverse conditions; Snowplow friendly
- ADA compliant - Pedestrian and wheelchair friendly surface
- Low maintenance
- Design flexibility with standard and customizable colors and patterns
- Eliminates the maintenance and safety concerns of loose pavers
- All preformed thermoplastic materials are made at Ennis-Flint's manufacturing facility which is ISO 9001:2008 certified for design, development and manufacturing of preformed thermoplastic. Quality, value and long-term performance are built into the marking. Anti-skid elements are added at time of manufacturing for optimized application at the jobsite.

DuraTherm® is installed by a network of Certified Applicators so you can be confident that your design intentions will translate to fully-met expectations on the job site. A specialized pavement heater softens the existing asphalt. Templates are pressed into the surface to create the imprinted pattern. Pre-cut sections of DuraTherm® are set into these impressions. The specialized heater is used again to bond the material to the asphalt surface.

1.

2.

3.

STANDARD PATTERNS

Custom patterns are available requiring a minimum purchase.

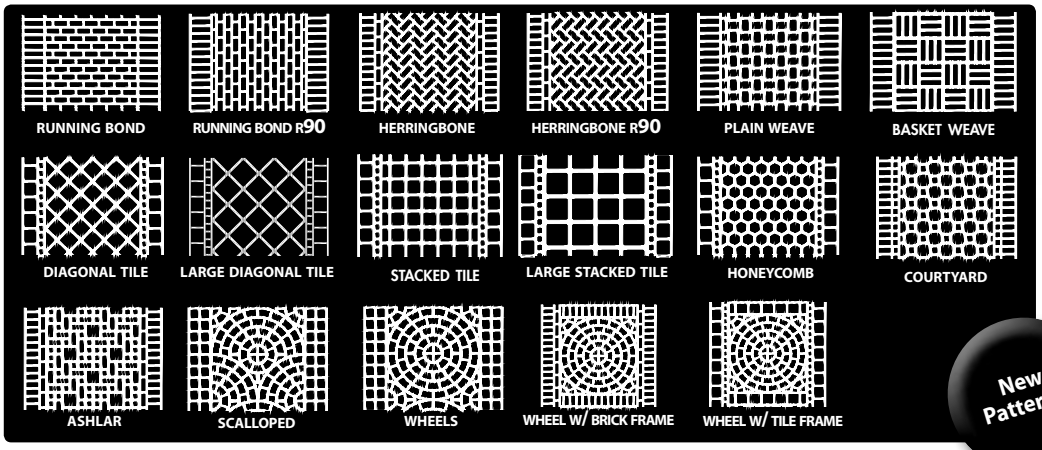

New Patterns!

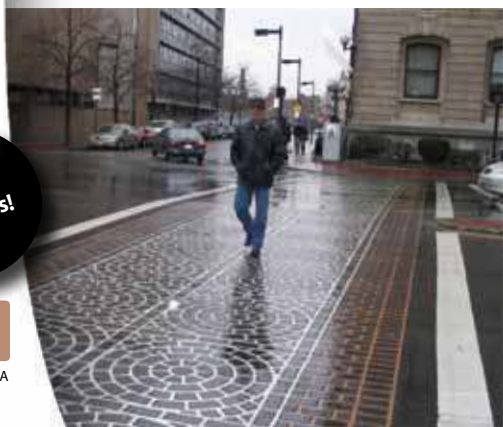

STANDARD COLORS

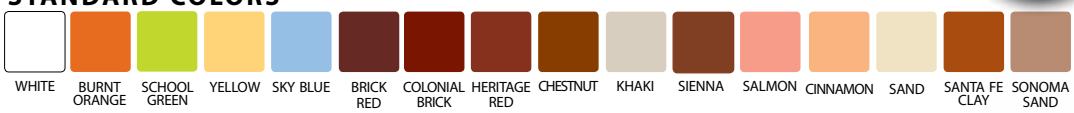

TrafficScapes™

Surface Systems for Enhanced Safety

CROSSWALKS • MEDIANS • ISLANDS • ROUNDABOUTS • ENTRYWAYS • LOGOS

TrafficScapes™ is a portfolio of preformed thermoplastic pavement marking materials engineered for durability, safety, and aesthetics for the streetscape and traffic calming market designed to:

- Improve traffic safety especially at intersections and multi-use paths
- Enhance visibility for pedestrians, motorists, and cyclists
- Provide design elements that complement a Complete Streets community
- Channel pedestrians across busy commercial parking areas
- Promote and/or revitalize community image
- Attract new business development in livable communities
- Create low-cost median or island effect without the use of raised curbs

Each product offers its own unique application and performance approach to streetscape projects where shared roadway safety and aesthetic appeal need to work in conjunction.

DuraTherm® by Ennis-Flint — INLAID

TrafficPatternsXD™ by Ennis-Flint — IMPRESSED

TrafficPatterns® by Ennis-Flint — INTERCONNECTED

TrafficPatternsLT™ by Ennis-Flint — OVERLAY

DecoMark® by Ennis-Flint — SURFACE SIGNS

When used on public roadways and private properties open to public travel, decorative crosswalks require proper demarcation with white linear boundaries according to the Manual on Uniform Traffic Control Devices (MUTCD).

ENNIS-FLINT
A Traffic Safety Solutions Company

Ennis-Flint • 115 Todd Ct. Thomasville, NC • 336.475.6600
trafficscapes@flinttrading.com • www.ennisflint.com

MKT-00014

A PRODUCT PORTFOLIO OF

PREFORMED THERMOPLASTIC

DURABLE PAVEMENT MARKINGS

ENNIS-FLINT®

A TRAFFIC SAFETY SOLUTIONS COMPANY

ISO 9001:2008 Certified Manufacturer and Distributor

Ennis-Flint manufactures and supplies a complete line of preformed thermoplastic pavement markings at our ISO 9001:2008 certified facility in Thomasville, North Carolina.

Ennis-Flint is devoted to increasing road safety awareness and is very active in private and public committees and task forces called upon to set standards and implement policies that will provide better roadway safety.

Traffic safety is not just the responsibility of the driver, pedestrian, cyclist or road worker. It is everyone's concern. While local municipalities and contractors look to us for the industry's most advanced and reliable products and responsive service, our commitment goes far beyond that.

We are even more passionate where the interests of our customers are concerned. Employees of Ennis-Flint are committed to providing exceptional service and value including:

- Free product demonstrations
- Hands-on training in the field
- The industry's shortest delivery times
- Real time answers to our customers' toughest questions
- In-house technical support
- Custom-made specialty markings

This brochure provides an overview of the products and services offered by Ennis-Flint. We invite you to contact our Product Support Team for more information or to discover how our products can help meet your traffic safety needs.

Contact Us:

Ennis-Flint
115 Todd Court
Thomasville, NC 27360
Phone: (800) 331-8118
Fax: (336) 475-7900
email: sales@ennisflint.com
www.ennisflint.com

Call Ennis-Flint today for a detailed brochure on any product in this brochure.

PreMark® by Ennis-Flint

No preheating surface required

PreMark® Pavement Markings

- Heavy-duty, durable intersection grade pavement marking material
- Complies with MUTCD; used primarily for regulatory markings on public streets and highways and private properties
- Supplied at 125 mil for cost-effective service life
- Lasts 6 to 8 times longer than paint
- No minimum ambient or road temperature requirements; pavement marking season can be extended into colder months
- Preheating pavement to specific temperature is not required
- Retroreflective; glass beads mixed throughout material so that as marking wears new beads exposed
- Precut; ready to use out of the carton
- Clean, crisp appearance
- Quick and simple mobilization; no heavy equipment to set-up and clean
- Made at ISO 9001:2008 certified facility
- No lead chromate or VOCs
- Simple 3-step application process with Flint 2000 EX Heat Torch

The top surface of the material has regularly spaced heating indicators which provide a visual cue during application that the material has reached a molten state indicating satisfactory adhesion and proper bead embedment has been achieved. The heating indicators also provide a post-application visual cue that the installation procedures have been followed.

ViziGrip®

Specially made for crosswalks, bike paths, handicap markings and other pedestrian uses, ViziGrip® is a unique feature designed to ensure that skid resistance and retroreflectivity are optimized especially where loss of traction in wet conditions is of great concern.

ViziGrip® can be added to any of the PreMark® lines, legends, arrows, and other designs in 90-mil and 125-mil thicknesses.

PreMark® Contrast Markings

Enhance contrast and improve visibility day and night with PreMark® Contrast Markings for light-colored asphalt and concrete applications.

BORDER CONTRAST

BLOCK CONTRAST

The white and yellow 125-mil PreMark® material is retroreflective and skid resistant while the black contrasting border is skid resistant and non-reflective.

PreMark® Block Contrast Markings are available in 125-mil and provide even greater visibilty. PreMark® Contrast Markings are convenient to use because the two colors of material are interconnnected for easier handling and positioning.

The 4", 5" and 6" width white or yellow linear material has a 1.5" contrasting border. The 8" width linear material has a 3" contrasting border. For lines wider than 8", use black linear PreMark® material.

PreMark® Interstate and Route Shields

There has been a growing use of these "horizontal surface signs" in lieu of, or as a supplement to the typical shoulder-mounted or overhead traffic signs. Standard sizes are 4' x 10', 6' x 15' and 8' x 20'.

Many states are discovering these shields help improve traffic flow and safety by providing a clear, concise message to direct motorists to the proper lane, before reaching a particular exit or intersection.

PreMark® Interstate Shields are simple to apply because the large marking comes packaged in layout sequence according to the particular design. The different colors of material are interconnected making it easy and convenient to handle and position for application with a propane heat torch or a large radiant heater.

PreMark® Storm Drain Markings

PreMark® Storm Drain Markings are designed to educate the public and increase awareness about dangers of pollutants flowing into our water system.

These markings include messages such as "No Dumping!", "Drains to Ocean" and "No Dumping! It Kills". Unlike paint that can actually wash down the drain in a short time, PreMark® preformed thermoplastic markings stay in place so your messages remain easy to read and understand.

PreMark® Storm Drain Markings with ViziGrip® are made of durable preformed thermoplastic which provides enhanced visibility and skid resistance for pedestrian safety.

There are many designs available with the most typical being a 29" x 5" marking with two layers of PreMark® consisting of a blue non-beaded base layer with a white beaded stencil top layer.

PreMark® Heavy-Duty Adhesives

BUNDY

PreMark® Adhesives are made out of non-toxic, zero V.O.C. preformed thermoplastic.

Bundys® adhere raised pavement markers to the road surface and provide a bond that will last throughout the marker's lifetime. Each 5" x 5" Bundy® is made of 125-mil preformed thermoplastic. When heated with a propane heat torch, a Bundy® liquifies and fuses with the road surface and the marker providing a bond that will last throughout the marker's lifetime.

SUPER BUNDY PLUS

SuperBundy™ designed for applications where the object bonded to the road surface may be hit with extreme force. The SuperBundy™ Plus has resilient characteristics which enable it to remain flexible throughout its lifetime. It adheres large objects on horizontal surfaces such as tubular markers, wheel stops, large "turtle" markers and buttons. Available in 2"x39" strips and 8"x8" pads.

PreMark® Bike Lane Markings

PreMark® Bike Lane Markings with ViziGrip®, available in 90-mil and 125-mil, provide a safe solution ensuring both skid resistance and retroreflectivity are optimized.

PreMark® Bike Boxes and Panels are also available for use in high-traffic areas subjected to vehicular traffic. The two colors of material are interconnected allowing the user to easily handle and position the marking prior to heating.

See the PreMark Price List for standard sizes and options.

PreMark® Manhole Protection Rings (MPRs)

BEFORE

AFTER

PreMark® MPRs offer year-round Protection against damage. Road construction, resurfacing and sewer maintenance can result in manhole covers that do not match the exact grade and crown of the road. The PreMark® Manhole Protection Ring System is designed with a subtle incline that provides a smooth, damage-free ride for daily traffic. MPRs help solve equipment maintenance concerns and potential injury hazards.

Each ring is made of durable non-beaded 125-mil PreMark® material. As many as three rings can be combined to create a smooth transition. Actual ring dimensions depend on the size of the manhole or valve cover.

See the PreMark Price List for standard sizes.

PreMark® In-Lane Rumble Bars

Using audible and vibratory signals, PreMark® In-Lane Rumble Bars help reduce driver risk and unsafe driving practices due to special road conditions.

Base layer is 125-mil non-beaded PreMark® and the top layer is a 250-mil PreMark® Rumble Bar; both layers must be used together. It is effective to use in combination with appropriate signage and word legends.

Situations where rumble bars could be effective include, but are not limited to, high incident areas, approaches to newly-installed stop signs or traffic lights, railroad crossings, signalized controlled intersections, work zones, toll facilities, hazardous curves, and rural high-speed intersections with sight restrictions.

PreMark® Rumble Bars are available in black, white, yellow and orange. Maintenance is easy as a new rumble bar section can be easily cut to fit any worn or damaged area.

See the PreMark Price List for standard sizes.

PreMark® Handicap Markings

PreMark® Handicap Markings with ViziGrip® are virtually maintenance free and durable enough to last 6 to 8 times longer than painted surfaces. These high-visibility markings are ADA compliant and offer high skid resistance for pedestrian safety. Although available in a variety of sizes, the standard PreMark® Handicap Kit (40"x40" white symbol on a blue background) is compliant with the FHWA Standard Highway Signs Book.

PreMark® Accessibility Kits are more convenient to install because the two-colored material is physically held together with a compatible material allowing the user to easily handle and position the marking prior to application.

See the PreMark Price List for standard sizes.

HOTTAPE™ by Ennis-Flint

Preheating Surface Required

Preformed Thermoplastic Pavement Markings

- Heavy-duty, durable intersection grade pavement marking material
- Preheating pavement to specific temperature is required
- Complies with MUTCD; used primarily for regulatory markings on public streets and highways and private properties
- Supplied at 125-mil and 90-mil
- Retroreflective; glass beads mixed throughout material so that as the marking wears new beads exposed
- White and yellow linear material available in rolls
- SkidOptics™ provides enhanced skid resistance
- Precut; ready to use out of the carton
- Clean, crisp appearance
- Made at ISO 9001:2008 certified facility
- No lead chromate or VOCs
- Quick and simple mobilization; no heavy equipment to set-up and clean
- Simple 3-step application process with Magnum Heat Torch

Consider the optional cylinder trolley. It provides an easy way to transport heat torches and propane cylinders.

Flint 2000 EX™ Heat Torch

Safety Makes the Flint 2000 EX™ Stand Out

With its patented cold burning fan-shaped nozzle, the Flint 2000 EX™ propane heat torch is specially designed for installing preformed thermoplastic pavement markings and adhesives. The fan-shaped nozzle ensures even heating when applying preformed thermoplastic in any season, but especially in windy, wet spring months. The swivel hose connector prevents kinks and twisting.

This UL-listed heat torch features and electric ignition, hand guard, deadman trigger, and an automatic shut-off valve with POL fittings for maximum safety.

It can also be used for removal of paint, drying loop detector grooves, removal of cold plastic and temporary tape, shrinking plastic for wrapping, drying road surfaces and for melting snow or ice.

Using the Flint 2000 EX™ to apply preformed thermoplastic pavement markings will reduce the likelihood that the surface glass beads will sink too much when heating. Other heat torches may put out so much concentrated heat in one spot that it is virtually impossible to control the embedment of the surface glass beads which can result in lower initial retroreflectivity.

TopMark® by Ennis-Flint

Surface-Applied Detectable Warning Material

- Applies on concrete (including green) and asphalt; new and existing surfaces
- Supplied in convenient kit to complete 32 sq. ft. of application
- Complies with current Public Rights-of-Way Accessibility Guidelines (PROWAG) and ADAABA-Accessibility Guidelines (formerly ADAAG)
- New convenient 2'x4' sheet; also in 2'x3', 1'x2', 1'x3', plus a wedge piece
- Conforms to contours
- Easy to cut with heavy-duty scissors for special angles and curves
- No fasteners, anchors or power tools required
- Quick and simple mobilization
- Slip resistant; abrasive component throughout material
- Long-lasting color pigments are organic and contain no heavy metals
- The truncated domes are integral parts of the material - not add-ons.
- Made at ISO 9001:2008 certified facility
- Simple 4-step application process with Flint 2000EX® Heat Torch

DecoMark® by Ennis-Flint

Typical Colors

WHITE	YELLOW	GREEN	RED	LIGHT BLUE	SAND	GREY	BLACK
ORANGE	EF BIKE LANE GREEN	PURPLE	BRICK	BLUE	SYG	LIGHT GRAY	

Horizontal Surface Signage

- Durable intersection-grade preformed thermoplastic pavement marking material
- Enhance regulatory transportation and pedestrian guidance; promote community pride and safety
- Precut; ready to use out of the carton
- Interconnected shapes and colors; easy to handle
- Lasts 6 to 8 times longer than paint
- ViziGrip® provides enhanced visibility and skid/slip resistance
- Material flush to surface; no tripping hazard; wheelchair/shopping cart-friendly
- Clean, crisp appearance
- No minimum ambient or road temperature requirements; pavement marking season can be extended into colder months
- Heating indicators in surface of material provide visual cue for proper application
- Made at ISO 9001:2008 certified facility
- No lead chromate or VOCs
- Application on asphalt and concrete
- Simple application process with propane heat torch or large heater

ENNIS-FLINT®
A Traffic Safety Solutions Company

www.ennisflint.com

CORPORATE OFFICE
115 Todd Court • Thomasville, NC 27360
800.331.8118 Toll Free • 336.475.7900 Fax
sales@ennisflint.com

©2015 Ennis-Flint MKT-00008-A

Instructions

Assembly
Installation
Operation

7/2007

Neoliviano Bench

HANDLE WITH CARE! Do not place or slide parts on concrete or other hard or abrasive surfaces.

Recommended procedure for surface mounting:

Each surface mount bench is shipped with two mounting plates installed on every support casting. Each plate can accept one anchor up to 3/8" diameter. Although the anchoring procedure and hardware are the responsibility of the installer, we suggest the following:

1. Select corrosion resistant anchors appropriate for the surface. Your hardware store or builders supply may be able to recommend the proper hardware, tools, and safety equipment.
2. Check the screws that fasten the mounting plates to the bench. Align plates as shown below and tighten mount screws with a 6mm Allen wrench if necessary.
3. Place the bench in the desired position.
4. Mark hole locations.
5. Move the bench to allow access for drilling holes.
6. Install the anchors and bench according to the anchor manufacturer's instructions.

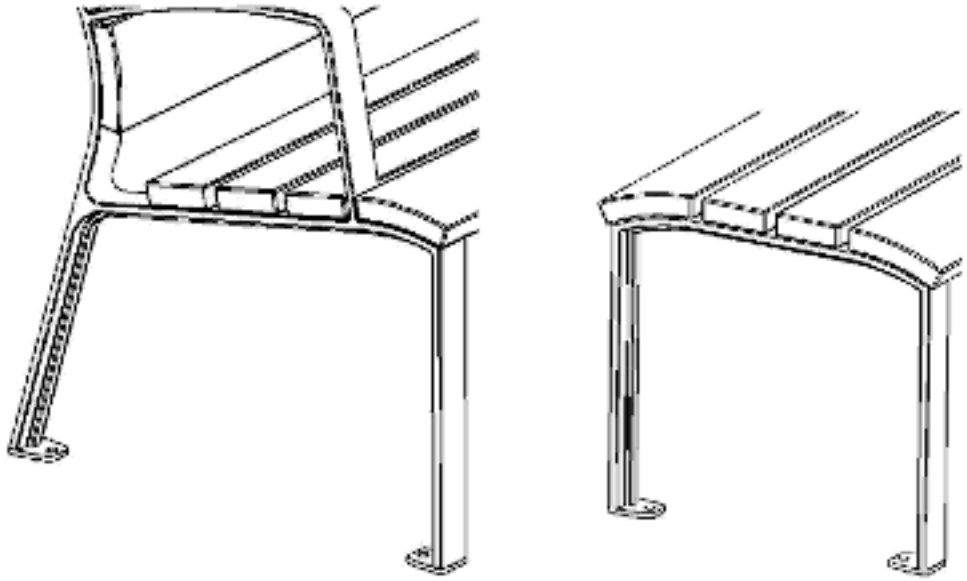

Correct tab alignment for backed and backless benches shown above.

431 Lawndale Avenue, Kalamazoo, MI 49048
PH. 800.521.2546, PH. 269.381.0395, FX. 269.381.3455

Instructions

Assembly
Installation
Operation

Recommended procedure for embedded mounting:

Each embedded bench is shipped with two M10 threaded rods per support casting. For mounting to existing concrete, we recommend using an adhesive anchoring system (Hilti HIT RE 500 or Powers Fasteners AC100 PLUS™). These products may be used in wet or dry conditions. Gel and cure times vary with temperature. Each bench support requires approximately 1-1/2 ounces of adhesive. Although the anchoring procedure is the responsibility of the installer, we suggest the following:

1. Place bench upside down on non-marring material.
2. Locate and install two M10 threaded rods in each support. Leave 4" of threaded rod sticking out of the support. DO NOT thread rods in until they bottom out.
3. Place the bench in the desired position.
4. Mark hole locations around rods.
5. Move the bench to allow access for drilling holes.
6. Hammer drill 5/8" holes, 4-1/2" deep.
7. Clean holes carefully using a 1" diameter nylon brush and compressed air. For best results use a nozzle that reaches the bottom of the hole. Holes must be free of standing water or ice.
8. Follow the manufacturer's instructions for dispensing adhesive. Fill the holes from the bottom up to avoid air pockets. Fill to a level 1" from the top of each hole. (The adhesive level should rise to the top of the hole as the bench is set in place.)
9. Set the bench in the installed position. Do not disturb the bench during the cure time.
10. Wipe away any spilled adhesive before it gels.

431 Lawndale Avenue, Kalamazoo, MI 49048
PH. 800.521.2546, PH. 269.381.0395, FX. 269.381.3455

7800 E. Michigan Ave.
Kalamazoo, Michigan 49048
Phone: (800) 521-2546
Fax: (269) 381-3455
www.landscapeforms.com
specify@landscapeforms.com

NeoLiviano bench
Product Guide Specification

Specifier Notes: This product guide specification is written according to the Construction Specifications Institute (CSI) 3-Part Format, including *MasterFormat, SectionFormat,* and *PageFormat,* as described in *The Project Resource Manual—CSI Manual of Practice, Fifth Edition.*

The section must be carefully reviewed and edited by the Architect to meet the requirements of the project and local building code. Coordinate this section with other specification sections and the Drawings. Delete all "Specifier Notes" after editing this section.

Section numbers are from *MasterFormat 2010 Edition*.

SECTION 12 93 43.13 BENCHES

Specifier Notes: This section covers Landscape Forms, Inc. "Neoliviano" benches. Consult Landscape Forms, Inc. for assistance in editing this section for the specific application.

PART 1 GENERAL

1.1 SECTION INCLUDES

A. Benches.

1.2 SUBMITTALS

A. Product Data: Submit manufacturer's product data, storage and handling requirements and recommendations, installation methods and available colors, styles, patterns and textures.
B. Shop Drawings: Submit manufacturer's shop drawings, including plans and elevations, indicating overall dimensions.
C. Samples: Submit manufacturer's samples of materials, finishes, and colors.
D. Warranty: Manufacturer's standard warranty.

1.3 QUALITY ASSURANCE

A. Manufacturer's Qualifications: Manufacturer regularly engaged in manufacture of site furnishings since 1969.
B. Product Support: Products are supported with complete engineering drawings and design patents.
C. Base Worth: An installed base of products worth in excess of one hundred million dollars.
D. Assets: Excess of twenty million dollars in assets.
E. Production: Orders are filled within a 40-day schedule.
F. Facility Operator: Welders and machine operators are certified.

1.4 DELIVERY, STORAGE, AND HANDLING

A. Delivery: Deliver materials to site in manufacturer's original, unopened containers and packaging, with labels clearly identifying product name and manufacturer.

B. Storage: Store materials in clean, dry area in accordance with manufacturer's instructions. Keep materials in manufacturer's original, unopened containers and packaging until installation.
C. Handling: Protect materials and finish during handling and installation to prevent damage.

1.5 WARRANTY

A. Warranty Information:

-Products will be free from defects in material and/or workmanship for a period of three years from the date of invoice.

-The warranty does not apply to damage resulting from accident, alteration, misuse, tampering, negligence, or abuse.

- Landscape Forms, Inc. shall, at its option, repair, replace, or refund the purchase price of any items found defective upon inspection by an authorized Landscape Forms service representative.

-Purchasers should be aware that normal use of these high quality products can result in superficial damage affecting the finish. Scratches, nicks, and dents are to be considered normal wear and tear, and are not the responsibility of the manufacturer.

PART 2 PRODUCTS

2.1 MANUFACTURER

A. Landscape Forms, Inc., 7800 E. Michigan Ave, Kalamazoo, Michigan 49048.
Phone: (800) 521-2546. Fax (269) 381-3455. Website www.landscapeforms.com
E-mail: specify@landscapeforms.com

2.2 BENCHES

A. "Neoliviano" Benches

Specifier Notes: Specify bench style and length.

B. Style:
1. Backless
2. Backed with Arms

C. Length:
1. Backless
   a. 24 inches.
   b. 59 inches.
   c. 118 inches.
2. Backed
   a. 24 inches.
   b. 69 inches.
   c. 118 inches.

Specifier Notes: Specify bench mounting.

D. Mounting:
1. Embedded
2. Surface mounted
3. Freestanding

2.3 MATERIALS

A. Cast Supports: Cast supports are made of A514 or A535 aluminum.
B. Seat and Back Panels: Board thickness of 1-3/16 inches.

Specifier Notes: Specify wood seat and back panels. Delete materials not required.

1. Wood for Exterior Use:
   a. Jarrah: Solid stock, select Australian hardwood.
2. Wood for Interior Use:
   a. Jarrah: Solid stock, select Australian hardwood.

Specifier Notes: Delete if it does not apply.

C. Center Strap: The center straps are made of 5/32" x 1" stainless steel.
D. Mounting:
   1. Freestanding: Freestanding units have nylon 6-6-400 glides installed.
   2. Surface Mount: Surface mount units have type 304 stainless steel anchor tabs installed.
   3. Embedded: Embedded units are supplied with two 10mm x 120mm carbon steel with Magni-coat threaded rods for each support casting.

2.4 ACCESSORIES

Specifier Notes: Specify anchor bolts for surface-mounted benches. Delete for embedded or freestanding.

A. Anchor Bolts: Corrosion resistant recommended (not supplied by manufacturer)

2.5 RECYCLED CONTENT

A. Neoliviano Benches:
   -Recycled Material Content: Minimum 6 percent.
   -Post-Consumer Material Content: Minimum 3 percent.
   -Pre-Consumer Material Content: Minimum 3 percent.
   -Recyclable: 100 percent.

2.6 FABRICATION

A. Shop assembled benches.

2.7 FINISHES

A. Finish on Aluminum: Supports are anodized to provide corrosion protection.

Specifier Notes: Specify finish for exterior or interior use. Consult Landscape Forms, Inc. for more information.

B. Finish on Wood:
   1. Wood for Exterior Use: Unfinished.
   2. Wood for Interior Use: Finished with "LF-80" catalyzed lacquer.

PART 3 EXECUTION

3.1 EXAMINATION

A. Examine areas to receive benches.
B. Notify Architect of conditions that would adversely affect installation or subsequent use.
C. Do not begin installation until unacceptable conditions are corrected.

3.2 INSTALLATION

A. Install benches in accordance with manufacturer's instructions at locations indicated on the Drawings.

B. Install benches level.
C. Anchor benches securely in place, if surface mount or embedded.

3.3 ADJUSTING

A. Finish Damage: Repair minor damages to finish in accordance with manufacturer's instructions and as approved by Architect.
B. Component Damage: Remove and replace damaged components that cannot be successfully repaired as determined by Architect.

3.4 CLEANING

A. Clean benches promptly after installation in accordance with manufacturer's instructions.
B. Do not use harsh cleaning materials or methods that could damage finish.

3.5 PROTECTION

A. Protect installed benches to ensure that, except for normal weathering, benches will be without damage or deterioration at time of Substantial Completion.

END OF SECTION

211 North Lindbergh Blvd., Suite 200, St. Louis, MO 63141
Tel: 888.535.5005, Fax: 314.754.0835

SECTION 129305 – EXPOSITION BENCHES

PART 1 - GENERAL

1.1 RELATED DOCUMENTS

A. Drawings and general provisions of the Contract, including General and Supplementary Conditions and Division 01 Specification Sections, apply to this Section.

1.2 SUMMARY

A. Section Includes:

1. Exposition Benches

B. Related Sections:

1. Section 129335 – Exposition Trash Receptacles

1.3 ACTION SUBMITTALS

A. Product Data: For each type of product.

B. Samples for Verification: For each type of exposed finish, not less than 6-inch- long linear components and 4-inch square sheet components.

1.4 CLOSEOUT SUBMITTALS

A. Maintenance Data: For site furnishings to include in maintenance manuals.

1.5 WARRANTY

A. Manufacturer offers a limited-warranty and agrees to repair or replace steel, aluminum, and cast iron bench frames and bench assemblies that fail in materials or workmanship within specified warranty period only when product is assembled and installed per the manufacturers instruction provided with each shipment and item.

1. Failures include the following:

a. Structural failures.

2. Warranty excludes acts of vandalism, abuse, and misuse.
3. Warranty Period: Twenty years from date of purchase.

211 North Lindbergh Blvd., Suite 200, St. Louis, MO 63141
Tel: 888.535.5005, Fax: 314.754.0835

B. Finish Warranty: Manufacturer agrees to repair finishes or replace components that show evidence of deterioration of factory-applied finishes within specified warranty period.

1. Deterioration includes the following:

a. Rust, fading, peeling, chipping, cracking, mold, and mildew.

2. Warranty excludes acts of vandalism, abuse, and misuse.
3. Warranty Period: Seven years from date of purchase.

PART 2 - PRODUCTS

2.1 MANUFACTURER

A. Manufacturer: Subject to compliance with requirements, provide the following products by ANOVA; St. Louis, MO; 888-535-5005; www.anovafurnishings.com.

2.2 BENCHES STYLES

A. #LEXC6; 6’ contoured bench w/ arms and back.

1. Seat Height: 18-1/4”.
2. Overall Back Height: 33-3/8”.
3. Overall Depth: 25-1/4”.

B. #LEXF6; 6’ flat bench.

1. Seat Height: 18-1/4”.
2. Overall Back Height: 33-3/8”.
3. Overall Depth: 20-7/8”.

2.3 COMPONENTS

A. Frame: Painted Steel.

B. Seat and Back:

1. Material:

a. Steel: 10 gauge steel perforated in a parallel strap pattern.

2. Arms: One on each end.

a. Arm Material: 1/2” steel plate.

C. Tested Bench Capacity: 200 lbs. per lineal foot.

D. Steel Finish: PVC-color coated.

1. Color: As selected by Architect from manufacturer's full range.

2.4 MATERIALS

A. Steel: Free of surface blemishes and complying with the following:

1. Plates, Shapes, and Bars: ASTM A 36/A 36M.
2. Sheet: Commercial steel sheet complying with ASTM A 1011/A 1011M.

B. Fasteners, Fittings, and Hardware: Stainless steel commercial quality.

2.5 FABRICATION

A. Metal Components: Steel strap design created with perforated steel panels formed to required shapes and sizes with true, consistent curves, lines, and angles. Separate metals from dissimilar materials to prevent electrolytic action.

B. Welded Connections: Weld connections continuously. Weld solid members with full-length, full-penetration welds and hollow members with full-circumference welds. At exposed connections, finish surfaces smooth and blended so no roughness or unevenness shows after finishing and welded surface matches contours of adjoining surfaces.

C. Tubes: Form simple and compound curves by bending members in jigs to produce uniform curvature for each repetitive configuration required; maintain cylindrical cross section of member throughout entire bend without buckling, twisting, cracking, or otherwise deforming exposed surfaces of handrail and railing components.

D. Exposed Surfaces: Sanded, or otherwise finished; all surfaces smooth, free of burrs, barbs, and sharpness; all edges and ends rolled or rounded.

E. Factory Assembly: Assemble components in the factory to greatest extent possible to minimize field assembly. Clearly mark units for assembly in the field.

2.6 GENERAL FINISH REQUIREMENTS

A. Appearance of Finished Work: Noticeable variations in same piece are not acceptable. Variations in appearance of adjoining components are acceptable if they are within the range of approved Samples and are assembled or installed to minimize contrast.

2.7 STEEL AND IRON FINISHES

A. PVC Finish: Manufacturer's standard .125 inch thick per surface, UV-light stabilized, mold-resistant, slip-resistant, matte-textured, dipped or sprayed-on, PVC-plastisol finish encapsulated with a richly tinted high performance patented Fusion Advantage™ topcoat; complying with

coating manufacturer's written instructions for pretreatment, application, and minimum dry film thickness.

1. Fusion Advantage™ TopCoat: Complies with ASTM E 1354 and is compliant with California Uniform Fire Code 1103.2.2.4.2.

B. Powder-Coat Finish: Manufacturer's standard, baked, polyester, powder-coat finish complying with finish manufacturer's written instructions for surface preparation, including pretreatment, application, baking, and minimum dry film thickness.

C. Primer: Manufacturers standard fade-resistant powder coat over state-of-the-art primer applied to all under supports to provide rust fighting protection and durability exceeding industry standards by 34% when tested by independent sources.

PART 3 - EXECUTION

3.1 EXAMINATION

A. Examine areas and conditions, with Installer present, for compliance with requirements for correct and level finished grade, mounting surfaces, installation tolerances, and other conditions affecting performance of the Work.

B. Proceed with installation only after unsatisfactory conditions have been corrected.

3.2 INSTALLATION, GENERAL

A. Comply with manufacturer's written installation instructions unless more stringent requirements are indicated. Complete field assembly of site furnishings where required.

B. Unless otherwise indicated, install site furnishings after landscaping and paving have been completed.

C. Install site furnishings level, plumb, true, and securely anchored at locations indicated on Drawings.

END OF SECTION 129305

211 North Lindbergh Blvd.
St. Louis, MO 63141
800.231.1327 tel.| 314.754.0835 fax
specify@anovafurnishings.com
anovafurnishings.com

LEXC4— Exposition 4' Contour Bench

4' contour bench with steel slat seat, armrests and portable/surface mount legs

Material
The 4' contour bench is composed of a 10-gauge steel slat seat with a .5" wide slot pattern and steel legs and armrests. The bench is 51.02" long and will support 200 lbs. per linear foot.

The bench is designed to be portable for flexibility in placement or surface mounted using predrilled .4" diameter holes in feet to prevent movement. Mounting hardware is not included.

Finish
Steel slat seat is protected by the patented Fusion Advantage™ finish. The plastisol coating has an average thickness of .125" and is encapsulated with a richly tinted, high performance powder coating that won't rust, fade, peel, chip, crack, mold or mildew. The finish has been tested to the requirements of ASTM E1354 and determined to be in compliance with California Uniform Fire Code 1103.2.1.4.2.

Fade-resistant, powder coated steel legs, armrests and under supports features a state-of-the-art primer proven to prevent rusting. Treated components exceed the industry standard by 34% in testing by independent sources.

Color
See website or sales representative for color choices.

Assembly
The bench requires some assembly. Stainless steel assembly hardware is included.

Maintenance
The product is virtually maintenance-free and requires only periodic cleaning with a sponge and a solution of mild detergent and water to remove surface dirt. Do not clean with solvent or petroleum base products.

Warranty
20-year limited structural warranty with 7-year finish warranty from the date of purchase. See full details on multi-year warranties for components at *www.anovafurnishings.com/warranty.aspx*.

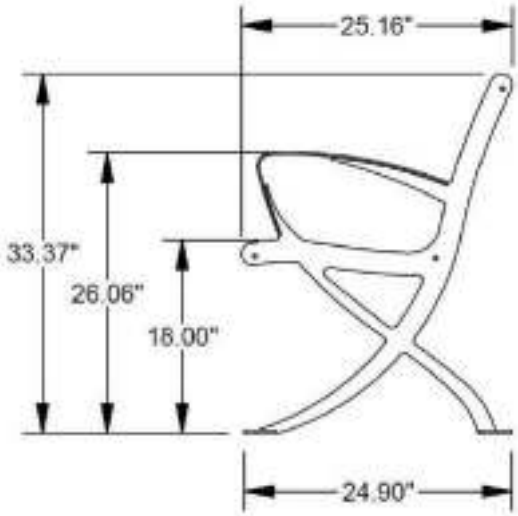

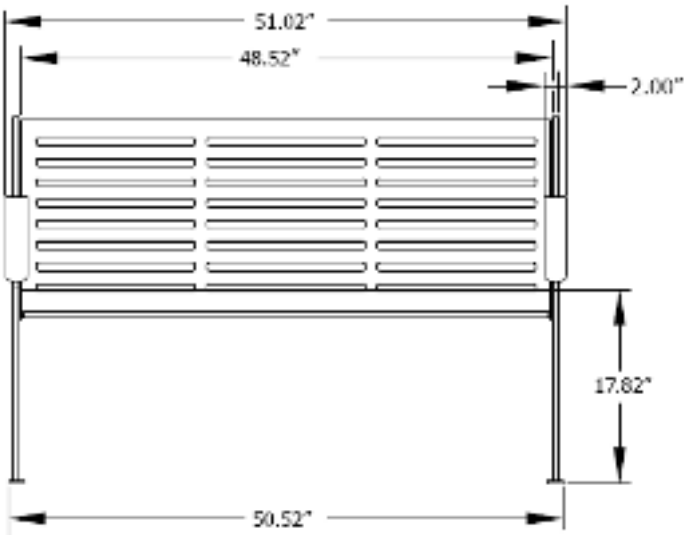

SHIPPING INFORMATION

Unit Weight	Unit Shipping Wt. UPS	Unit Shipping Wt. Truck (1+ Units)	Unit Ship Size w/Pallet	Max Units Per Pallet	Pallet Size/Wt. (32" x 48")	Total No. Pkgs.	Shipping Class
126 lbs.	N/A	139 lbs./unit	18 cu. ft.	6	50 lbs.	3	70

 Copyright 2015 ANOVA® Made in U.S.A

211 North Lindbergh Blvd.
St. Louis, MO 63141
800.231.1327 tel.| 314.754.0835 fax
specify@anovafurnishings.com
anovafurnishings.com

LEXC6— Exposition 6' Contour Bench

6' contour bench with steel slat seat, armrests and portable/surface mount legs

Material

The 6' contour bench is composed of a 10-gauge steel slat seat with a .5" wide slot pattern and steel legs and armrests. The bench is 74.77" long and will support 200 lbs. per linear foot.

The bench is designed to be portable for flexibility in placement or surface mounted using predrilled .4" diameter holes in feet to prevent movement. Mounting hardware is not included.

Finish

Steel slat seat is protected by the patented Fusion Advantage™ finish. The plastisol coating has an average thickness of .125" and is encapsulated with a richly tinted, high performance powder coating that won't rust, fade, peel, chip, crack, mold or mildew. The finish has been tested to the requirements of ASTM E1354 and determined to be in compliance with California Uniform Fire Code 1103.2.1.4.2.

Fade-resistant, powder coated steel legs, armrests and under supports features a state-of-the-art primer proven to prevent rusting. Treated components exceed the industry standard by 34% in testing by independent sources.

Color

See website or sales representative for color choices.

Assembly

The bench requires some assembly. Stainless steel assembly hardware is included.

Maintenance

The product is virtually maintenance-free and requires only periodic cleaning with a sponge and a solution of mild detergent and water to remove surface dirt. Do not clean with solvent or petroleum base products.

Warranty

20-year limited structural warranty with 7-year finish warranty from the date of purchase. See full details on multi-year warranties for components at *www.anovafurnishings.com/warranty.aspx*.

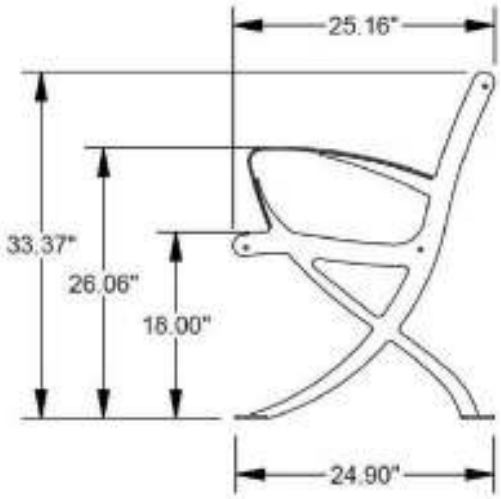

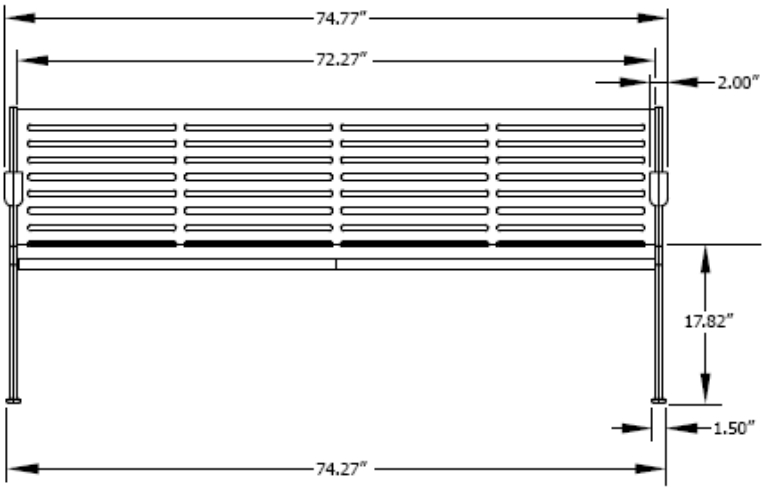

SHIPPING INFORMATION

Unit Weight	Unit Shipping Wt. UPS	Unit Shipping Wt. Truck (1+ Units)	Unit Ship Size w/Pallet	Max Units Per Pallet	Pallet Size/Wt. (32" x 74")	Total No. Pkgs.	Shipping Class
159 lbs.	N/A	176 lbs./unit	27 cu. ft.	6	100 lbs.	3	70

 Copyright 2015 ANOVA® Made in U.S.A

Assembly Instructions

LEXC4 Exposition 4' Contour Bench
LEXC5 Exposition 5' Contour Bench
LEXC6 Exposition 6' Contour Bench

anovafurnishings.com
888.535.5005 tel

TOOLS NEEDED:

- ½" Open-end or box-end wrench or ratchet with ½" socket
- Phillips head screwdriver

BENCH COMPONENTS:

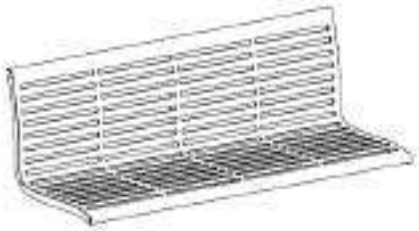

(1) Bench Seat

(2) Bench Supports

ASSEMBLY HARDWARE: All hardware is stainless steel.

(6) 5/16" x 1 1/2" Phillips Head Screws

(6) 5/16" Nylock Nuts

(6) 5/16" Flat Washers

(8) Plastic Rectangular Feet

(16) Adhesive Strips

ASSEMBLY:

1. Inspect the shipping container contents for damage and to determine that all components and hardware are present.

2. Assemble the bench over the shipping packaging or padded work area to avoid scratching the product.

NOTE: Before assembling the nuts to the screws, it is recommended that a light oil or petroleum jelly be applied to the screw threads.

3. Locate one of the bench supports and position it near the end of the seat. Before proceeding, double-check that the seat portion is oriented horizontally and the back rest is vertical before assembling. The front edge of the seat portion of the bench has a slight curve to it. The mounting holes will not match up unless the bench seat is aligned to the bench supports in the proper orientation.

4. Apply two adhesive strips to one of the plastic rectangular feet. Then firmly apply the plastic rectangular to the metal foot of the bench support aligning the holes in each. Repeat for each of the remaining feet.

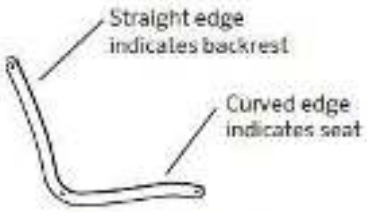

SEAT ORIENTATION

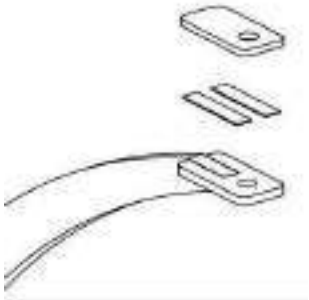

5. Align the mounting holes in the bench support with the holes on one end of the bench seat. Insert one of the 5/16” x 1 1/2” Phillips head screws through both parts, with the screw head on the outside surface of the bench support. Place a 5/16” flat washer and 5/16” Nylock nut on the inside end of the screw and finger tighten.

NOTE: Installing the Phillips head screws in this direction reduces the risk of scratching during use. Leave the hardware finger tight so that adjustments can be made during assembly and leveling.

6. Repeat step 5 for the other side of the bench. Again, leave the hardware finger tight.

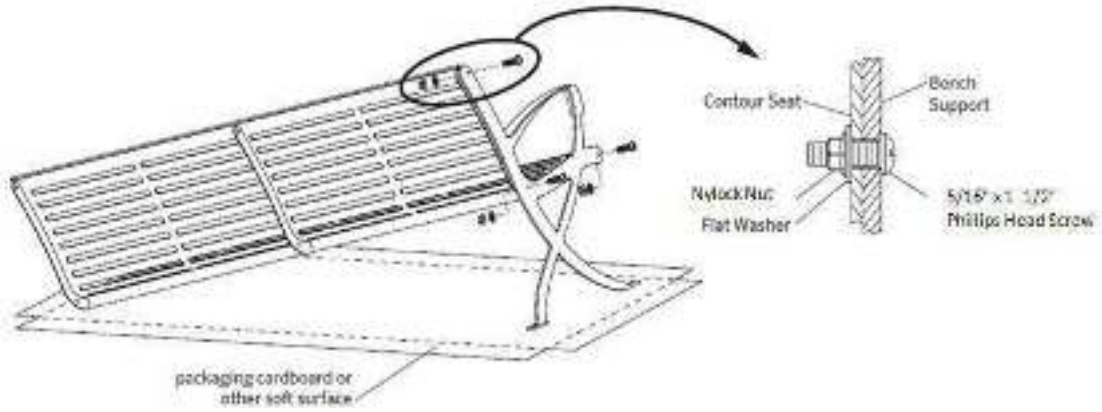

7. After all of the screws are installed, use the ½” open-end wrench, ½” box-end wrench or ratchet with a ½” socket to tighten.

8. Move the bench to the location where it will be used.

NOTE: **The feet of the bench include surface mounting holes for permanent installations.**

9. After two weeks, retighten all of the hardware.

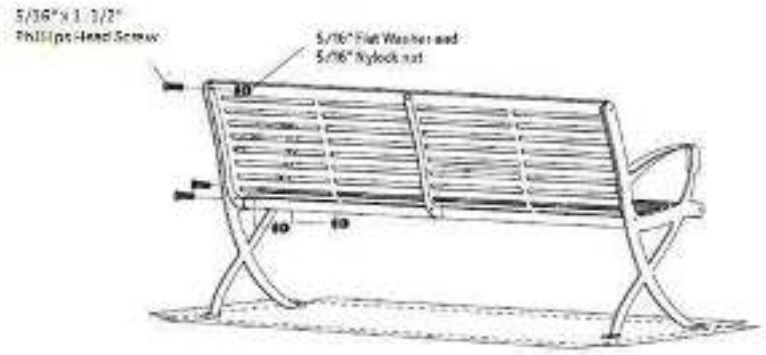

NOTE: Please contact Customer Care at 1-866-797-1761 to receive assistance in placing a replacement part order.

⚠ **WARNING**	• Furniture must not be used other than for its intended purpose and should be inspected regularly for loose, missing, or broken hardware, and general instability. • Furniture that is damaged or appears to be unstable must be removed from service and be repaired or replaced. • Repairs must be made using only factory authorized parts and methods.
CARE AND MAINTENANCE	• Do not drag the assembled unit across any surface. • This product requires only periodic cleaning with a sponge and a solution of mild detergent and water to remove surface dirt. Do not clean with a solvent or petroleum based products.

 Copyright 2016 ANOVA®

211 North Lindbergh Blvd.
St. Louis, MO 63141
800.231.1327 tel.| 314.754.0835 fax
specify@anovafurnishings.com
anovafurnishings.com

LEXF4— Exposition 4' Flat Bench

4' flat bench with steel slat seat and portable/surface mount legs

Material

The 4' flat bench is composed of a 10-gauge steel slat seat with a .5" wide slot pattern and steel legs. The bench is 49.85" long and will support 200 lbs. per linear foot.

The bench is designed to be portable for flexibility in placement or surface mounted using predrilled .4" diameter holes in feet to prevent movement. Mounting hardware is not included.

Finish

Steel slat seat is protected by the patented Fusion Advantage™ finish. The plastisol coating has an average thickness of .125" and is encapsulated with a richly tinted, high performance powder coating that won't rust, fade, peel, chip, crack, mold or mildew. The finish has been tested to the requirements of ASTM E1354 and determined to be in compliance with California Uniform Fire Code 1103.2.1.4.2.

Fade-resistant, powder coated steel legs and under supports features a state-of-the-art primer proven to prevent rusting. Treated components exceed the industry standard by 34% in testing by independent sources.

Color

See website or sales representative for color choices.

Assembly

The bench requires some assembly. Stainless steel assembly hardware is included.

Maintenance

The product is virtually maintenance-free and requires only periodic cleaning with a sponge and a solution of mild detergent and water to remove surface dirt. Do not clean with solvent or petroleum base products.

Warranty

20-year limited structural warranty with 7-year finish warranty from the date of purchase. See full details on multi-year warranties for components at *www.anovafurnishings.com/warranty.aspx*.

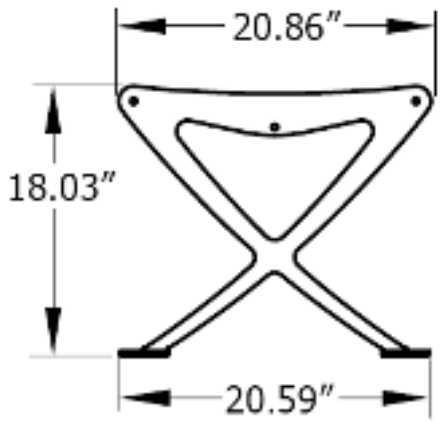

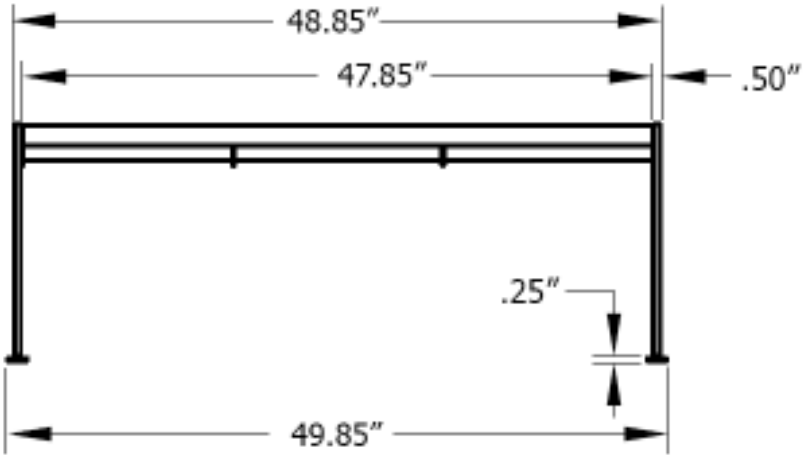

SHIPPING INFORMATION

Unit Weight	Unit Shipping Wt. UPS	Unit Shipping Wt. Truck (1+ Units)	Unit Ship Size w/Pallet	Max Units Per Pallet	Pallet Size/Wt. (32" x 48")	Total No. Pkgs.	Shipping Class
74 lbs.	N/A	80 lbs./unit	18 cu. ft.	6	50 lbs.	3	70

 Copyright 2015 ANOVA® Made in U.S.A

211 North Lindbergh Blvd.
St. Louis, MO 63141
800.231.1327 tel.| 314.754.0835 fax
specify@anovafurnishings.com
anovafurnishings.com

LEXF6— Exposition 6' Flat Bench

6' flat bench with steel slat seat and portable/surface mount legs

Material

The 6' flat bench is composed of a 10-gauge steel slat seat with a .5" wide slot pattern and steel legs. The bench is 74.25" long and will support 200 lbs. per linear foot.

The bench is designed to be portable for flexibility in placement or surface mounted using predrilled .4" diameter holes in feet to prevent movement. Mounting hardware is not included.

Finish

Steel slat seat is protected by the patented Fusion Advantage™ finish. The plastisol coating has an average thickness of .125" and is encapsulated with a richly tinted, high performance powder coating that won't rust, fade, peel, chip, crack, mold or mildew. The finish has been tested to the requirements of ASTM E1354 and determined to be in compliance with California Uniform Fire Code 1103.2.1.4.2.

Fade-resistant, powder coated steel legs and under supports features a state-of-the-art primer proven to prevent rusting. Treated components exceed the industry standard by 34% in testing by independent sources.

Color

See website or sales representative for color choices.

Assembly

The bench requires some assembly. Stainless steel assembly hardware is included.

Maintenance

The product is virtually maintenance-free and requires only periodic cleaning with a sponge and a solution of mild detergent and water to remove surface dirt. Do not clean with solvent or petroleum base products.

Warranty

20-year limited structural warranty with 7-year finish warranty from the date of purchase. See full details on multi-year warranties for components at *www.anovafurnishings.com/warranty.aspx*.

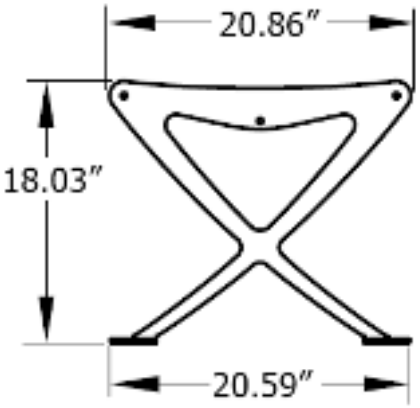

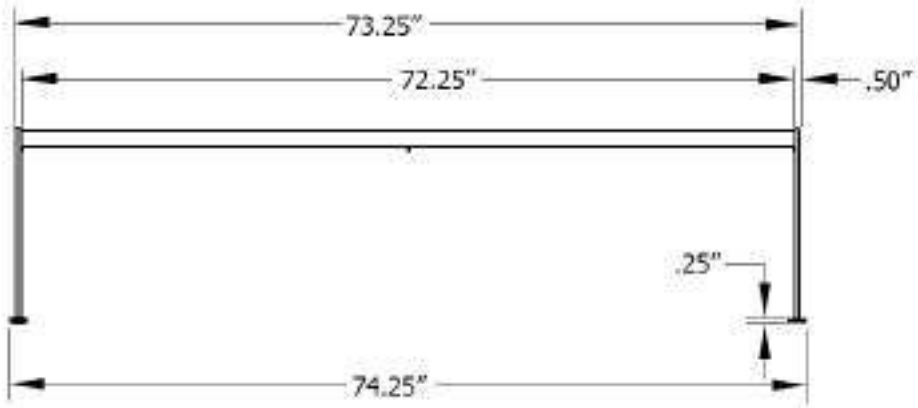

SHIPPING INFORMATION

Unit Weight	Unit Shipping Wt. UPS	Unit Shipping Wt. Truck (1+ Units)	Unit Ship Size w/Pallet	Max Units Per Pallet	Pallet Size/Wt. (32" x 74")	Total No. Pkgs.	Shipping Class
114 lbs.	N/A	120 lbs./unit	18 cu. ft.	6	100 lbs.	3	70

 Copyright 2015 ANOVA® Made in U.S.A

Assembly Instructions

LEXF4 Exposition 4' Flat Bench
LEXF5 Exposition 5' Flat Bench
LEXF6 Exposition 6' Flat Bench

anovafurnishings.com
888.535.5005 tel

TOOLS NEEDED:

- ½" Open-end or box-end wrench or ratchet with ½" socket
- Phillips head screwdriver

BENCH COMPONENTS:

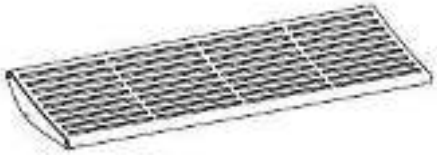

(1) Bench Seat

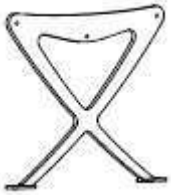

(2) Bench Supports

ASSEMBLY HARDWARE: All hardware is stainless steel.

(6) 5/16" x 1 1/2" Phillips Head Screws

(6) 5/16" Nylock Nuts

(6) 5/16" Flat Washers

(8) Plastic Rectangular Feet

(16) Adhesive Strips

ASSEMBLY:

1. Inspect the shipping container contents for damage and to determine that all components and hardware are present.

2. Assemble the bench over the shipping packaging or padded work area to avoid scratching the product.

NOTE: Before assembling the nuts to the screws, it is recommended that a light oil or petroleum jelly be applied to the screw threads.

3. Locate one of the bench supports and position it near the end of the seat. The mounting holes will not match up unless the bench seat is aligned to the bench supports in the proper orientation.

4. Apply two adhesive strips to one of the plastic rectangular feet. Then firmly apply the plastic rectangular to the metal foot of the bench support aligning the holes in each. Repeat for each of the remaining feet.

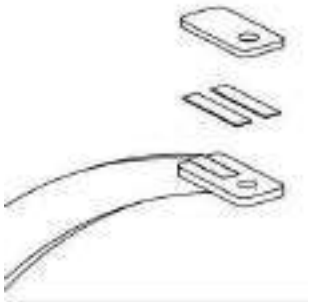

5. Align the mounting holes in the bench support with the holes on one end of the bench seat. Insert one of the 5/16” x 1 1/2” Phillips head screws through both parts, with the screw head on the outside surface of the bench support. Place a 5/16” flat washer and 5/16” Nylock nut on the inside end of the screw and finger tighten.

NOTE: Installing the Phillips head screws in this direction reduces the risk of scratching during use. Leave the hardware finger tight so that adjustments can be made during assembly and leveling.

6. Repeat step 5 for the other side of the bench. Again, leave the hardware finger tight.

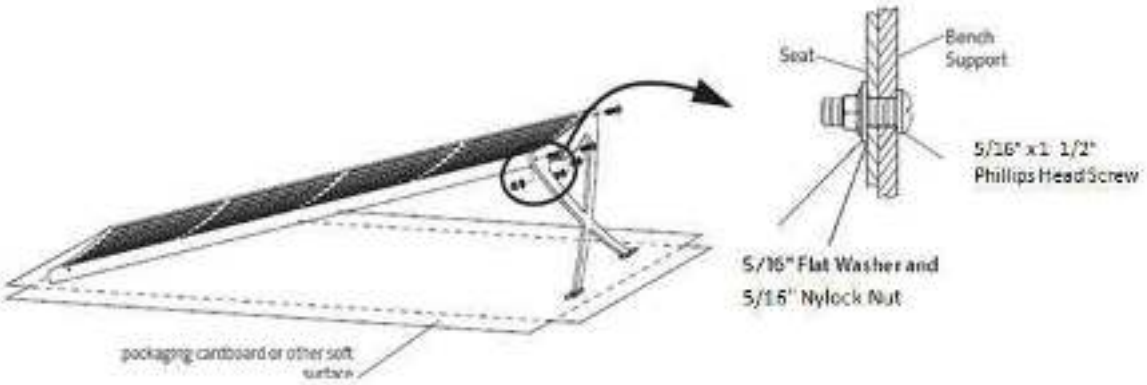

7. After all of the screws are installed, use the ½” open-end wrench, ½” box-end wrench or ratchet with a ½” socket to tighten.

8. Move the bench to the location where it will be used.

NOTE: **The feet of the bench include surface mounting holes for permanent installations.**

9. After two weeks, retighten all of the hardware.

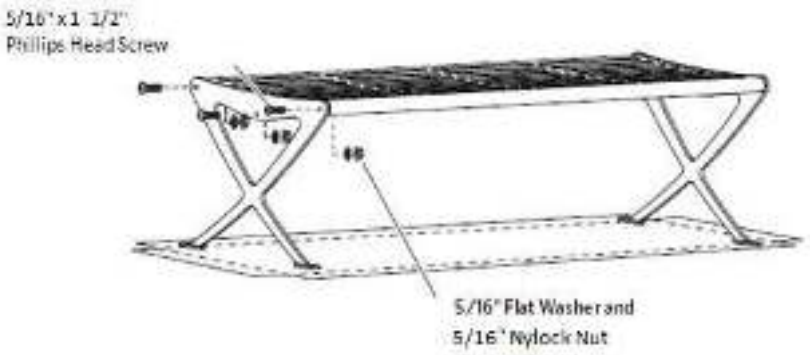

NOTE: Please contact Customer Care at 1-866-797-1761 to receive assistance in placing a replacement part.

⚠ **WARNING**	• Furniture must not be used other than for its intended purpose and should be inspected regularly for loose, missing, or broken hardware, and general instability. • Furniture that is damaged or appears to be unstable must be removed from service and be repaired or replaced. • Repairs must be made using only factory authorized parts and methods.
CARE AND MAINTENANCE	• Do not drag the assembled unit across any surface. • This product requires only periodic cleaning with a sponge and a solution of mild detergent and water to remove surface dirt. Do not clean with a solvent or petroleum based products.

 Copyright 2016 ANOVA®

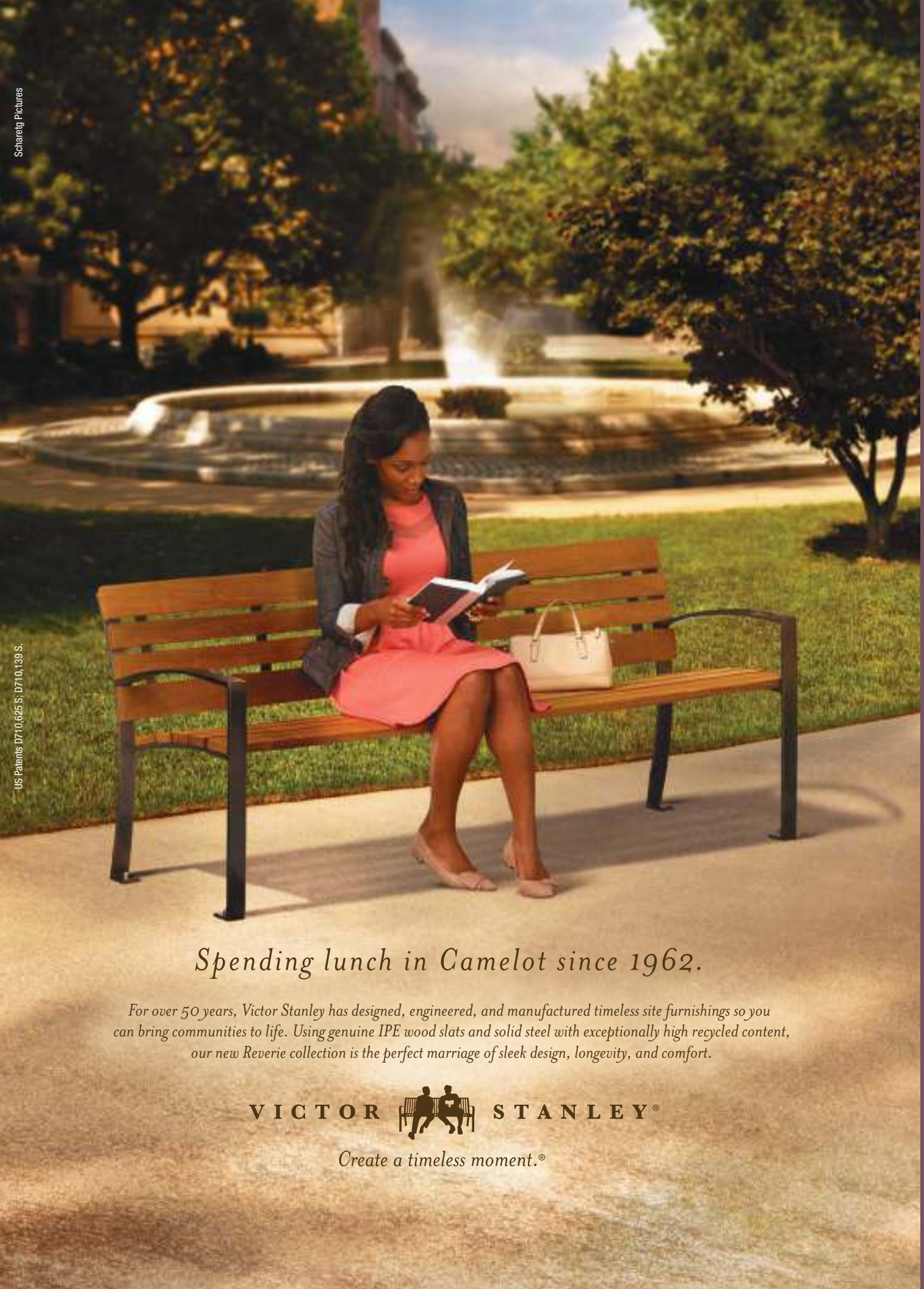
Scharetg Pictures
US Patents D710,625 S; D710,139 S.
REVERIE COLLECTION
EVA BENCHES + TABLES
Spending lunch in Camelot since 1962.
For over 50 years, Victor Stanley has designed, engineered, and manufactured timeless site furnishings so you can bring communities to life. Using genuine IPE wood slats and solid steel with exceptionally high recycled content, our new Reverie collection is the perfect marriage of sleek design, longevity, and comfort.
VICTOR STANLEY®
Create a timeless moment.®

The Reverie collection expresses simplicity, minimalism, and functionality. The Eva bench (patented) embodies the collection's attention to high quality design, craftsmanship, and comfort. Its slim profile, solid steel frame with exceptionally high recycled content, and use of genuine IPE wood slats, makes for sleek design, with longevity and comfort in mind. It's just one more way Victor Stanley helps you create the perfect setting for timeless moments.

EVA BENCH*
EVA BACKLESS BENCH

2, 4, 6 or 8 ft (.61, 1.2, 1.8 or 2.4 m) length. Wood slats. 8 ft (2.4 m) length includes center arm/leg.

*US Patents D710,625 S; D710,139 S.

OPTIONS

Surface mount. In-ground mount. Intermediate armrests (bolt-on) for 4 or 6 ft (1.2 or 1.8 m) length.

EVA TABLE

18 in (457 mm) height. Wood slats.
Model EVAT-22: 2 x 2 ft (.61 x .61 m).
Model EVAT-32: 3 x 2 ft (.91 x .61 m).
Model EVAT-33: 3 x 3 ft (.91 x .91 m).

EVAT-32

OPTIONS

Surface mount. In-ground mount.

See product specifications for further details. Drawings are not to scale. Natural wood colors will vary. Weathering may occur on site which will alter the color of the wood over time. Our TGIC powder-coating averages 8-10 mils (200-250 microns) thick and is applied in-house to ensure the highest level of quality. Offered in 12 standard and metallic colors, plus a full range of RAL colors with available color matching. Additional cost may apply.

Copyright 2015 Victor Stanley, Inc.® All rights reserved.

Patented.

EVAT-22

EVA-20

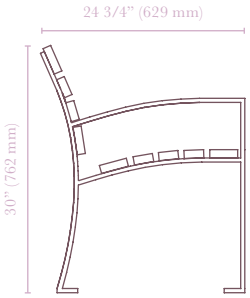

Patented.

EVAT-22, EVAT-32

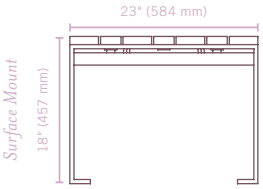

EVAT-33

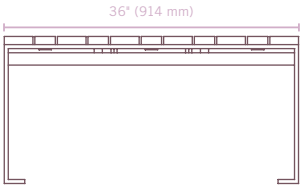

EVA-23

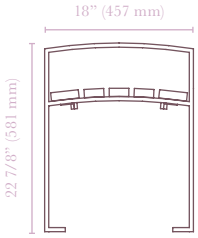

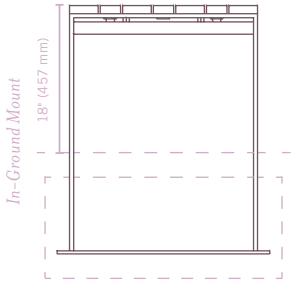

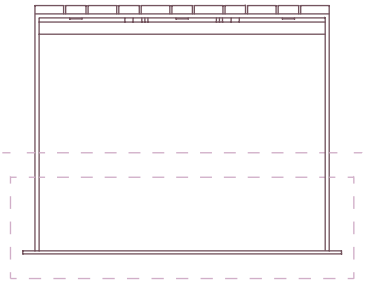

2 ft (.61 m) length. Patented.

EVAT-33

Victor Stanley, a leader in quality site furnishings, helps you bring your visions to life. From benches and litter receptacles to bike racks and planters, we meticulously design, engineer, and manufacture every detail to ensure our site furnishings will withstand the test of time. Founded over 50 years ago, we help create a place for people to gather, live life, and make timeless moments.

VICTOR STANLEY®

Create a timeless moment.®

P.O. Drawer 330, Dunkirk, MD 20754 1.800.368.2573 *(USA + Canada)* **TEL** 301.855.8300 **FAX** 410.257.7579 **VICTORSTANLEY.COM**

VICTOR STANLEY®

Create a timeless moment.®

P.O. DRAWER 330 - DUNKIRK, MD 20754 USA
TOLL FREE: (800) 368-2573 (USA & CANADA)
TEL (301) 855-8300 - FAX (410) 257-7579
WEB SITE: HTTP://WWW.VICTORSTANLEY.COM

* ALL DIMENSIONS ARE IN INCHES *

THIS PRODUCT IS COVERED BY THE FOLLOWING U.S. PATENTS D710,625

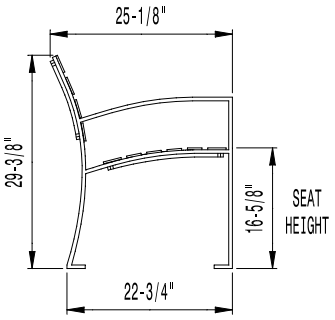

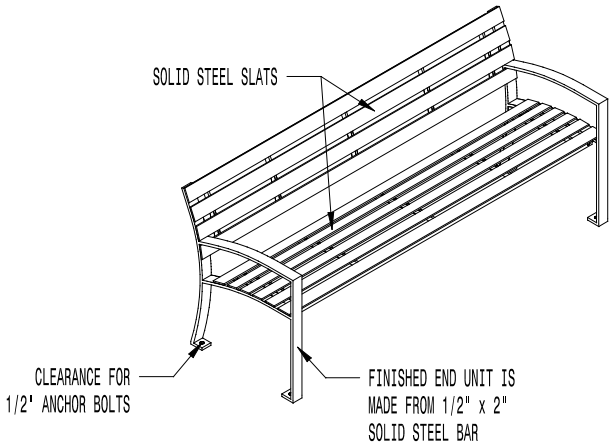

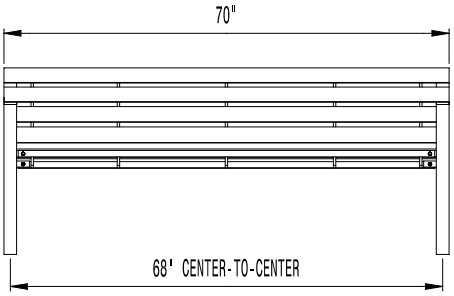

AVAILABLE OPTIONS:
POWDER COATING
10 STANDARD COLORS, 2 OPTIONAL METALLIC COLORS,
CUSTOM COLORS (INCLUDING THE RAL RANGE)

NOTES:

1. DRAWINGS NOT TO SCALE. DO NOT SCALE DRAWINGS.
2. ALL FABRICATED METAL COMPONENTS ARE STEEL SHOTBLASTED, ETCHED, PHOSPHATIZED, PREHEATED, AND ELECTROSTATICALLY POWDER-COATED WITH T.G.I.C. POLYESTER POWDER COATINGS. PRODUCTS ARE FULLY CLEANED AND PRETREATED, PREHEATED AND COATED WHILE HOT TO FILL CREVICES AND BUILD COATING FILM. COATED PARTS ARE THEN FULLY CURED TO COATING MANUFACTURER'S SPECIFICATIONS. THE THICKNESS OF THE RESULTING FINISH AVERAGES 8-10 MILS (200-250 MICRONS).
3. IT IS NOT RECOMMENDED TO LOCATE ANCHOR BOLTS UNTIL BENCH IS IN PLACE. THIS VICTOR STANLEY, INC. PRODUCT MUST BE PERMANENTLY AFFIXED TO THE GROUND. CONSULT YOUR LOCAL CODES FOR REGULATIONS.
4. ANCHOR BOLTS NOT PROVIDED BY VICTOR STANLEY, INC.
5. FOR HIGH SALT ABUSIVE CLIMATES, HOT-DIP GALVANIZING BEFORE POWDER COATING IS AVAILABLE. HOT-DIP GALVANIZING IS PERFORMED FOR VICTOR STANLEY, INC. BY AN EXPERIENCED QUALIFIED FIRM TO WHICH PRODUCTS ARE SHIPPED FOR GALVANIZING. HOT-DIP GALVANIZING INCLUDES AN AGGRESSIVE PRE-TREATMENT AND IMMERSION IN A TANK OF CHARGED LIQUID ZINC AT OR AROUND 860°F (460°C). THE RESULTING SURFACE IS RESISTANT TO RUST BUT HAS SOME UNEVENNESS RESULTING FROM THE BONDING OF THE ZINC TO THE STEEL SURFACE. AS A RESULT, THE POWDER-COATING SURFACE FINISH OVER THAT GALVANIZED SURFACE MAY EXHIBIT BUMPS, UNEVENNESS, AND MAY NOT BE AS SMOOTH AS THE STANDARD FINISH; THIS UNEVEN AND INCONSISTENT FINISH IS NORMAL FOR GALVANIZING. CONTACT MANUFACTURER FOR DETAILS.
6. ALL SPECIFICATIONS ARE SUBJECT TO CHANGE. CONTACT MANUFACTURER FOR DETAILS.
7. THIS PRODUCT IS SHIPPED PARTIALLY UNASSEMBLED.

EVA-20-F SPECIAL

REVERIE

EVA BENCH WITH STEEL SLATS
SHOWN: SPECIAL 6-FOOT LENGTH
SPECIAL STEEL SLAT CONSTRUCTION

COPYRIGHT 2017 VICTOR STANLEY, INC.® ALL RIGHTS RESERVED
REV. 6/14/17 DRAWN R.G.O. 2017-748

VICTOR STANLEY®

Create a timeless moment.®

P.O. DRAWER 330 - DUNKIRK, MD 20754 USA
TOLL FREE: (800) 368-2573 (USA & CANADA)
TEL (301) 855-8300 - FAX (410) 257-7579
WEB SITE: HTTP://WWW.VICTORSTANLEY.COM

* ALL DIMENSIONS ARE IN INCHES *

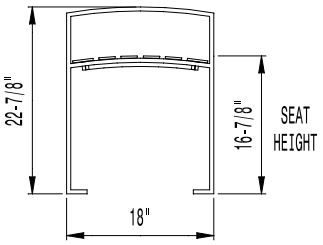

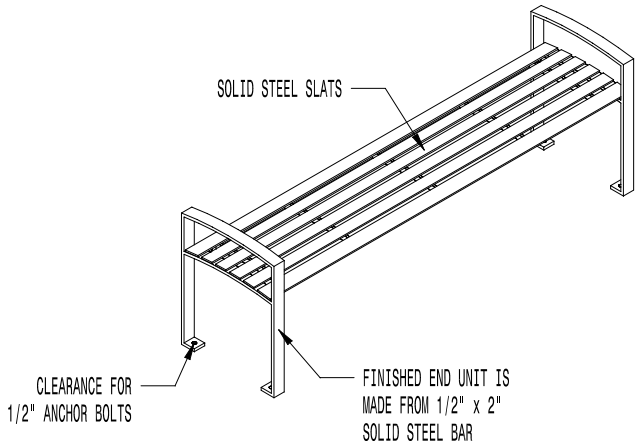

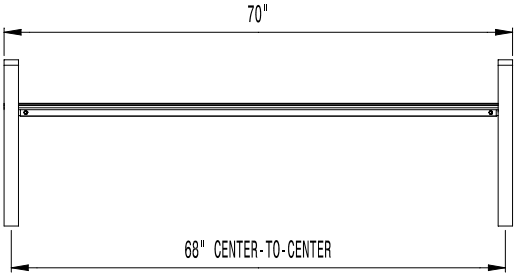

AVAILABLE OPTIONS:
POWDER COATING
10 STANDARD COLORS, 2 OPTIONAL METALLIC COLORS,
CUSTOM COLORS (INCLUDING THE RAL RANGE)

NOTES:

1. DRAWINGS NOT TO SCALE. DO NOT SCALE DRAWINGS.
2. ALL FABRICATED METAL COMPONENTS ARE STEEL SHOTBLASTED, ETCHED, PHOSPHATIZED, PREHEATED, AND ELECTROSTATICALLY POWDER-COATED WITH T.G.I.C. POLYESTER POWDER COATINGS. PRODUCTS ARE FULLY CLEANED AND PRETREATED, PREHEATED AND COATED WHILE HOT TO FILL CREVICES AND BUILD COATING FILM. COATED PARTS ARE THEN FULLY CURED TO COATING MANUFACTURER'S SPECIFICATIONS. THE THICKNESS OF THE RESULTING FINISH AVERAGES 8-10 MILS (200-250 MICRONS).
3. IT IS NOT RECOMMENDED TO LOCATE ANCHOR BOLTS UNTIL BENCH IS IN PLACE. THIS VICTOR STANLEY, INC. PRODUCT MUST BE PERMANENTLY AFFIXED TO THE GROUND. CONSULT YOUR LOCAL CODES FOR REGULATIONS.
4. ANCHOR BOLTS NOT PROVIDED BY VICTOR STANLEY, INC.
5. FOR HIGH SALT ABUSIVE CLIMATES, HOT-DIP GALVANIZING BEFORE POWDER COATING IS AVAILABLE. HOT-DIP GALVANIZING IS PERFORMED FOR VICTOR STANLEY, INC. BY AN EXPERIENCED QUALIFIED FIRM TO WHICH PRODUCTS ARE SHIPPED FOR GALVANIZING. HOT-DIP GALVANIZING INCLUDES AN AGGRESSIVE PRE-TREATMENT AND IMMERSION IN A TANK OF CHARGED LIQUID ZINC AT OR AROUND 860°F (460°C). THE RESULTING SURFACE IS RESISTANT TO RUST BUT HAS SOME UNEVENNESS RESULTING FROM THE BONDING OF THE ZINC TO THE STEEL SURFACE. AS A RESULT, THE POWDER-COATING SURFACE FINISH OVER THAT GALVANIZED SURFACE MAY EXHIBIT BUMPS, UNEVENNESS, AND MAY NOT BE AS SMOOTH AS THE STANDARD FINISH; THIS UNEVEN AND INCONSISTENT FINISH IS NORMAL FOR GALVANIZING. CONTACT MANUFACTURER FOR DETAILS.
6. ALL SPECIFICATIONS ARE SUBJECT TO CHANGE. CONTACT MANUFACTURER FOR DETAILS.
7. THIS PRODUCT IS SHIPPED PARTIALLY UNASSEMBLED.

EVA-23-F SPECIAL

REVERIE

EVA BENCH WITH STEEL SLATS
SHOWN: SPECIAL 6-FOOT LENGTH
SPECIAL STEEL SLAT CONSTRUCTION

COPYRIGHT 2017 VICTOR STANLEY, INC.® ALL RIGHTS RESERVED
REV. 6/14/17 DRAWN R.G.O. 2017-749

BISTRO

SEATS - dining height

5001 - CLASSIQUE CHAIR

Steel frame
Curved lacquered natural beech slats
Plastic clips for slow, safe folding and unfolding
Electro-galvanized one-piece steel cross-beams
Available in 2 colours

○ 01 Cotton White ● 02 Cedar Green

Accessories: Bistro Basics cushion p.123

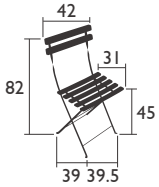

4 KG

6301 - DURAFLON® CHAIR

Steel frame
High-quality Duraflon® resin curved slats
Plastic clips for slow, safe folding and unfolding
Electro-galvanized one-piece steel cross-beams
Available in 2 colours

○ 01 Cotton White ● 02 Cedar Green

Accessories: Bistro Basics cushion p.123

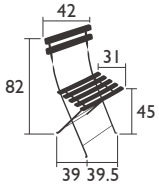

4 KG

5107 - NATUREL CHAIR

Steel frame
Natural beech curved slats, treated with Textrol®
Plastic clips for slow, safe folding and unfolding
Electro-galvanized one-piece steel cross-beams

Accessories: Bistro Basics cushion p.123

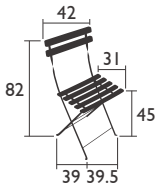

4 KG

0101 - METAL CHAIR

Steel frame
Curved slats made from galvanised steel
Plastic clips for slow, safe folding and unfolding
Electro-galvanized one-piece steel cross-beams

Accessories: Bistro Basics cushion p.123

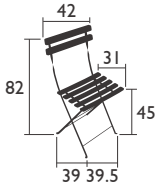

4.8 KG

*Very High Protection treatment recommended for Contract use

landscapeforms®

verona™

A perfect balance of style and strength, Verona is an excellent chair for interior or exterior use. Sturdy, yet easily moved, this Robert Chipman-designed chair is also stackable for simple, easy storage.

Metal is the world's most recycled material and is fully recyclable. Powdercoat finish on metal parts contains no heavy metals, is HAPS-free and has extremely low VOCs. Consult our website for recycled content for this product.

Our Purpose Is To Enrich Outdoor Spaces

We believe in the power of design and its ability to influence and elevate the quality of public space. High quality products and outstanding customer experience makes us one of the world's premier designers and manufacturers of outdoor commercial furnishings.

Verona™ Specifications

Frame is 3/4" tubular steel. Dimensions are 25" deep, and 30" tall. Width is 20" without arms, 23" with arms. Seat height is 17". Seat insert may be specified in metal grid or perforated metal.

chair	chair with armrests	
25" x 20" x 30"	**25" x 23" x 30"**	d x w x h

Perforated metal seats are securely welded to the frame and all metal parts are finished with Landscape Forms' exclusive Pangard II® polyester powdercoat.

Grid metal seats are securely welded to the frame and all metal parts are finished with Landscape Forms' exclusive Pangard II® polyester powdercoat.

Finishes

All metal parts are finished with Landscape Forms' propriety Pangard II® polyester powdercoat, a hard yet flexible finish that resists rusting, chipping, peeling and fading. Call for standard color chart.

To Specify

Select Verona chair with or without armrests. Choose seat inset: metal grid or perforated metal. Choose powdercoat color for metal. Chairs are stackable.

www.landscapeforms.com

Download product photos, brochures, color charts, SketchUp components, Technical information, CAD details, CSI Specifications, Assembly Instructions.

Verona chairs meet ANSI/BIFMA performance and safety standards.

Verona chairs are designed by Robert Chipman, ASLA.
Specifications are subject to change without notice.
Verona chairs are manufactured in U.S.A.
Landscape Forms supports the LAF at the Second Century level.
©2007 Landscape Forms, Inc. Printed in U.S.A.

landscapeforms®
800.521.2546 269.381.3455 fax
431 Lawndale Ave., Kalamazoo, MI 49048
www.landscapeforms.com

7800 E. Michigan Ave.
Kalamazoo, Michigan 49048
Phone: (800) 521-2546
Fax: (269) 381-3455
www.landscapeforms.com
specify@landscapeforms.com

Parc Centre Table
Product Guide Specification

Specifier Notes: This product guide specification is written according to the Construction Specifications Institute (CSI) 3-Part Format, including *MasterFormat, SectionFormat,* and *PageFormat,* as described in *The Project Resource Manual—CSI Manual of Practice, Fifth Edition.*

The section must be carefully reviewed and edited by the Architect to meet the requirements of the project and local building code. Coordinate this section with other specification sections and the Drawings. Delete all "Specifier Notes" after editing this section.

Section numbers are from *MasterFormat 2010 Edition*.

SECTION 12 93 43.53 SITE SEATING AND TABLES

Specifier Notes: This section covers Landscape Forms, Inc. "Parc Centre ®" tables. Consult Landscape Forms, Inc. for assistance in editing this section for the specific application.

PART 1 GENERAL

1.1 SECTION INCLUDES

A. Tables.

1.2 REFERENCES

Specifier Notes: List standards referenced in this section, complete with designations and titles. Delete standards not included in the edited section. This article does not require compliance with standards, but is merely a listing of those used.

A. ASTM Testing Standards:
1. ASTM B 117 – Standard Practice for Operating Salt Spray (Fog) Apparatus.
2. ASTM D 522 – Standard Test Methods for Mandrel Bend Test of Attached Organic Coatings.
3. ASTM D 523 – Standard Test Method for Specular Gloss.
4. ASTM D 2247 – Standard Practice for Testing Water Resistance of Coatings in 100% Relative Humidity.
5. ASTM D 2794 – Standard Test Method for Resistance of Organic Coatings to the Effects of Rapid Deformation (Impact).
6. ASTM D 3359 – Standard Test Methods for Measuring Adhesion by Tape Test.
7. ASTM D 3363 – Standard Test Method for Film Hardness by Pencil Test.
8. ASTM G 155 – Standard Practice for Operating Xenon Arc Light Apparatus for Exposure of Non-Metallic Materials.

B. ISO Testing Standards:

1. ISO 1520 – Paints and Varnishes – Cupping Test.
2. ISO 2815 – Paints and Varnishes – Buchholz Indentation Test.

1.3 SUBMITTALS

A. Product Data: Submit manufacturer's product data, storage and handling requirements and recommendations, installation methods and available colors, styles, patterns and textures.
B. Shop Drawings: Submit manufacturer's shop drawings, including plans and elevations, indicating overall dimensions.
C. Samples: Submit manufacturer's samples of materials, finishes, and colors.
D. Warranty: Manufacturer's standard warranty.

1.4 QUALITY ASSURANCE

A. Manufacturer's Qualifications: Manufacturer regularly engaged in manufacture of site furnishings since 1969.
B. Product Support: Products are supported with complete engineering drawings and design patents.
C. Base Worth: An installed base of products worth in excess of one hundred million dollars.
D. Assets: Excess of twenty million dollars in assets.
E. Production: Orders are filled within a 40-day schedule.
F. Facility Operator: Welders and machine operators are certified.

1.5 DELIVERY, STORAGE, AND HANDLING

A. Delivery: Deliver materials to site in manufacturer's original, unopened containers and packaging, with labels clearly identifying product name and manufacturer.
B. Storage: Store materials in clean, dry area in accordance with manufacturer's instructions. Keep materials in manufacturer's original, unopened containers and packaging until installation.
C. Handling: Protect materials and finish during handling and installation to prevent damage.

1.6 WARRANTY

A. Warranty Information:

-Products will be free from defects in material and/or workmanship for a period of three years from the date of invoice.

-The warranty does not apply to damage resulting from accident, alteration, misuse, tampering, negligence, or abuse.

- Landscape Forms, Inc. shall, at its option, repair, replace, or refund the purchase price of any items found defective upon inspection by an authorized Landscape Forms service representative.

-Purchasers should be aware that normal use of these high quality products can result in superficial damage affecting the finish. Scratches, nicks, and dents are to be considered normal wear and tear, and are not the responsibility of the manufacturer.

PART 2 PRODUCTS

2.1 MANUFACTURER

A. Landscape Forms, Inc., 7800 E. Michigan Ave, Kalamazoo, Michigan 49048.
Phone: (800) 521-2546. Fax (269) 381-3455. Website www.landscapeforms.com
E-mail: specify@landscapeforms.com

2.2 TABLES

A. "Parc Centre" Tables
B. Style:

Specifier Notes: Specify style & size of table top.

1. Square:

-Square: 28 inches.

2. Round:
   a. Diameter: 24 inches.
   b. Diameter: 30 inches.

C. Size:
   1. Height: 29-1/2 inches.

Specifier Notes: Specify mounting of tables.

D. Mounting:
   1. Surface mounted.
   2. Free standing with adjustable levelers.

2.3 MATERIALS

A. Table Top: Table tops are made from solid 5/16 steel plate welded to the table support.

B. Table Support: 2-1/2" outer diameter x 0.120" wall steel tubing. Base plate 17" outer diameter x 0.375" steel.

2.4 ACCESSORIES

Specifier Notes: Specify anchor bolts for surface-mounted tables. Delete for free-standing tables.

A. Anchor Bolts: Corrosion resistant recommended, not supplied by the manufacturer.

2.5 RECYCLED CONTENT

A. Parc Centre Table:
   -Recycled Material Content: Minimum 90.7 percent.
   -Post-Consumer Material Content: Minimum 58.9 percent.
   -Pre-Consumer Material Content: Minimum 31.8 percent.
   -Recyclable: 100 percent.

2.6 FINISHES

A. Finish on Carbon Steel: Landscape Forms, Inc. "Pangard II".
   1. Primer: Rust inhibitor.
   2. Topcoat: Thermosetting polyester powdercoat. UV, chip, and flake resistant.
   3. Test Results: "Pangard II".
      a. Gloss, Garner 60 Degrees, ASTM D 523: Plus or minus 5.
      b. UV Resistance, Color and Gloss, ASTM G 155, Cycle 7: Delta E less than 2 at 2.0 mils and less than 20 percent loss.
      c. Cross-Hatch Adhesion, ASTM D 3359, Method B: 100 percent pass.
      d. Flexibility Test, Mandrel, ASTM D 522: 3 mm at 2 mils.
      e. Erichsen Cupping, ISO 1520: 8 mm.
      f. Impression Hardness, Buchholz, ISO 2815: 95.
      g. Impact Test, ASTM D 2794: 60 inches/pound at 2.5 mils.
      h. Pencil Hardness, ASTM D 3363: 2H minimum.
      i. Corrosion Resistance, 1,500-Hour Test, ASTM B 117: Max undercutting 1 mm.
      j. Humidity Resistance, 1,500-Hour Test, ASTM D 2247: Max blisters 1 mm.

Specifier Notes: Specify color of metal finish. Consult Landscape Forms, Inc. for selection of standard colors and availability of custom colors.

   4. Color: _____ .

PART 3 EXECUTION

Specifier Notes: Edit Part 3 Execution if tables are to be free standing and not surface mounted.

3.1 EXAMINATION

A. Examine areas to receive tables.
B. Notify Architect of conditions that would adversely affect installation or subsequent use.
C. Do not begin installation until unacceptable conditions are corrected.

3.2 INSTALLATION

A. Install tables in accordance with manufacturer's instructions at locations indicated on the Drawings.
B. Install tables plumb and level.
C. Anchor tables securely in place.

3.3 ADJUSTING

A. Finish Damage: Repair minor damages to finish in accordance with manufacturer's instructions and as approved by Architect.
B. Component Damage: Remove and replace damaged components that cannot be successfully repaired as determined by Architect.

3.4 CLEANING

A. Clean tables promptly after installation in accordance with manufacturer's instructions.
B. Do not use harsh cleaning materials or methods that could damage finish.

3.5 PROTECTION

A. Protect installed tables to ensure that, except for normal weathering, tables will be without damage or deterioration at time of Substantial Completion.

END OF SECTION

Instructions

Assembly
Installation
Operation

7/2007

Parc Centre™ Tables

Product Assembly:
All Parc Centre™ tables are shipped fully assembled, no assembly is required

WARNING! TO AVOID INJURY TO PERSONS HANDLING TABLES, USE TWO PERSONS TO TEAM LIFT AND CARRY.

HANDLE WITH CARE! Pangard II® Polyester Powdercoat is a strong, long-lasting finish. To protect this finish during assembly, place unwrapped powdercoated parts on packaging foam or other non-marring surface. Do not place or slide powdercoated parts on cement or other hard or textured surface – this will damage the finish causing rust to occur. Use touch-up paint on any gouges in the finish caused by assembly tools.

Recommended Procedures for Mounting to Hard-Surfacing:
NOTE: The anchoring procedure and hardware are the responsibility of the installer, we suggest the following.

Freestanding Table Procedure:

1. Place table in desired position.
2. Adjust levelers on glides to level table. All 4 glides must be touching the mounting surface to provide a stable table.

Surface Mounting Procedure:

1. Place table in desired position and rotation.
2. Mark hole locations through holes in base.
3. Move unit to allow access for drilling holes.
4. Drill holes at marked position for appropriate anchors. Note: Anchors must be no larger than 3/8" diameter. Non-corrosive anchoring hardware is recommended.
5. Although anchoring procedure and hardware is the responsibility of the installer, Landscape Forms suggests the following:
   - Poured concrete: 3/8" diameter, stud type expansion anchor, minimum of 2-1/2" long.
   - Pavers: If pavers are installed over poured concrete, use 3/8" diameter stud type expansion anchor with enough length to go through brick and into concrete.
   - Wood deck (at least 2" nominal thickness): 3/8" diameter hex head lag bolt, at least 2-1/2" long.
6. If using expansion anchors, install anchor leaving approximately 1/2" thread protruding from the table base. Place table in position, install hex nut with washer and tighten gently to prevent marring finish.
7. If using lag bolts, place table in position and install lag with washer. Tighten gently to prevent marring finish.

431 Lawndale Avenue, Kalamazoo, MI 49048
PH. 800.521.2546, PH. 269.381.0395, FX. 269.381.3455

HUNTCO
SITE FURNISHINGS

Bike racks, lockers, benches and architectural site furnishings since 1980.

Tradition & Innovation

PHONE 503.224.8700
FAX 503.274.2055
EMAIL Sales@Huntco.com
WEB Huntco.com
TWITTER @Huntcosupply
MAIL P.O. Box 10385
Portland, Or. 97296-0385

× 2

THE ARC

The Arc rack, a sleek, modern curve that won't overwhelm other architectural elements.

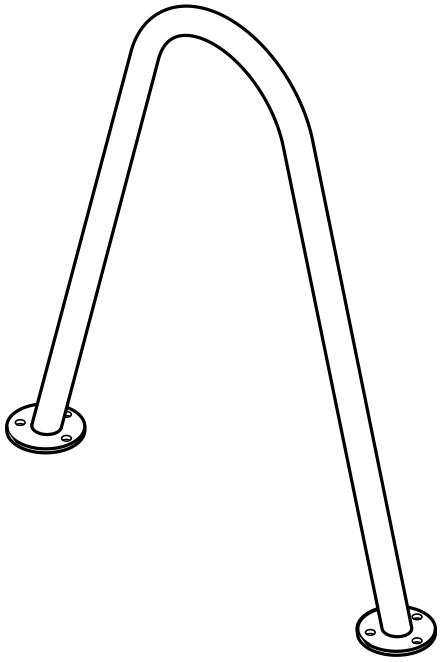

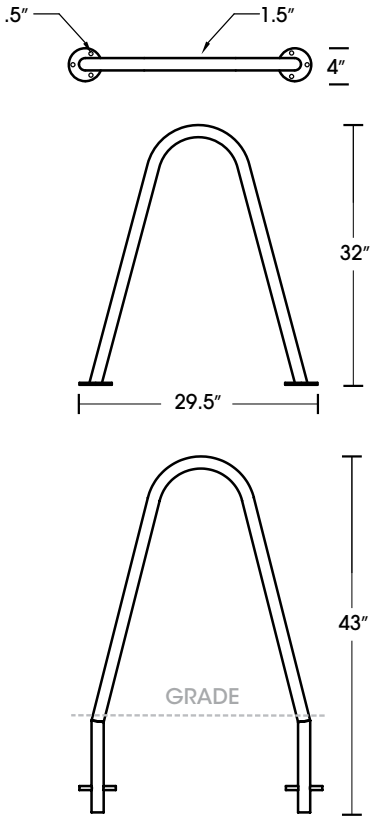

Flange or In-Ground

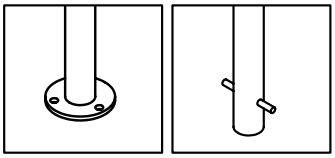

CONSTRUCTION/MATERIAL

- 1.50” Steel Tubing
- 4” Steel Flanges

DIMENSIONS

- 29.5" Length
- 4" Width
- 32" Height

MOUNTING OPTIONS

☐ Flange Mount (Shown)
(6) .5" Mounting Holes

☐ In-Ground
11" Leg Extensions

FINISH OPTIONS

☐ T304 Stainless Steel
#4 Satin Finish

☐ Hot Dipped Galvanized

☐ Powder Coating
_____

☐ Thermoplastic Coating
_____

RECOMMENDED LAYUT

NOTES:

"Bike" is 70"
Minimum Spacing
(#) Recommended Spacing

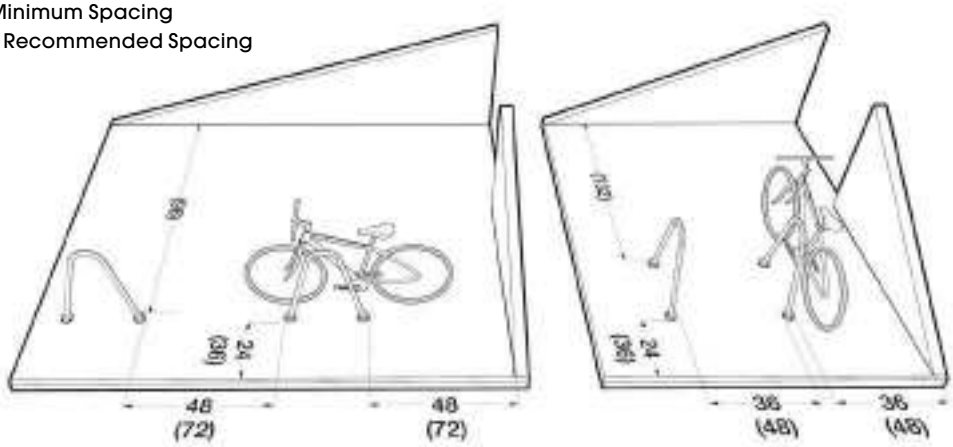

CONTRACTOR: _____

JOB: _____

NOTES: _____

Manufactured in the Pacific Northwest

DOWNTOWN RACK

Security Is So Square

The Downtown Rack uses thick, square-tube construction that can't be cut with a pipe cutter. The extended width of the Downtown Rack makes for easy bike parking by giving the bike full support and multiple locking points for a u-style bike lock.

DERO
A PLAYCORE Company

© 2016 Dero

DOWNTOWN RACK

YOUR LOGO HERE

Customize the Downtown Rack and brand your bike parking

FINISH OPTIONS

Galvanized

Stainless

PVC Dip

Powder Coat

White	Black	Light Gray RAL 7042	Deep Red RAL 3003	Yellow RAL 1023
CNH Bright Yellow	Orange RAL 2004	Blue RAL 5005	Sky Blue RAL 5015	Hunter Green RAL 6005
Light Green RAL 6018	Green RAL 6016	Sepia Brown RAL 8014	Bronze	Silver 9007
Dark Purple	Flat Black	Wine Red RAL 3005	Beige RAL 1001	Iron Gray 7011

Thermoplastic

Black	Green	Red	Blue	Gray	Brown

MOUNT OPTIONS

Surface

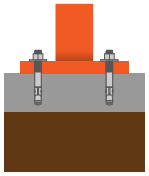

In-Ground

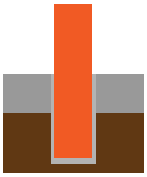

Rail

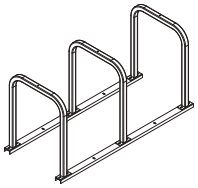

www.dero.com | 1-888-337-6729

DERO
A PLAYCORE Company

© 2016 Dero

DOWNTOWN RACK
Submittal Sheet

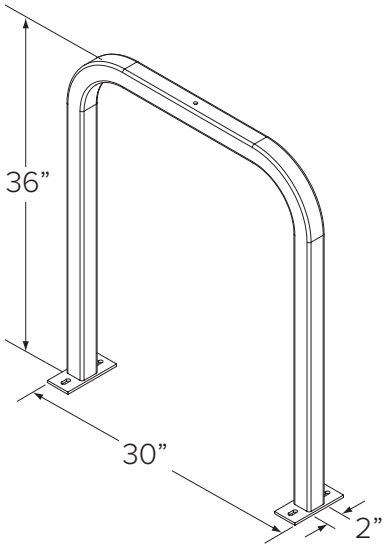

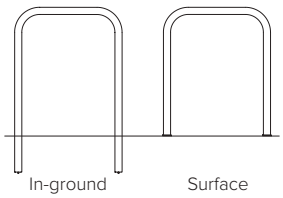

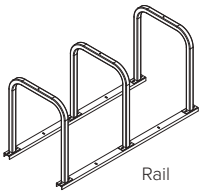

CAPACITY 2 Bikes

MATERIALS

☐ **Standard**
2” x 2” x .188” square tube - mild steel
2” x 2” x .120” square tube - stainless steel

☐ **Lightweight**
***Powder coat or galvanized only**
2” x 2” x .083” square tube - mild steel

FINISHES

☐ **Galvanized**
An after fabrication hot dipped galvanized finish is our standard option.

☐ **Powder Coat**
Our powder coat finish assures a high level of adhesion and durability by following these steps:
1. Sandblast
2. Epoxy primer electrostatically applied
3. Final thick TGIC polyester powder coat

☐ **Thermoplastic**
In addition to an increased thickness (8-10mils), the thermoplastic finish covers a galvanized layer and offers superior impact resistance over powder coating.

☐ **PVC Dip** (plastisol)
Other colors available by special order (minimum orders apply)

☐ **Stainless**
Stainless Steel: 304 grade stainless steel material finished in either a high polished shine or a satin finish.

MOUNT OPTIONS

☐ **In-ground**
In ground mount is embedded into concrete base. Specify in ground mount for this option.

☐ **Surface**
Foot Mount has two 2.5”x6”x.25” feet with two anchors per foot. Specify foot mount for this option.

☐ **Rail**
Rail Mounted Downtown Racks are bolted to two parallel rails which can be left freestanding or anchored to the ground. Rails are heavy duty 3”x1.4”x3/16” thick galvanized mounting rails. Specify rail mount for this option.

© 2016 Dero

DOWNTOWN RACK

Setbacks

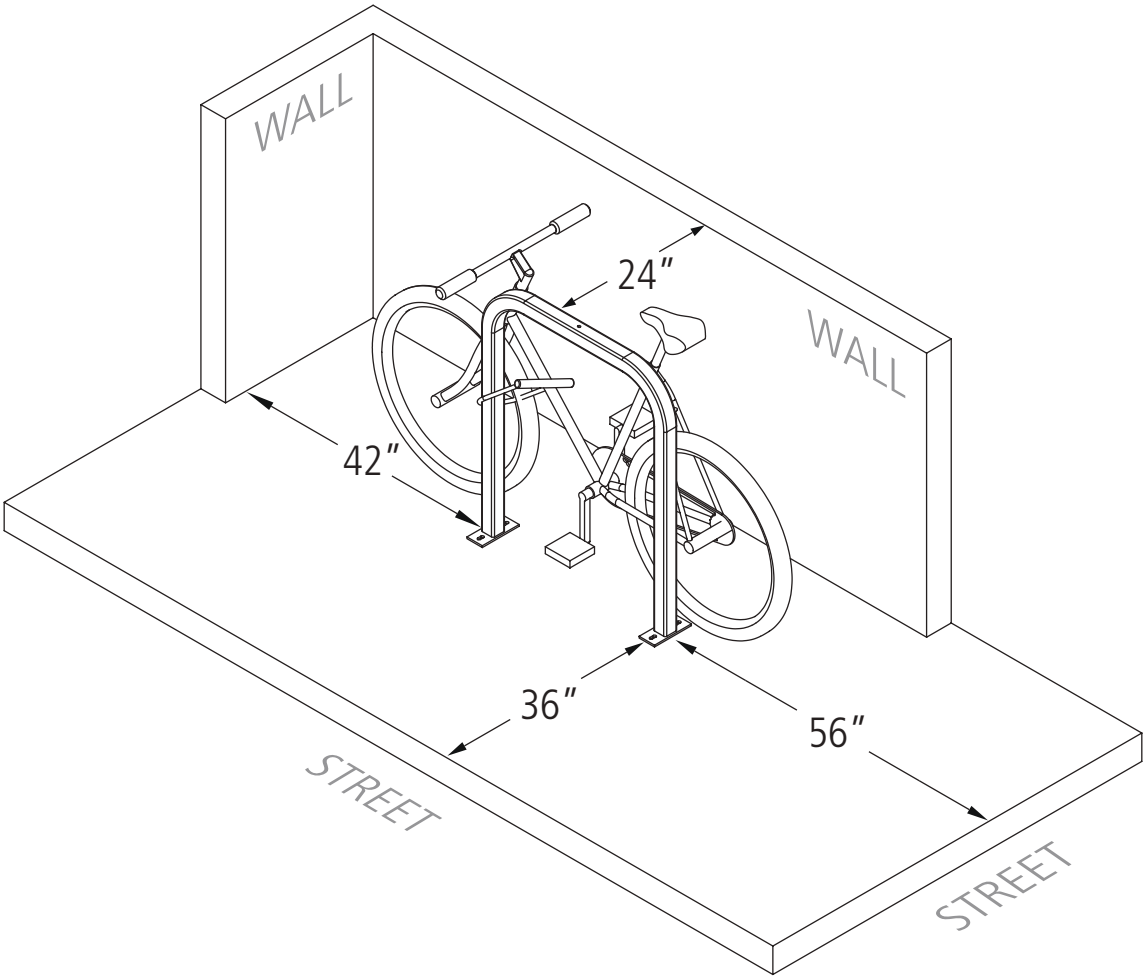

© 2016 Dero

DOWNTOWN RACK

Installation Instructions –Surface Mount

TOOLS NEEDED

Tape Measure
Marker or Pencil
Masonry Drill Bit
Drill (Hammer drill recommended)
Hammer
Wrench 9/16”
Level

RECOMMENDED BASE MATERIAL

Solid concrete is the best base material for installation. To ensure the proper anchors are shipped with your rack, ask your Dero Rack representative which anchor is appropriate for your application. Be sure nothing is underneath the base material that could be damaged by drilling.

1

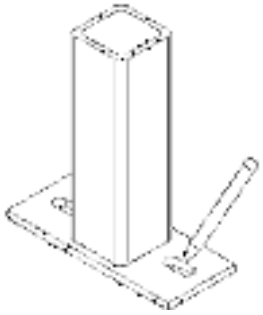

Place the rack in the desired location. Use a marker or pencil to outline the holes of the flange onto the base material.

2

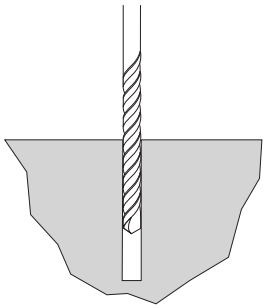

Drill 3/8” diameter holes 3” deep into surface. Make sure the holes are at least 3” away from any cracks in the base material.

3

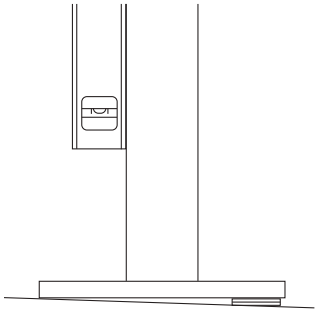

Place rack (and washers to level rack if necessary) over holes.

4

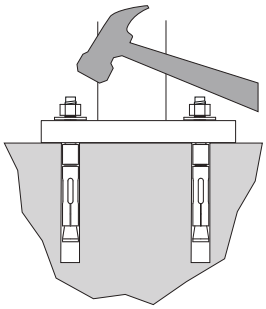

Thread nuts onto anchors, leaving approximately 1/4” of the anchor protruding, and tap into surface. Tighten nuts down to secure rack.

© 2016 Dero

DOWNTOWN RACK

Installation Instructions – In Ground Mount

TOOLS NEEDED

Level
Cement mixing tub
Shovel
Trowel
Hole coring machine with 4” bit
Access to water hose
Materials to build brace (see “Install Tip” at bottom of page)

INSTALLING INTO EXISTING SIDEWALK

Core holes no less than 3” diameter (4” recommended) and 10” deep into sidewalk. Fill holes with Por-Rok or epoxy grout. Place rack into holes, making sure the rack is level. 33”-36” of the rack should remain above the surface. If the rack is less than 33” high, it will not support the bike adequately. Make sure the rack is level and held in place until the grout has set.

INSTALLING INTO A NEW SIDEWALK

1

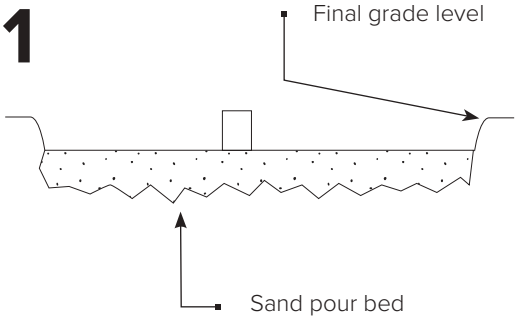

Place corrosion resistant sleeve (min. 3” inside diameter) in sand pour bed in exact location where rack will be installed. Make sure top of sleeve is at same level as desired finished concrete surface. Fill sleeve with sand to keep it in place and prevent it from filling with concrete.

2

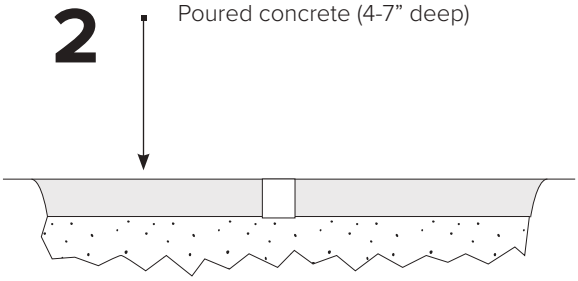

Pour concrete and allow to cure.

3

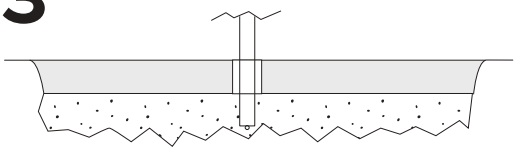

After appropriate cure time, dig out sand from sleeves and insert racks, making sure they are level and at the appropriate height. Pour in Por-Rok or epoxy grout and allow to set.

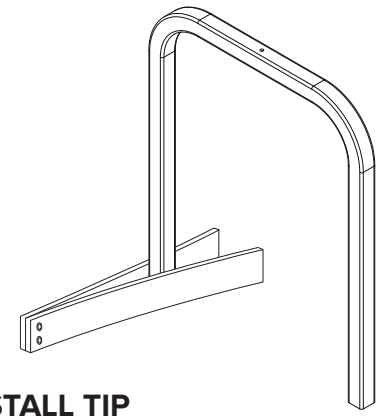

INSTALL TIP

An easy way to brace the rack while the grout sets is to bolt two 1x4” boards together at one end and clamp them onto the rack like a clothes pin.

DERO A PLAYCORE Company

www.dero.com | 1-888-337-6729

© 2016 Dero

DOWNTOWN RACK

Rail Mounted Options

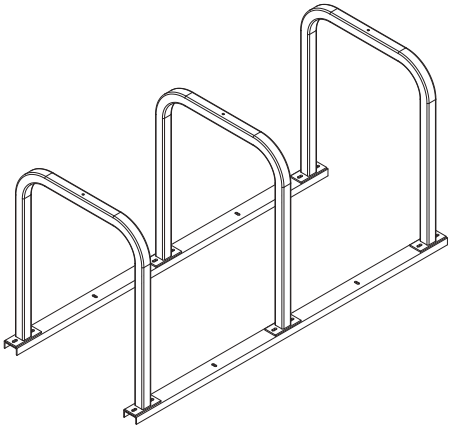

RAIL MOUNTED OPTIONS

Rail mounted Downtown Racks are standard foot mounted Downtown Racks attached with bolts to a rail as in the diagram at left. Rail mounted racks provide more flexibility than other mounting options while providing the same degree of security.

Rail mounted Downtown Racks can be left freestanding, or they can be anchored to the ground using several anchors. This option allows for easier snow removal and sweeping. Installation of Rail mounted Hoops is also much less expensive than embedding the racks into the ground.

* Note: Though racks may be painted, the rails will remain with only a galvanized finish

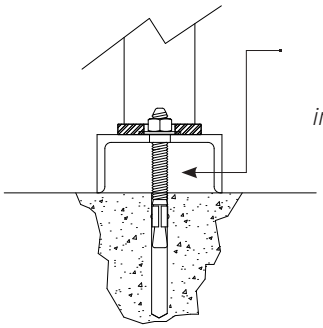

ADVANTAGES:

- Easier and inexpensive installation
- Can be left freestanding or anchored to the ground
- Easier to remove for sweeping and snow removal

APPLICATIONS:

- Installation to pavers
- Asphalt Installations
- Ground, dirt, or mulch
- Situations where the rack needs to be moved occasionally

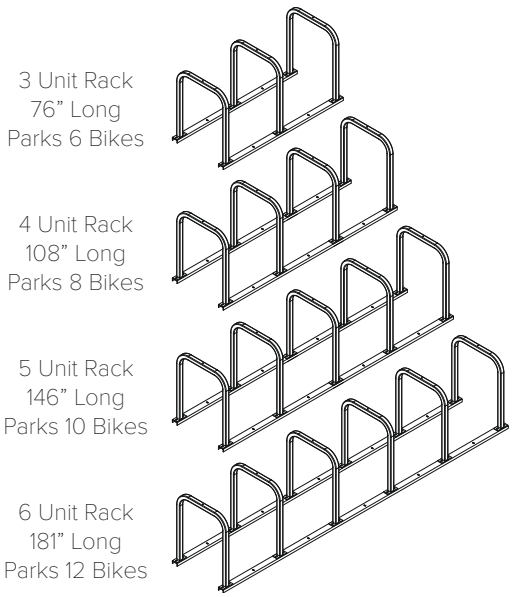

© 2016 Dero

BIKE HITCH

Secure Bike Parking

The Bike Hitch uses thick tube construction and a full radius bend of the ring, making it extremely difficult to cut with a pipe cutter. This popular bike rack has street appeal, a slim silhouette, and accommodates all bike locks.

DERO
A PLAYCORE Company

© 2016 Dero

BIKE HITCH

YOUR LOGO HERE

Customize the Bike Hitch and brand your bike parking

FINISH OPTIONS

Galvanized

Stainless

PVC Dip

MOUNT OPTIONS

Surface

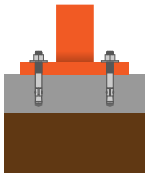

In-Ground

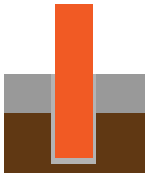

Powder Coat

White	Black	Light Gray RAL 7042	Deep Red RAL 3003	Yellow RAL 1023
CNH Bright Yellow	Orange RAL 2004	Blue RAL 5005	Sky Blue RAL 5015	Hunter Green RAL 6005
Light Green RAL 6018	Green RAL 6016	Sepia Brown RAL 8014	Bronze	Silver 9007
Dark Purple	Flat Black	Wine Red RAL 3005	Beige RAL 1001	Iron Gray 7011

Thermoplastic

Black	Green	Red	Blue	Gray	Brown

www.dero.com | 1-888-337-6729

DERO A PLAYCORE Company

© 2016 Dero

BIKE HITCH

Submittal Sheet

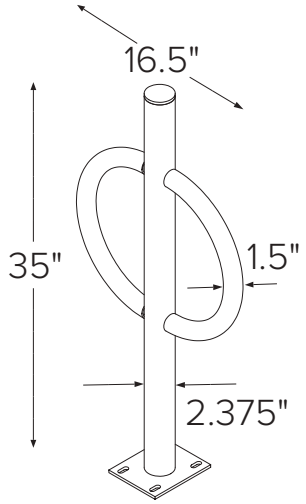

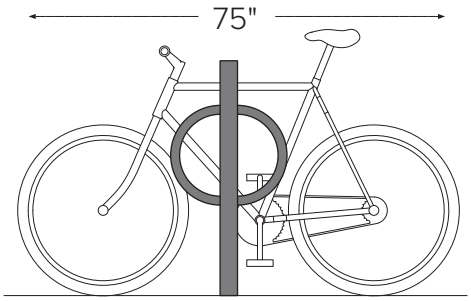

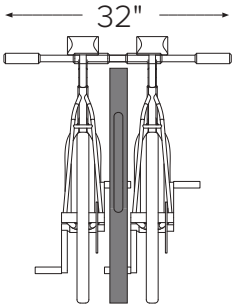

CAPACITY 2 Bikes

MATERIALS

☐ **Standard**
Centerbeam: 2” schedule 40 pipe (2.375” OD)
Ring: 1.5” OD 11 gauge tube

☐ **Lightweight**
***Powder coat or galvanized only**
Centerbeam: 2” schedule 10 pipe (2.375” OD)
Ring: 1.5” OD 11 gauge tube

FINISHES

☐ **Galvanized**
An after fabrication hot dipped galvanized finish is our standard option.

☐ **Powder Coat**
Our powder coat finish assures a high level of adhesion and durability by following these steps:
1. Sandblast
2. Epoxy primer electrostatically applied
3. Final thick TGIC polyester powder coat

☐ **Thermoplastic**
In addition to an increased thickness (8-10mils), the thermoplastic finish covers a galvanized layer and offers superior impact resistance over powder coating.

☐ **PVC Dip** (plastisol)
Other colors available by special order (minimum orders apply)

☐ **Stainless**
Stainless Steel: 304 grade stainless steel material finished in either a high polished shine or a satin finish.

MOUNT OPTIONS

☐ **In-ground**
In ground mount is embedded into concrete base. Specify in ground mount for this option.

☐ **Surface**
Foot Mount has a 5”x6”x.25” foot with four anchors per foot. Specify foot mount for this option.

© 2016 Dero

BIKE HITCH

Setbacks

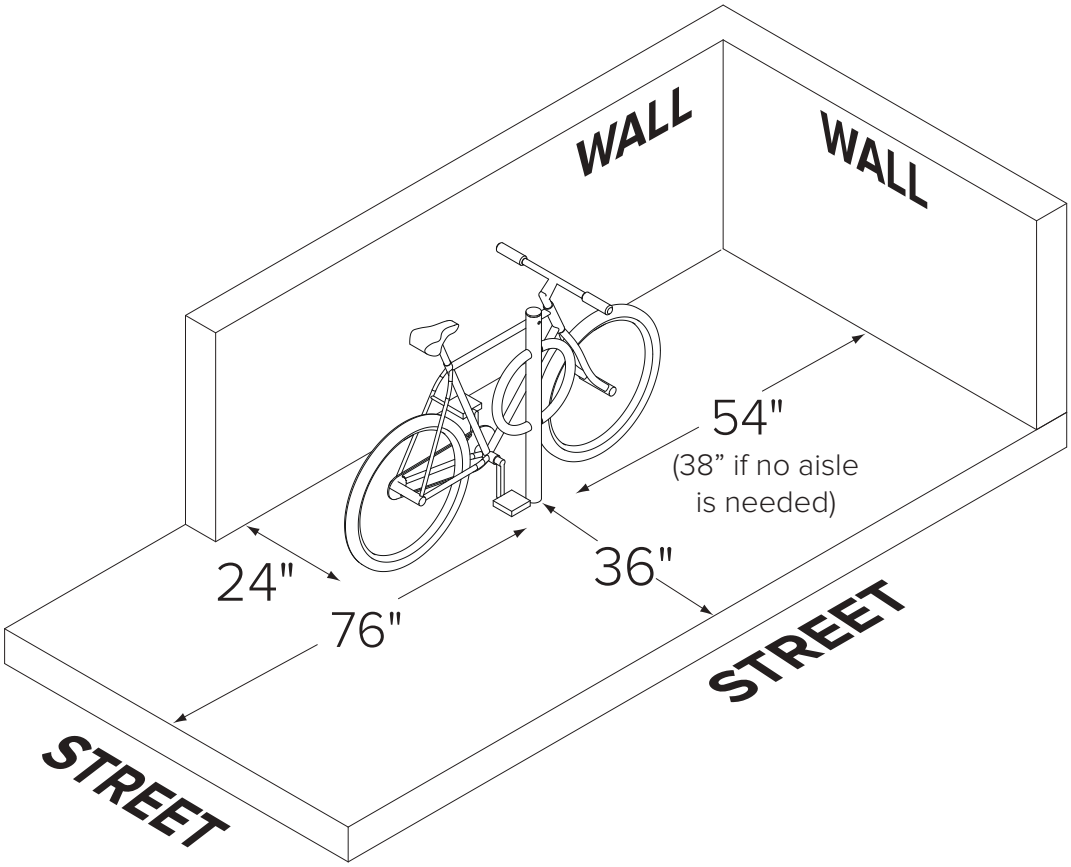

© 2016 Dero

BIKE HITCH

Installation Instructions – Surface Mount

TOOLS NEEDED

Tape Measure
Marker or Pencil
Masonry Drill Bit
Drill (Hammer drill recommended)
Hammer
Wrench 9/16”
Level
Washers (for leveling if necessary)

RECOMMENDED BASE MATERIAL

Solid concrete is the best base material for installation. To ensure the proper anchors are shipped with your rack, ask your Dero Rack representative which anchor is appropriate for your application. Be sure nothing is underneath the base material that could be damaged by drilling.

1

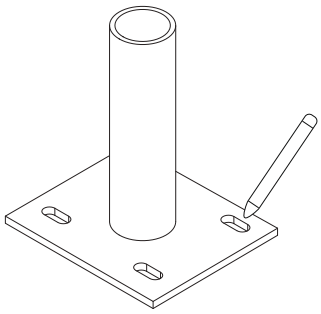

Place the rack in the desired location. Use a marker or pencil to outline the holes of the flange onto the base material.

2

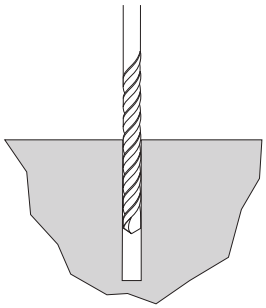

Drill 3/8” diameter holes 3” deep into surface. Make sure the holes are at least 3” away from any cracks in the base material.

3

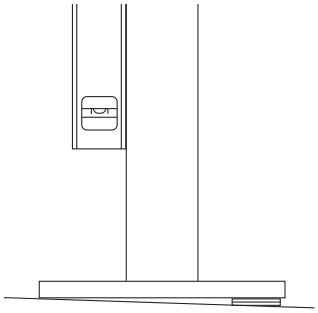

Place rack (and washers to level rack if necessary) over holes.

4

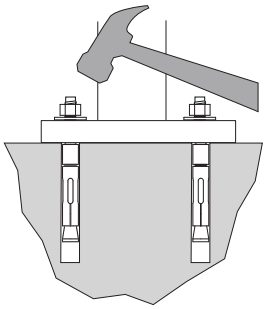

Thread nuts onto anchors, leaving approximately 1/4” of the anchor protruding, and tap into surface. Tighten nuts down to secure rack.

© 2016 Dero

BIKE HITCH

Installation Instructions – In Ground Mount

TOOLS NEEDED

Level
Cement mixing tub
Shovel
Trowel
Hole coring machine with 4” bit
Access to water hose
Materials to build brace (see “Install Tip” at bottom of page)

INSTALLING INTO EXISTING SIDEWALK

Core holes no less than 3” diameter (4” recommended) and 10” deep into sidewalk. Fill holes with Por-Rok or epoxy grout. Place rack into holes, making sure the rack is level. 33”-36” of the rack should remain above the surface. If the rack is less than 33” high, it will not support the bike adequately. Make sure the rack is level and held in place until the grout has set.

INSTALLING INTO A NEW SIDEWALK

1

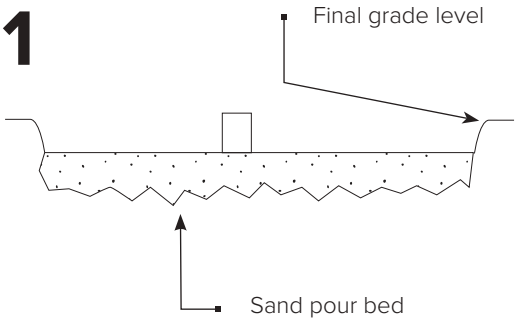

Place corrosion resistant sleeve (min. 3” inside diameter) in sand pour bed in exact location where rack will be installed. Make sure top of sleeve is at same level as desired finished concrete surface. Fill sleeve with sand to keep it in place and prevent it from filling with concrete.

2

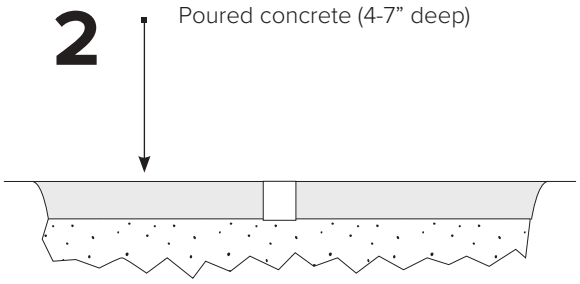

Pour concrete and allow to cure.

3

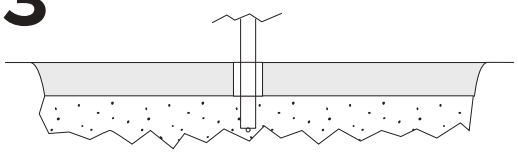

After appropriate cure time, dig out sand from sleeves and insert racks, making sure they are level and at the appropriate height. Pour in Por-Rok or epoxy grout and allow to set.

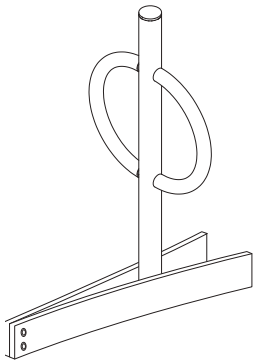

INSTALL TIP

An easy way to brace the rack while the grout sets is to bolt two 1x4” boards together at one end and clamp them onto the rack like a clothes pin.

© 2016 Dero

U-LOCKIT™

No More Wheel Benders

Bicyclists hate old-style “wheel bender” bike racks, the ones where you wedge your wheel between the bars and can’t use a U-lock. We hate them, too! That’s why we made the U-Lockit™ — a small, modular, affordable rack that actually does what bike racks are supposed to do: secure your bike with any lock. Perfect for smaller applications and short-term parking at schools, churches, and small businesses.

Patent 9,592,868 B2

DERO
A PLAYCORE Company

© 2017 Dero

U-LOCKIT™

ADD ON AS NEEDED

Individual U-Lockit™ arms bolt together so you can order just the amount you need, and it's easy to add more later.

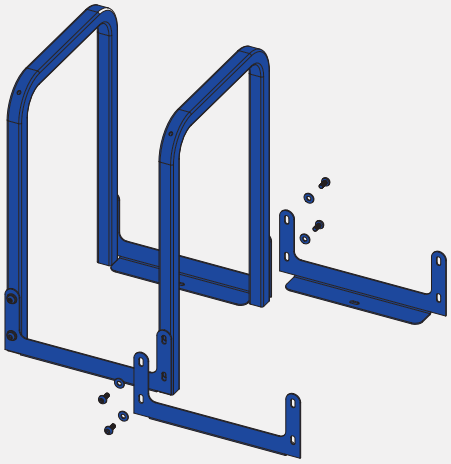

FINISH OPTIONS

Galvanized

Powder Coat

www.dero.com | 1-888-337-6729

DERO A PLAYCORE Company

© 2017 Dero

U-LOCKIT™

Submittal Sheet

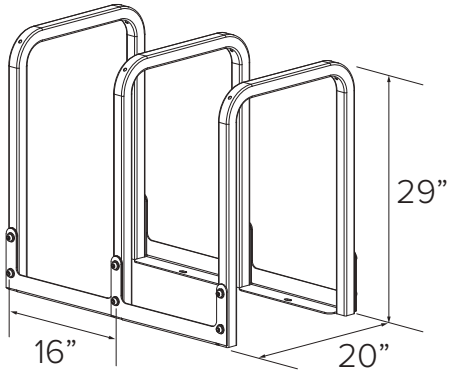

CAPACITY

2 Bikes per hoop
3 hoop minimum for stability

MATERIALS

Hoop: 1.5” 16g sq. tube
Connectors: 11g plate

FINISHES

☐ **Powder Coat**
Our powder coat finish assures a high level of adhesion and durability by following these steps:
1. Sandblast
2. Epoxy primer electrostatically applied
3. Final thick TGIC polyester powder coat

☐ **Galvanized**
An after fabrication hot dipped galvanized finish is our standard option.

MOUNT OPTIONS

☐ **Surface**
All connections and mounting parts have pre-threaded mounting holes (except the feet). No drilling or tapping required.

DERO
A PLAYCORE Company

www.dero.com | 1-888-337-6729

© 2017 Dero

U-LOCKIT™

Setbacks

Double sided use

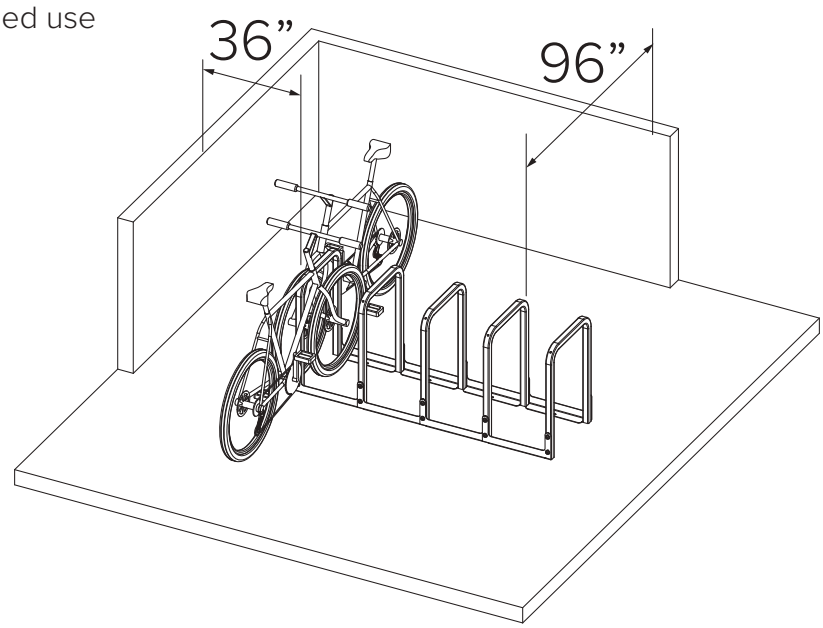

Single sided use

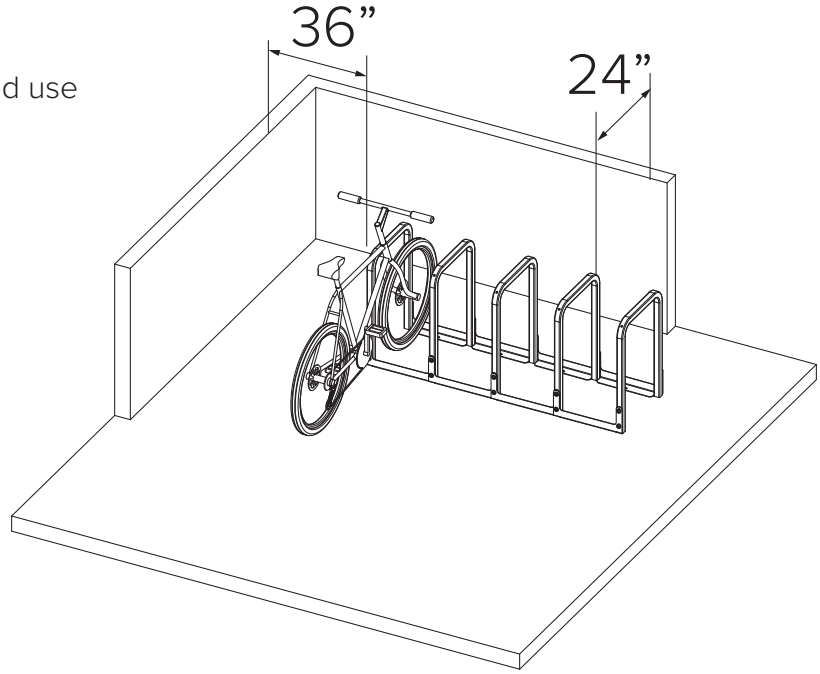

© 2017 Dero

U-LOCKIT™

Installation Instructions

1

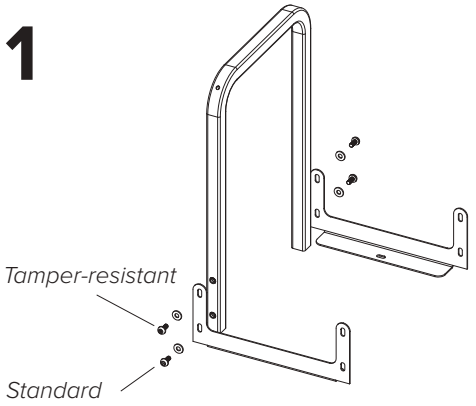

Place the rack in the desired location. Use a marker or pencil to outline the holes of the flange onto the base material.

2

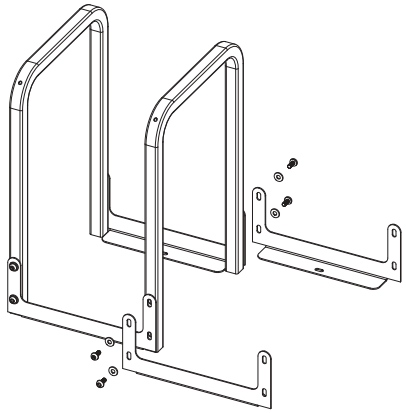

Attach the next hoop and (2) plates with (2) 3/8" x 1" tamper-resistant bolts, (2) 3/8" x 1" bolts, and (4) washers. Continue attaching hoops and plates as needed.

3

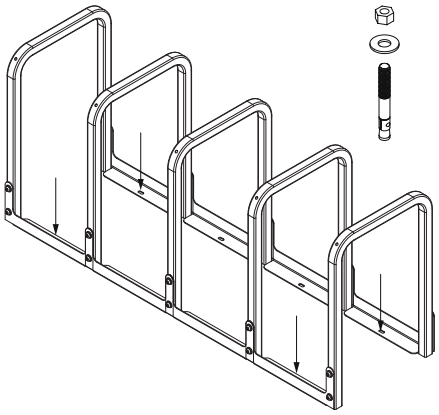

When assembly is completed, position the assembly and anchor to the ground through the slotted holes in the plates on each end of the run of racks. For longer runs you may also need to add anchors to a middle section.

DERO
A PLAYCORE Company

www.dero.com | 1-888-337-6729

© 2017 Dero

CYCLE STALL ELITE

Easy Conversion, Rugged Support

The Cycle Stall bike corral turns a standard on-street, car parking stall into protected, bike parking. The Cycle Stall is the first on-street bike parking kit that includes everything needed for the conversion from car to bike parking. The Cycle Stall frame is built from rugged, impact resistant, two inch steel. It provides a physical barrier from traffic while including racks with optimum frame support and security. The Cycle Stall is designed to work in a standard 22' parking stall. Additional sections may be added to extend your on-street bike parking when needed.

DERO
A PLAYCORE Company

© 2016 Dero

CYCLE STALL ELITE

FINISH OPTIONS

Galvanized

Stainless

Powder Coat

White	Black	Light Gray RAL 7042	Deep Red RAL 3003	Yellow RAL 1023
CNH Bright Yellow	Orange RAL 2004	Blue RAL 5005	Sky Blue RAL 5015	Hunter Green RAL 6005
Light Green RAL 6018	Green RAL 6016	Sepia Brown RAL 8014	Bronze	Silver 9007
Dark Purple	Flat Black	Wine Red RAL 3005	Beige RAL 1001	Iron Gray 7011

Thermoplastic

Black	Green	Red	Blue	Gray	Brown

www.dero.com | 1-888-337-6729

DERO A PLAYCORE Company

© 2016 Dero

CYCLE STALL ELITE
Submittal Sheet

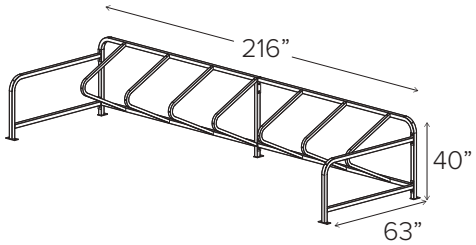

CAPACITY 14 Bikes

MATERIALS Main body 2” x 1/8” square tube
Locking bars 1.5” x 1/8” square tube

FINISHES

☐ **Galvanized**
An after fabrication hot dipped galvanized finish is our standard option.

☐ **Powder Coat**
Our powder coat finish assures a high level of adhesion and durability by following these steps:
1. Sandblast
2. Epoxy primer electrostatically applied
3. Final thick TGIC polyester powder coat

☐ **Thermoplastic**
In addition to an increased thickness (8-10mils), the thermoplastic finish covers a galvanized layer and offers superior impact resistance over powder coating.

DELINEATORS

☐ **White**

☐ **Yellow**

MOUNT OPTIONS

☐ **Surface**
has five 2” wide feet which should be anchored to the ground with supplied anchors

TRAFFIC DELINEATORS

Five 48” tall traffic delineators are included to protect your installation from damage by vehicles.

The delineators are secured to the ground with an epoxy cement and include two bands of reflective tape for greater visibility in low light.

DERO
A PLAYCORE Company

www.dero.com | 1-888-337-6729

© 2016 Dero

CYCLE STALL ELITE

Setbacks

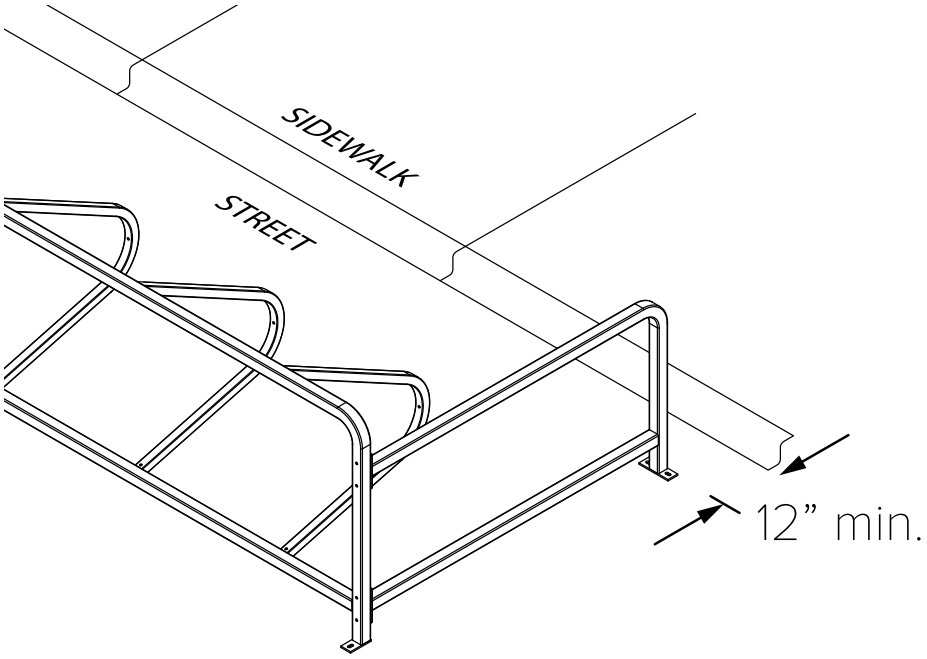

Be sure to check with your local municipal codes and laws for on-street installation regulations.

© 2016 Dero

CYCLE STALL ELITE

Installation Instructions

TOOLS NEEDED

Tape Measure
Marker or Pencil
Masonry Drill Bit 3/8”
Drill (Hammer drill recommended)
Hammer
Wrench 9/16”

RECOMMENDED BASE MATERIAL

A concrete base is the best surface for installation. For installation into asphalt, separate asphalt anchors and instructions will be sent with the rack.

1

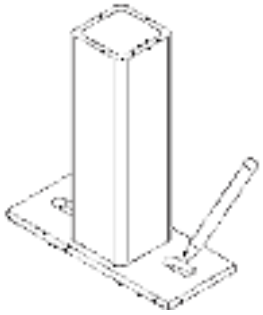

Attach the Cycle Stall segments on street with the supplied 3/8” x 2.75” carriage bolts, and move assembled unit into place.

Place the rack in the desired location. Use a marker or pencil to outline the holes of the flange onto the base material.

2

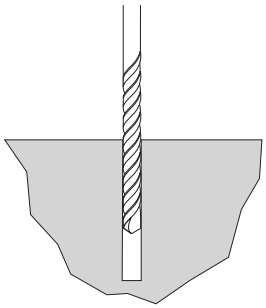

Drill 3/8” diameter holes 3” deep into surface. Make sure the holes are at least 3” away from any cracks in the base material.

3

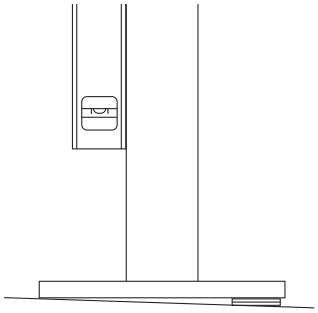

Place rack (and washers to level rack if necessary) over holes.

4

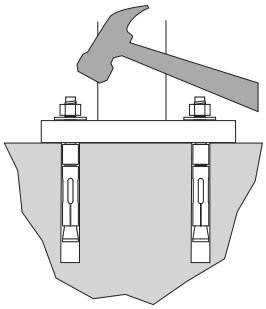

Thread nuts onto anchors, leaving approximately 1/4” of the anchor protruding, and tap into surface. Tighten nuts down to secure rack.

© 2016 Dero

CYCLE STALL ELITE

Custom Options

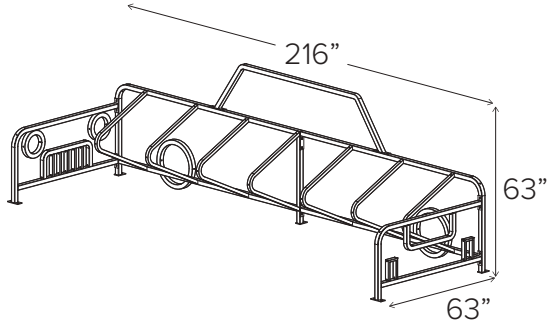

The optional car kit puts an ironic twist to on-street parking. Unlike the real thing, this vehicle does not produce harmful emissions and instead encourages a healthier, greener way of getting around town.

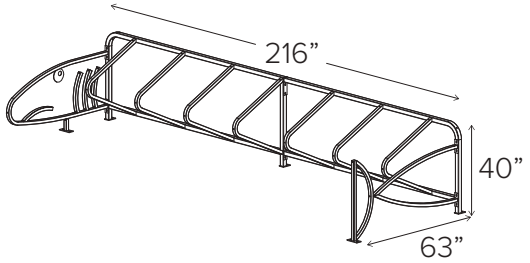

Lure bicyclists into this safe harbor with the specially designed fish kit. This specialized Cycle Stall would complement any waterside streetscape or aquatic themed organization.

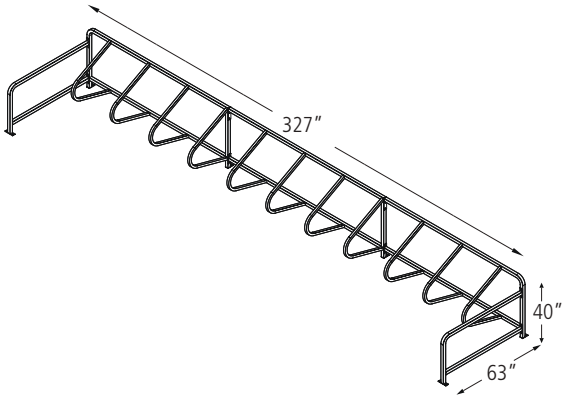

Due to the Cycle Stall’s modular design, additonal extender units may be ordered where a higher bike parking capacity is required. Each extension adds parking for 8 more bikes.

© 2016 Dero

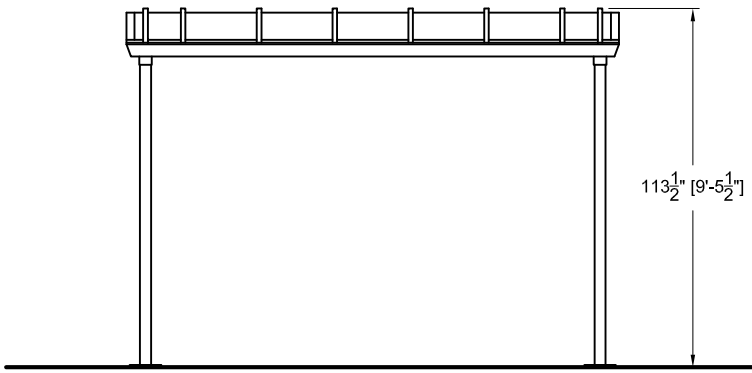

FRONT ELEVATION

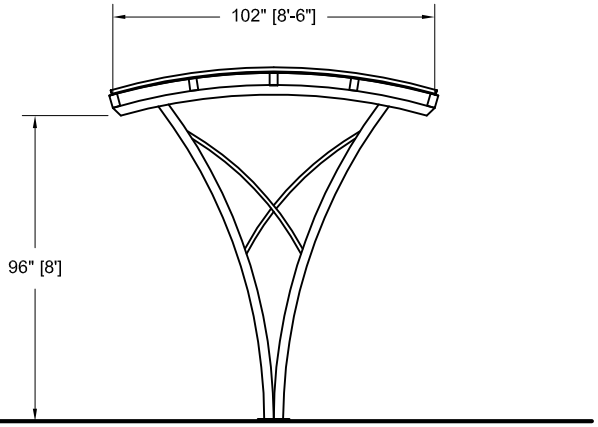

END ELEVATION

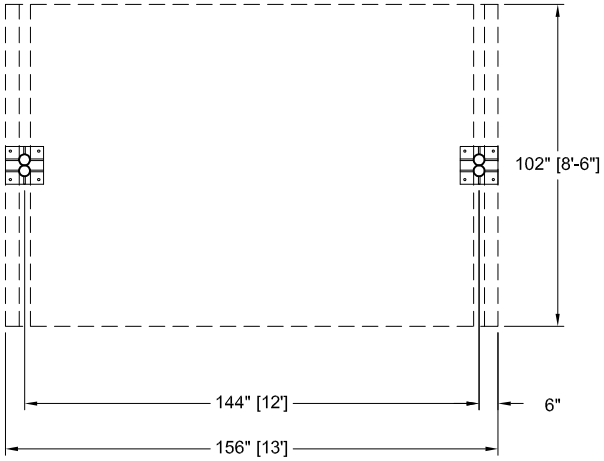

PLAN VIEW

NOTES:
- Framework to be welded and mechanically fastened steel
- All mechanical connections to be made with concealed fasteners
- Rafters and purlins shall be beveled, then capped, welded and ground smooth prior to finishing
- Base anchor plates shall be stainless steel, grade 304, finished to match shelter
- Roof glazing to be 8MM structural polycarbonate - batten system
- See section 10 72 43 for detailed written specifications
- Design is preliminary, conceptual, and subject to change based on final engineering phase and customer approval

- AVAILABLE IN CUSTOM SIZES - PLEASE CONSULT DUO-GARD INDUSTRIES

DUO-GARD FORGE AHEAD
Duo-Gard Industries, Inc.
Tel (734) 207-9700 Fax (734) 207-7995
www.duo-gard.com

THIS DRAWING IS PROPRIETARY AND FOR THE SOLE USE OF OUR CUSTOMER AND MAY NOT BE COPIED OR REPRODUCED WITHOUT PRIOR WRITTEN CONSENT FROM DUO-GARD INDUSTRIES, INC.

LEAD TIME BEGINS UPON RECEIPT OF SIGNED SHOP DRAWINGS

APPROVAL SIGNATURE DATE

X _____ ____/____/____

PROJECT NAME

CUSTOMER SAMPLE

DESCRIPTION

9' X 13' "PARACHUTE" BICYCLE SHELTER

PRJT ENG	PRJT MGR	DRFTR	DRW'G DATE	REV1	REV2	SCALE	PAGE	OF	DRWNG #
		GS	1.1.2017				1	1	0913PAR

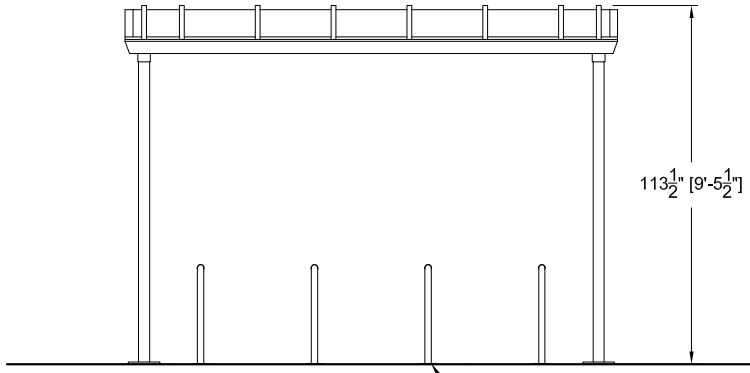

FRONT ELEVATION

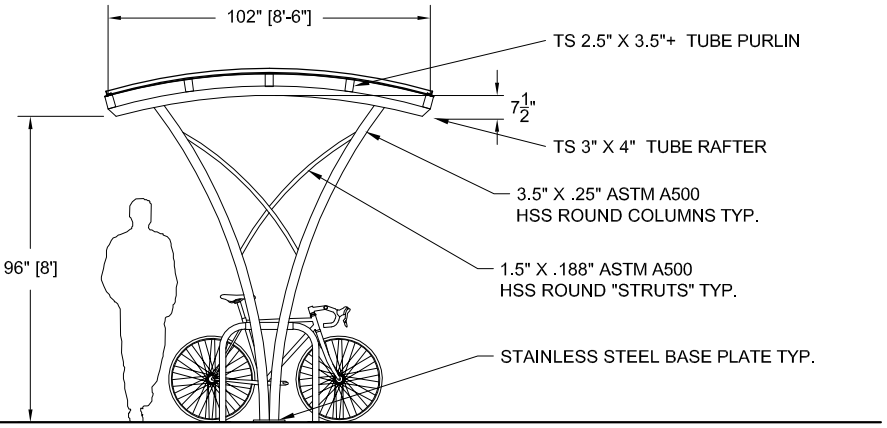

END ELEVATION

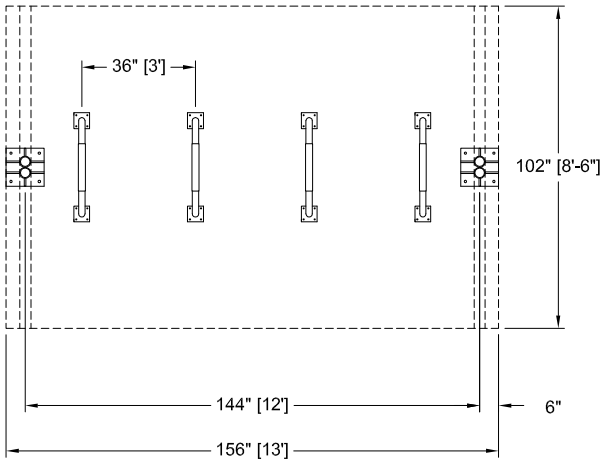

PLAN VIEW
36" RACK SPACING

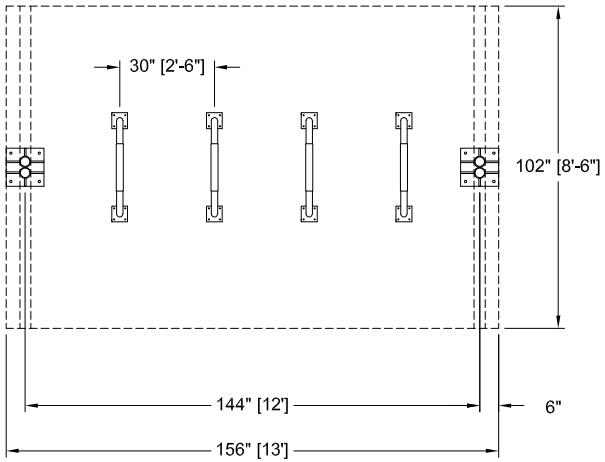

PLAN VIEW
30" RACK SPACING

NOTES:
*FRAMEWORK TO BE WELDED AND MECHANICALLY FASTENED STEEL
*ALL FASTENERS TO BE STAINLESS STEEL
*ROOF GLAZING TO BE: 8MM POLYCARBONATE STRUCTURED SHEET, BATTEN SYSTEM, IN ALUMINUM TRIM. TINT: _____
*STEEL FINISHING:
*MEDIA BLAST PREP
*TNEMEC TNEME ZINC 90-97 PRIMER
*TNEMEC SERIES N69 HI-BUILD EPOXOLINE 2-PART EPOXY MIDCOAT;
*TNEMEC SERIES 73 ENDURA-SHIELD TOPCOAT.
*ALUMINUM TRIM TO HAVE SAME TOP TWO COATS.
*COLOR: _____
*ALL DIMENSIONS TO BE FIELD VERIFIED

*DESIGN IS PRELIMINARY, AND CONCEPTUAL, AND SUBJECT TO CHANGE BASED ON FINAL ENGINEERING PHASE AND CUSTOMER APPROVAL.

BIKE CAPACITY

RACK SPACING	# OF RACKS	# OF BIKES
36"	4	8
30"	4	8

DUO-GARD
FORGE AHEAD.
Duo-Gard Industries, Inc.
Tel (734) 207-9700 Fax (734) 207-7995
www.duo-gard.com

THIS DRAWING IS PROPRIETARY AND FOR THE SOLE USE OF OUR CUSTOMER AND MAY NOT BE COPIED OR REPRODUCED WITHOUT PRIOR WRITTEN CONSENT FROM DUO-GARD INDUSTRIES, INC.
LEAD TIME BEGINS UPON RECEIPT OF SIGNED SHOP DRAWINGS

APPROVAL SIGNATURE DATE

X_____ ____/____/____

PROJECT NAME
CUSTOMER SAMPLE

DESCRIPTION
9' X 13' "PARACHUTE" BICYCLE SHELTER, PLAN AND ELEVATION DETAILS

PRJT ENG	PRJT MGR	DRFTR	DRW'G DATE	REV1	REV2	SCALE	PAGE	OF	DRWNG #
BDI	SM	GS	9.1.2016			3/16" = 1'-0"	1	1	0913PAR

SECTION 10 73 43
BICYCLE SHELTERS

PART 1 GENERAL

1.1 SECTION INCLUDES

A. Bicycle shelter(s) – Parachute Model

1.3 REFERENCES

A. ASTM A 1008/A – Standard Specification for Steel Bars, Carbon and Alloy, Cold-Finished.

B. ASTM B 209 – Standard Specification for Aluminum and Aluminum-alloy Sheet and Plate.

C. ASTM B 221 – Standard Specification for Aluminum and Aluminum-alloy Extruded Bars, Rods, Wire, Profiles and Tubes.

D. ASCE 7-05 – Minimum Design Loads for Buildings and Other Structures.

E. ICC/ANSI A 117.1 – Accessible and Usable Buildings and Facilities.

F. IBC – International Building Code.

G. Americans with Disabilities Act of 1990 (ADA). As amended by Public Law 101-336 (2009)

H. AISC Publications:
   1. Code of Standard Practice for Steel Buildings and Bridges.
   2. Specification for the Design, Fabrication, and Erection of Structural Steel for Buildings, including Commentary.
   3. Structural Welding Code – Steel.

1.4 DESIGN REQUIREMENTS

A. Basic Wind Speed: 90 mph. Upgrades available to meet all hurricane zone requirements.

B. Exposure Category: B: Upgrades available to meet all exposure categories.

C. Basic Snow Load: 20 psf. Upgrades available to meet all snow load requirements.

D. Seismic Design – per local codes. Upgrades available to meet any zone requirement.

E. Column to concrete footing / concrete pad connection to be in compliance with OSHA Steel Erection Standard CFR – which requires a minimum of four (4) anchor bolts per column.

F. No onsite welding shall be required or permitted.

1.5 SUBMITTALS

A. Product Data: Submit manufacturer's product data, including materials, components, finish and all accessories and equipment furnished.

B. Shop Drawings: Submit manufacturer's shop drawings, including plans, elevations, sections and details, dimensions, anchorage, fasteners and locations, flashing and seal details if applicable,

finish, and options.

C. Erection Drawings: Submit manufacturer's instructions and drawings, and develop erection procedures to enable field installation and repair.

D. Manufacturer's Project References: Submit list of completed projects including project name and location and type of shelters manufactured.

E. Warranty: Submit manufacturer's standard warranty.

1.6 QUALITY ASSURANCE

A. Manufacturer's Qualifications:
   1. Continuously engaged in Steel Shelter manufacturing with a minimum of 10 years successful experience.
   2. Able to demonstrate successful performance on comparable projects.
   3. Responsible for all components, including structural design.
   4. All welding performed by AWS certified welders and inspected by AWS certified inspectors.

B. Installer's Qualifications:
   1. Authorized by manufacturer to install Shelters.
   2. Trained by manufacturer' standard training methods and policies.

1.7 DELIVERY, STORAGE, AND HANDLING

A. Delivery: Deliver materials to site in manufacturer's original, unopened containers and packaging, with labels clearly identifying product name, manufacturer, and location of installation with detailed written instructions for installation.

B. Storage: Store materials in a clean, dry area indoors in accordance with manufacturer's instructions.

C. Inspect for concealed damage within 48 hours of delivery and compare manufacturer's bill of lading / packing list and report any missing items to the manufacturer within this time frame.

1.8 WARRANTY

A. Warranty Period: One year starting on date of substantial completion.

PART 2 PRODUCTS

2.1 MANUFACTURER

A. "Parachute" model, 9' x 13', by Duo-Gard Industries Inc., 40442 Koppernick Road, Canton, Michigan 48187. Phone (734) 207-9700. Fax (734) 207-7995. Web Site www.duo-gard.com. E-Mail info@duo-gard.com.

B. Substitutions must be approved ten (10) days prior to the bid date. Alternate providers must provide complete product drawings as well as proof of equivalency of the pretreatment and Tnemec finish system. Powder coating will not be an acceptable alternative. Please forward complete information, including testing information to meet ASTM requirements, for the alternate requested finishing procedures.

2.3 Fabricated Steel Shelters

A. Shelters – A pre-engineered and prefabricated framed shelter(s), columns, rafters, purlin structure with roof panels, trim, flashing, fasteners and accessories needed for complete installation.

B. The shelter glazing trim and associated components shall be fabricated using 6063-T5 extruded aluminum members Fed. Spec. QQ-A-200/9C(1). 6061-T6 and 6005-T6 alloy/temper shall be used where required. Finished to match.

C. Fasteners:
   1. Roof framing, accessories, amenities, wall / roof trim: stainless steel or aluminum.
   2. Structural/frame connections: grade 304 or 316 stainless steel.
   3. Anchoring: grade 304 or 316 stainless steel wedge anchor bolts or adhesive anchors.
   4. Fasteners ¼" dia. and smaller: finished to match at factory (as req'd).
   5. Fasteners 5/16" dia. and larger: to remain unfinished in completed product, or painted in field.
   6. All connections shall be concealed. No exposed fasteners shall be allowed other than anchor bolts.

D. Structural framing shall be Hollow Structural Sections (HSS) meeting ASTM A500 grade B.

E. Steel Roof Rafter and Purlins shall be beveled at a 45 degree angle. The openings shall be capped with steel, welded and ground smooth prior to the finishing process.

F. Ground anchor plates shall be stainless steel, grade 304, which are welded to the columns in the factory. The anchor plates shall be finished per section 2.5 (A).

G. Roof sheathing/glazing shall be shall be: translucent polycarbonate structured sheet or standing seam metal (choose one).
   1. Translucent polycarbonate structured sheet: 8mm multi-wall polycarbonate sheet. Edges and joints to be trimmed with extruded aluminum glazing system, finished to match. Polycarbonate tint to be: clear, bronze, opal, other: _____ (choose).
   2. 24 gauge standing seam galvalume steel panels – color to be selected from roof color guide. Aluminum Panels, standard thickness is .032, are available in limited colors.

H. Joint Sealant:
   1. Factory-Applied Sealant: Gunnable, non-hardening, elastomeric sealant. ASTM C 920, Type S, Class 12, Grade NS. Fed Spec TT-S-1657, Type 1.n.
   2. Field-Applied Sealant: As approved by the shelter manufacturer.

I. Field Fasteners:
   1. Comply with shelter manufacturer's instructions for fastener types, quantities, and usage. Substitutions are not permitted.

J. Shelter fabrication and all components must meet Buy America Requirements.

2.4 Accessories

A. LED Solar Lighting, or grid tied LED lighting, are available as a standard offering. Other types of light fixtures are available. Please contact the manufacturer for additional information.

2.5 COLOR AND FINISH

A. Steel framework finish shall be:

1. Duo-Gard long-wear paint process:
    a. Media Blast Prep to SSPC-SP10/NACE #2 Near White Blast Cleaned Steel.
    b. Tnemec Tneme-Zinc 90-97 primer; to meet ASTM D 1014 (Type II) Exterior Exposure and ASTA D 4541 (type II) Adhesion.
    c. Tnemec F.C. Typoxy Series 27 intermediate coat. To meet ASTM D 4060, ASTM D 3359, ASTA D 4585 and ASTM D 1653.
    d. Tnemec series 1075 Endura-Shield II topcoat; To meet requirements of ASTM D4060, ASTM D 3359, ASTM D 4141, ASTM D 522 and ASTM D4585.
    e. Topcoat Color:_____.

B. For approved equal requests to Tnemec finish provide the testing data for the requested alternate finish method for the following tests and test results. The requested finish system shall meet or exceed the requirements of the ASTM numbers listed above in 2.5 (A1, items b-d).
    a. ASTM B 117 – Salt spray (Fog) Testing (1,000 hours exposure)
    b. ASTM D 610 – Evaluating Degree of Rusting
    c. ASTM D 1654 – Evaluating Coatings Subjected to Corrosive Environments

PART 3 EXECUTION

3.1 EXAMINATION

A, When unloading you will typically need a fork lift, with fork extenders. When uncrating handle all materials carefully to avoid scratching the finish. Note any visible damage on bill of lading. Concealed damage shall be reported to the manufacturer within 48 hours of delivery.

C. Examine areas to install shelters. Notify Architect of conditions that would adversely affect installation. Do not proceed with installation until unsatisfactory conditions are corrected.

3.2 PREPARATION

A. Ensure location to receive shelter is clean, flat, level, plumb, square, accurately aligned, and correctly located.

3.3 INSTALLATION

A. The manufacturer shall provide installation instructions complete with diagrams. Installation shall be performed by the manufacturer or his representative (option). The manufacturer shall guarantee the installation for a period of one (1) year, when performed by the manufacturer, from the date of acceptance.

3.4 CLEANING

A. Clean shelters in accordance with manufacturer's instructions.

B. Clean inside and outside of shelters immediately after installation.

C. Do not use harsh cleaning materials or methods that would damage the metal finish or glazing.

3.5 PROTECTION

A. Protect installed shelters from damage during construction.

END OF SECTION

FIXIT

Today's Service Station

The Fixit includes all the tools necessary to perform basic bike repairs and maintenance, from changing a flat to adjusting brakes and derailleurs. The tools and air pump are securely attached to the stand with stainless steel cables and tamper-proof fasteners. Hanging the bike from the hanger arms allows the pedals and wheels to spin freely while making adjustments.

Patents D680,914 S1 and US 9,498,880 B2

DERO
A PLAYCORE Company

© 2016 Dero

FIXIT

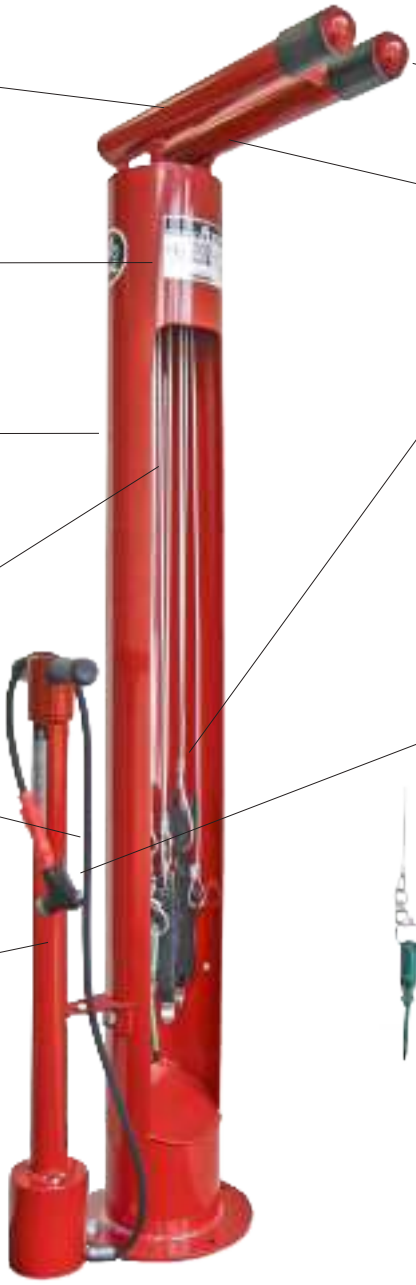

Hanger arms accommodate most types of bikes

Hanger arms can be mounted at 12, 3, 6, or 9 o'clock

Hanger is ADA compliant

QR code takes smart phone users to comprehensive bike repair web site

Large surface area for sponsorship, branding, or way-finding signage

Includes most commonly used tools for simple bike maintenance

Screwdrivers and Allen Wrenches are on swivel connectors for easier use

Tools are secured with braided stainless steel aircraft cables

Pump head accommodates Presta and Schrader valve stem types

Pump hose is reinforced for maximum protection

Pump holster can be mounted on either side or back of Fixit

Hanger and pump (shipped as 2nd package) pack inside main body for easy, inexpensive shipping

Tools included:
Philips and flat head screwdrivers
2.5, 3, 4, 5, 6, 8mm Allen wrenches
Headset wrench
Pedal wrench
8, 9, 10, 11mm box wrenches
Tire levers (2)

FINISH OPTIONS

Galvanized

Stainless

Powder Coat

White	Black	Light Gray RAL 7042	Deep Red RAL 3003	Yellow RAL 1023
CNH Bright Yellow	Orange RAL 2004	Beige RAL 1001	Iron Gray 7011	Hunter Green RAL 6005
Light Green RAL 6018	Green RAL 6016	Sepia Brown RAL 8014	Bronze	Silver 9007
Dark Purple	Flat Black	Wine Red RAL 3005		

Thermoplastic

Black	Green	Red	Gray	Brown

www.dero.com | 1-888-337-6729

DERO
A PLAYCORE Company

© 2016 Dero

FIXIT

Submittal Sheet

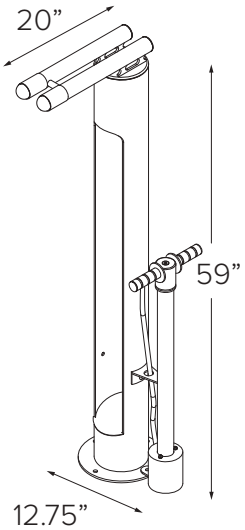

Fixit with Air Kit 2

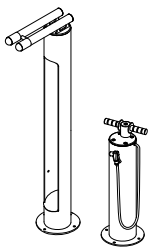

Fixit with Air Kit 3

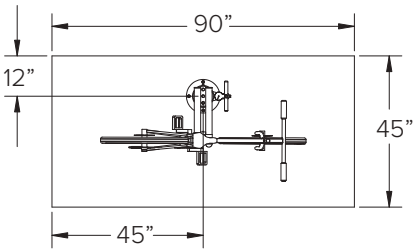

Minimum Footprint

CAPACITY 1 Bike

MATERIALS

Main body: 6”x .154” tube
Bike Hanger: 1.5” sch. 40 pipe, ¼” plate
Foot: 10” dia. x .25” plate
Tool tethers: 5/32” stainless steel cable
Manual air pump
Hand tools:
- Philips and flat head screwdrivers
- 2.5, 3, 4, 5, 6, 8mm Allen wrenches
- Headset wrench
- Pedal wrench
- 8, 9, 10, 11mm box wrenches
- Tire levers (2)

FINISHES

☐ **Galvanized**
An after fabrication hot dipped galvanized finish is our standard option.

☐ **Powder Coat**
Our powder coat finish assures a high level of adhesion and durability by following these steps:
1. Sandblast
2. Epoxy primer electrostatically applied
3. Final thick TGIC polyester powder coat

☐ **Thermoplastic**
In addition to an increased thickness (8-10mils), the thermoplastic finish covers a galvanized layer and offers superior impact resistance over powder coating.

☐ **Stainless**
Stainless Steel: 304 grade stainless steel material finished in either a high polished shine or a satin finish.

MOUNT OPTIONS

☐ **Surface**
Has 10” diameter x.25” foot with four anchors per foot.

© 2016 Dero

FIXIT

Setbacks

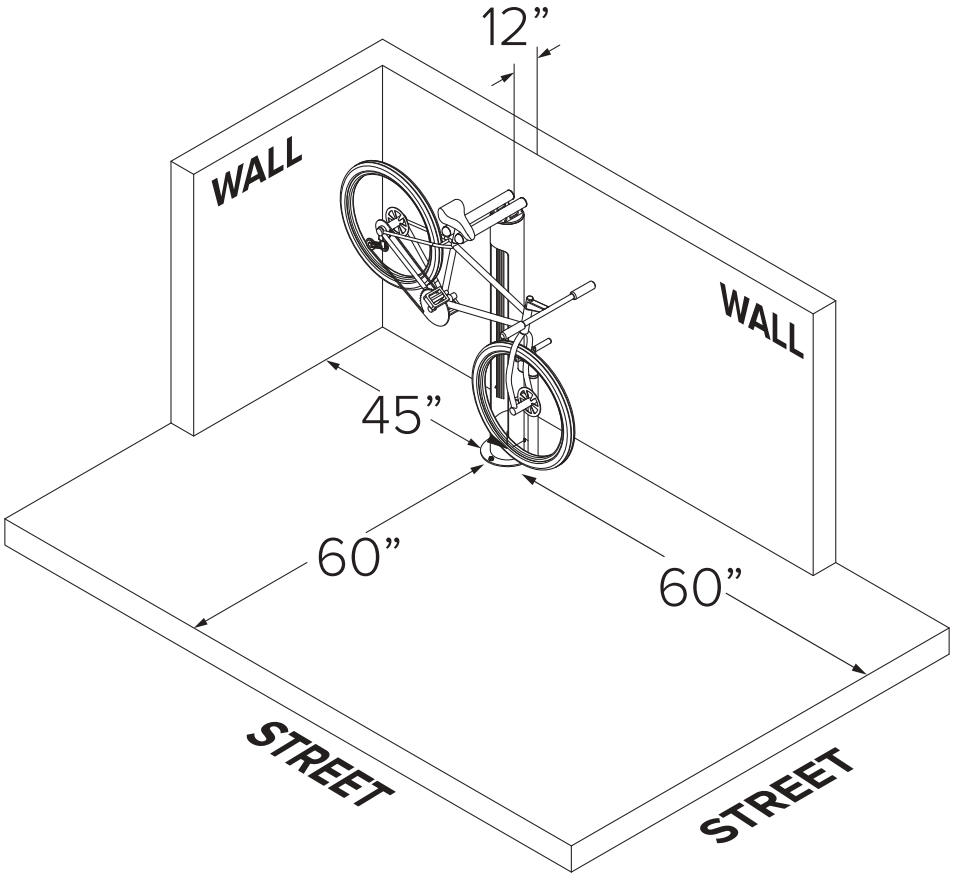

An optional wheel catch is available to hold bikes with no kick stands

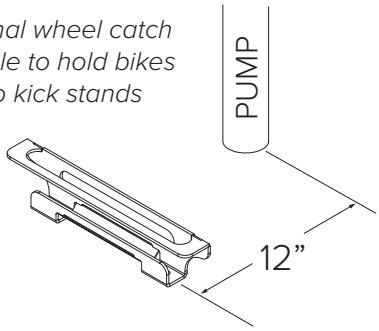

© 2016 Dero

FIXIT

Installation Instructions

TOOLS NEEDED

Hammer drill
3/8” masonry bit
Hammer
Socket Wrench
9/16” socket
Tamper-proof socket (included)*
Socket extension, 6” min.

RECOMMENDED BASE MATERIAL

Solid concrete is the best base material for installation. To ensure the proper anchors are shipped with your rack, ask your Dero Rack representative which anchor is appropriate for your application. Be sure nothing is underneath the base material that could be damaged by drilling.

Be sure to save your tamper-resistant tools for any future maintenance. They are costly to replace.

1

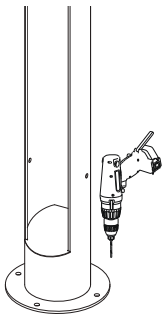

Reference the Fixit setback recommendations and place the upright in the desired location. Use the base as a template and drill (4) 3/8” x 3” holes in the concrete with a hammer drill and masonry bit. Clean up all concrete dust from drilling.

2

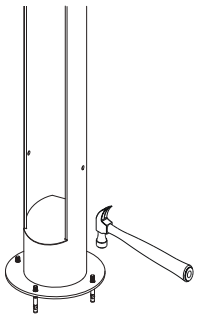

Hammer in the (4) wedge anchors. Leave at least 3/4” of an inch of exposed threads above the Fixit base.

3

Ⓣ = Tamper-proof Nuts
Ⓢ = Standard Nuts

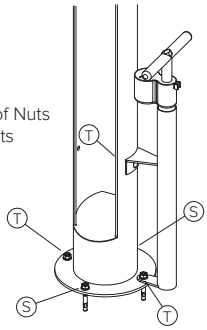

Decide which position the pump will be installed in and place the bottom pump flange over the corresponding wedge anchor. Attach the top pump flange to the Fixit upright with a carriage bolt, washer, and tamper-proof nut. Tighten all wedge anchors with washers and nuts.
Reserve one of the tamper-proof nuts to secure the tools.

4

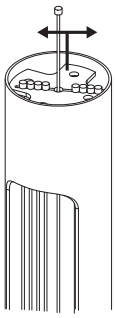

Insert the tool cables into the cable slot on the Fixit upright.

© 2016 Dero

FIXIT

Installation Instructions

5

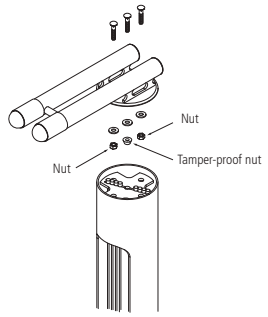

Place the bike hanger in the desired position on top of the Fixit upright and attach with carriage bolts, washers and nuts. **Apply the tamper-proof nut to center bolt to secure tools.**

After installation is complete, please scan the QR code on the Fixit with a smartphone. This will allow us to add this Fixit station to our map available here:

http://www.dero.com/fixitmap/fixitmap.html

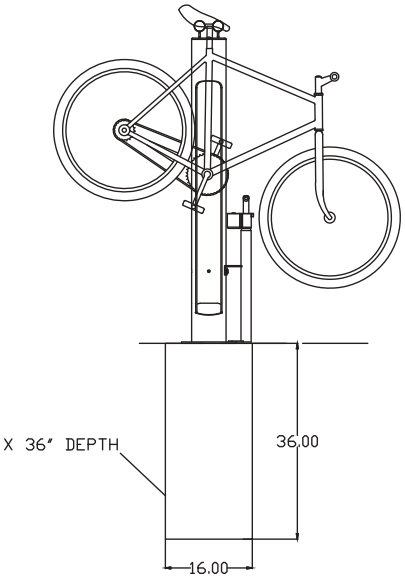

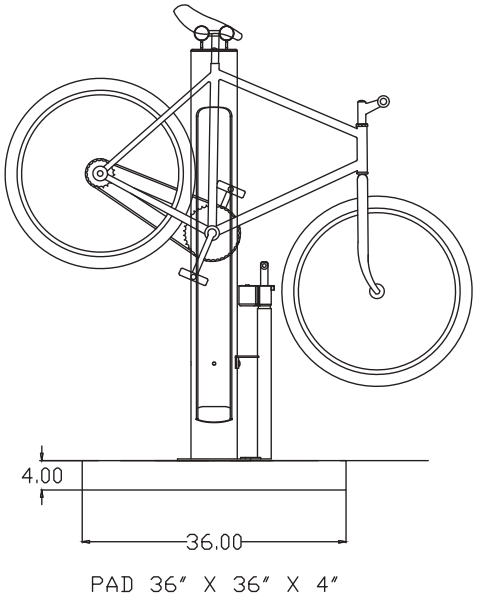

Pad recommendations for pouring along trail

© 2016 Dero

FIXIT

Maintenance and Replacement

NOTE:

All threads for all parts of the pump are right-hand threads. They tighten clockwise, and loosen counter-clockwise ("righty tighty, lefty loosey"). However, when you are looking top-town at a bolt that threads from underneath, if you move it counter-clockwise from your point of view, you are actually tightening, not loosening, the nut! This has led to some unnecessary breakage of pump parts. Be sure you are looking at the nut with the proper orientation before tightening or loosening.

REMOVING THE AIR KIT FROM THE FIXIT

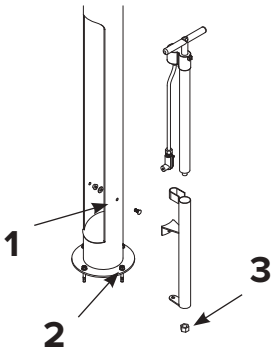

1. Remove nut and bolt on side of Fixit.

2. Remove tamperproof nut on bottom of Fixit, using the Tamperproof Penta Tool supplied for this purpose.

3. Once Airpump is removed, but still in sleeve, remove the 1 3/16" nut on the bottom of the sleeve (turning counter-clockwise). You can now slide the pump out.

CHANGING THE PUMPHEAD

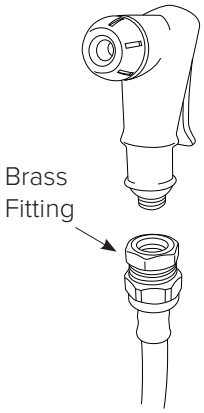

Remove the shrinkwrap. Unscrew the pumphead from the brass fitting (turning counter-clockwise). You will need to keep the brass fitting for the new pumphead. Replace the pumphead. If you want to put on shrinkwrap, then put the shrinkwrap sleeve over the hose before replacing pumphead. Once pumphead is on, pull shrinkwrap sleeve over the brass fitting and use a heatgun to shrink it.

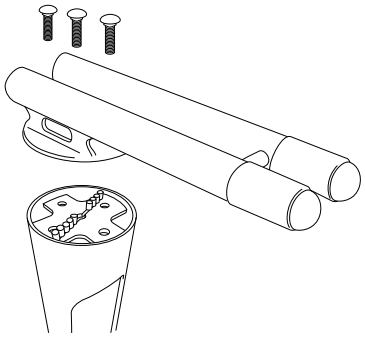

REPLACING TOOLS

There are three bolts at the top of the Fixit. Underneath are two 3/8" nuts, and one penta tamper-proof nut (center bolt). These are all best removed with a socket wrench, using the extension tool to enable you to reach the nuts. Once the nuts are removed, take off the cap to replace tools.

© 2016 Dero

DERO PARKLET

Modular Urban Oasis

The Dero Parklet is an innovative way to build public gathering spaces right in the heart of the urban streetscape. Local businesses with limited sidewalk space now have the unique ability to extend their atmosphere and aesthetic to the outdoors. The Dero Parklet's modular design allows each space to be built to suit any vision. With a galvanized steel frame and recycled paper-based fiber composite decking, this little urban oasis has the durability to last through all seasons.

DERO
A PLAYCORE Company

© 2017 Dero

DERO PARKLET

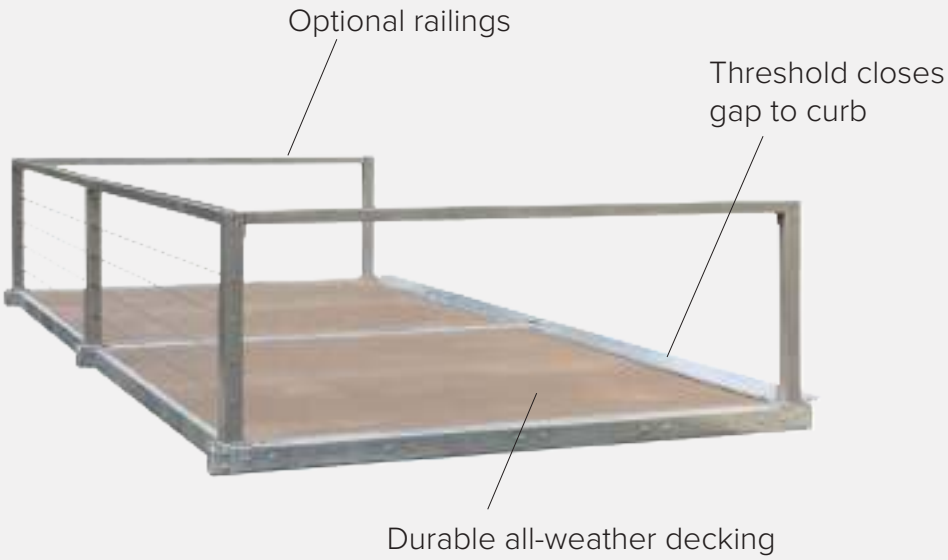

FINISH OPTIONS

Galvanized (Main Frame)

Powder Coat (Railing)

White	Black	Light Gray RAL 7042	Deep Red RAL 3003	Yellow RAL 1023
CNH Bright Yellow	Orange RAL 2004	Blue RAL 5005	Sky Blue RAL 5015	Hunter Green RAL 6005
Light Green RAL 6018	Green RAL 6016	Sepia Brown RAL 8014	Bronze	Silver 9007
Dark Purple	Flat Black	Wine Red RAL 3005	Beige RAL 1001	Iron Gray 7011

www.dero.com | 1-888-337-6729

DERO A PLAYCORE Company

© 2017 Dero

PARKLET

Submittal Sheet

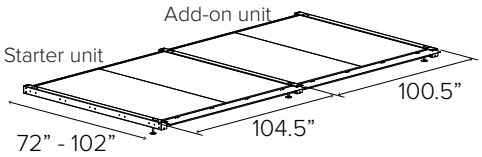

MATERIALS

Main Frame: 4”x 11g square tube
Joist: 2”x 3/16” square tube
Deck Panel: 4’ x 8’ x ½” recycled paper-based fiber composite
Railing Upright: 3” x 11g square tube
Railing: 11g plate
Cable: 3/16” stainless, 316 grade

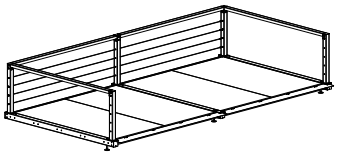

Starter unit, add-on unit, railings, and cables

FINISHES

☐ **Galvanized (Main Frame)**
An after fabrication hot dipped galvanized finish is our standard option.

☐ **Powder Coat (Railings)**
Our powder coat finish assures a high level of adhesion and durability by following these steps:
1. Sandblast
2. Epoxy primer electrostatically applied
3. Final thick TGIC polyester powder coat

MOUNT OPTIONS

☐ **Surface**
The Dero Parklet rests on the installation surface. No drilling is required. It is the responsibility of the installer to ensure that all base materials onto which the Dero Parklet will be installed can support the unit and will not be damaged by any required installation procedures.

LOAD DATA

The Parklet can suport 60 psf, or 3,800 lbs/section.

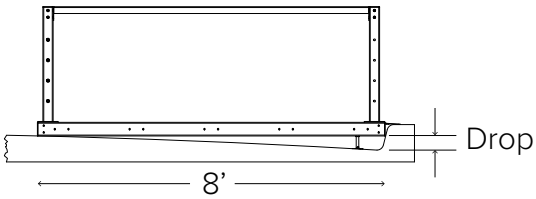

Street Drop
To ensure proper leveling feet are shipped with the Dero Parklet, please determine the amount of drop that occurs over the 8’ where the parklet will be located.

© 2017 Dero

PARKLET

Installation Instructions - Deck (1 of 2)

TOOLS NEEDED

Tape measure
Level
9/16” Socket wrench and box wrench
7/16” Socket wrench
7/16” Allen wrench

1

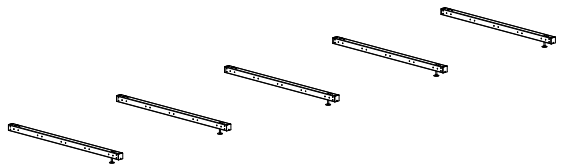

Place the 4” square pieces about 100.5” on-center. Use as many pieces as necessary for the length of deck being built. Placement should be close to the final desired location. The whole deck may be nudged using wood 2x4’s as levers. For example, it may be easier to leave the deck 6” from a curb to aid assembly. For installation on a sloped surface, use (1) leveling foot on each piece.

2

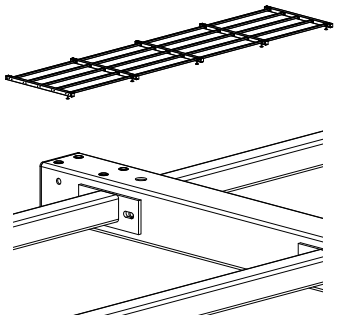

Install (5) Joists per section with 3/8” x 5.5” bolts, washers, and nuts. The flush side of the Joist should be upwards.

3

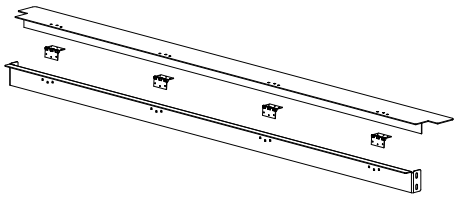

Assemble the Gap Cover, Deck End, and hinges with ¼” x ¾” carriage bolts, lock washers, and nuts.

4

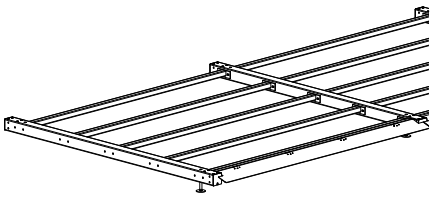

Place the Gap Cover assemblies on the side of the deck that will be adjacent to the curb and attach with 3.8” x 5” bolts, washers, and nuts. Keep hardware finger-tight.

© 2017 Dero

Installation Instructions – Deck (2 of 2)

5

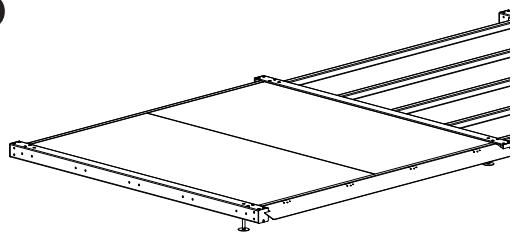

Place (2) Deck Panels per section. Deck Panels should go underneath the lip of the Deck Ends. When all Deck Panels are placed, the Deck Ends should be pressed down and their hardware fully tightened.

6

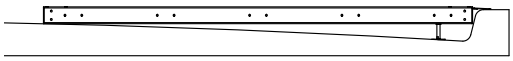

Nudge deck assembly as close to the curb as possible using wood 2x4's as levers. Lower the Gap Cover to sit on top of the curb.

© 2017 Dero

PARKLET

Installation Instructions - Railing

1

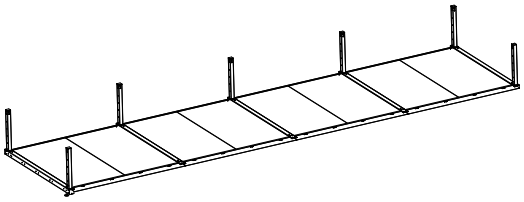

Place Railing Uprights on (4) outermost deck corners and along deck side adjacent to street. Attach with 3/8” x 1” bolts and lock washers. Keep hardware finger-tight.

2

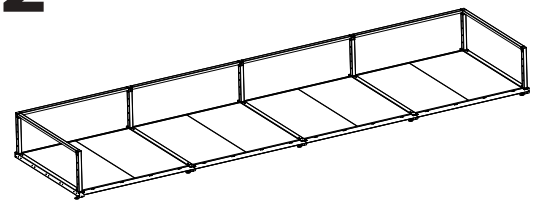

Attach Railing between Uprights with 3/8” x 1” bolts and lock washers. Shorter Railings are placed on the ends and longer Railings are placed adjacent to the street.

Fully tighten all hardware.

© 2017 Dero

PARKLET

Installation Instructions - Cables

1

Refer to cable instructions for details on attaching the cable to the end fittings.

2

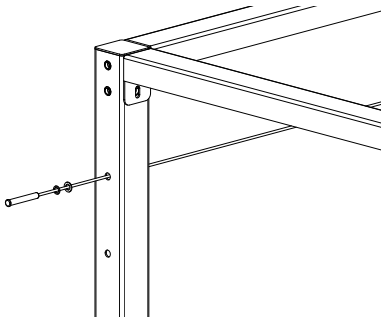

Run the first cable with end fitting, plastic washer, and metal washer through one set of holes in the Railing Uprights.

3

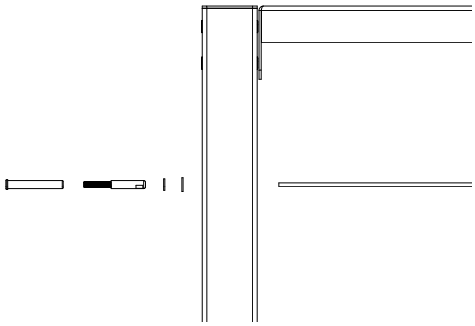

Pull the cable taught and confirm the first end fitting is completely seated in the Railing Upright. Mark the cable 1.5” from the inside surface of the last Railing Upright and trim with an angle grinder fitted with a cut-off wheel. Use the side of the cutoff wheel to de-burr the cable end.

4

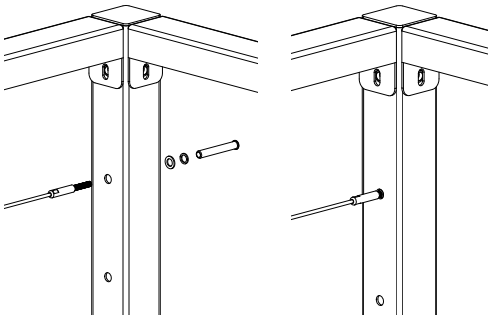

Attach male end fitting to cable and attach to female fitting with plastic washer and metal washer. Tighten with Allan wrench and repeat with other cables. After tightening last cable, return to previous cable and check tightness.

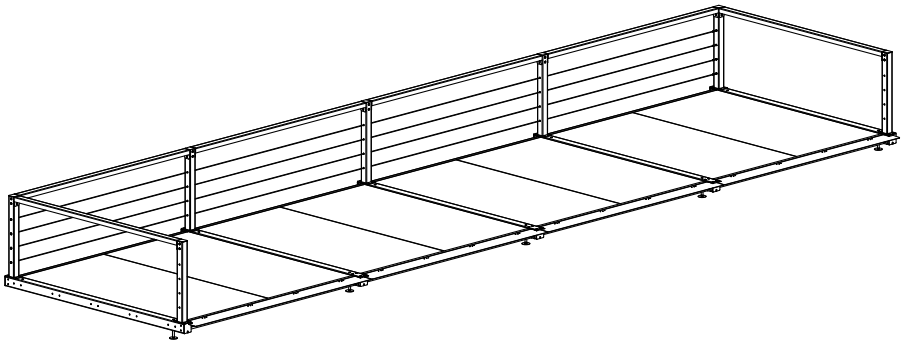

© 2017 Dero

ANCHORING UNDER THE PAVEMENT OR GROUND LEVEL

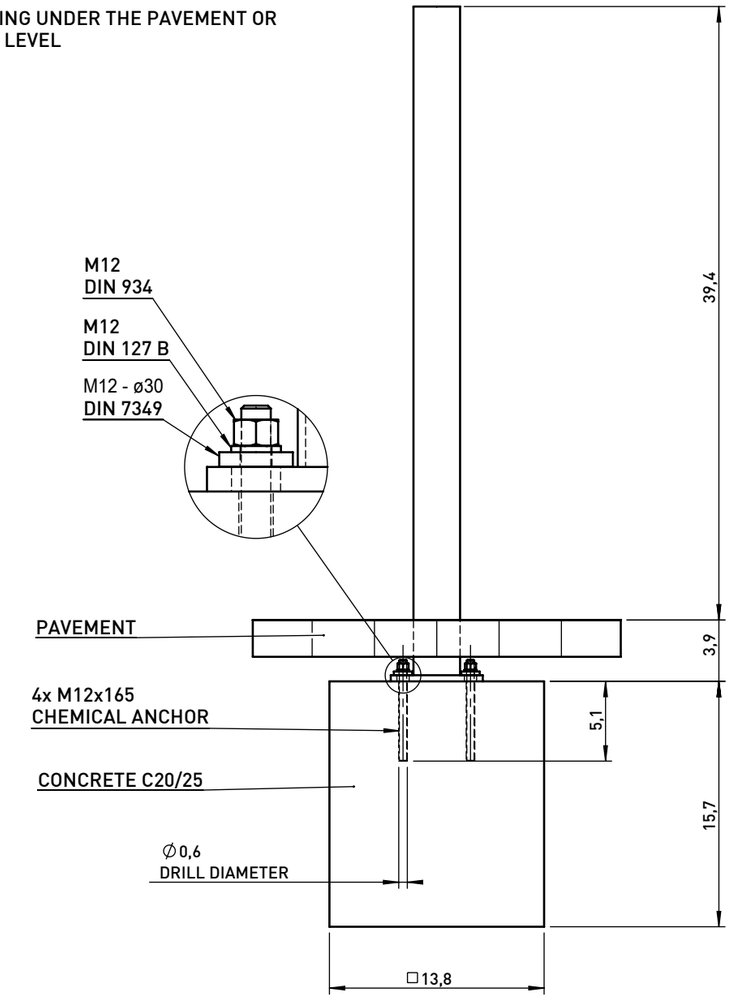

ANCHORING ON THE PAVEMENT

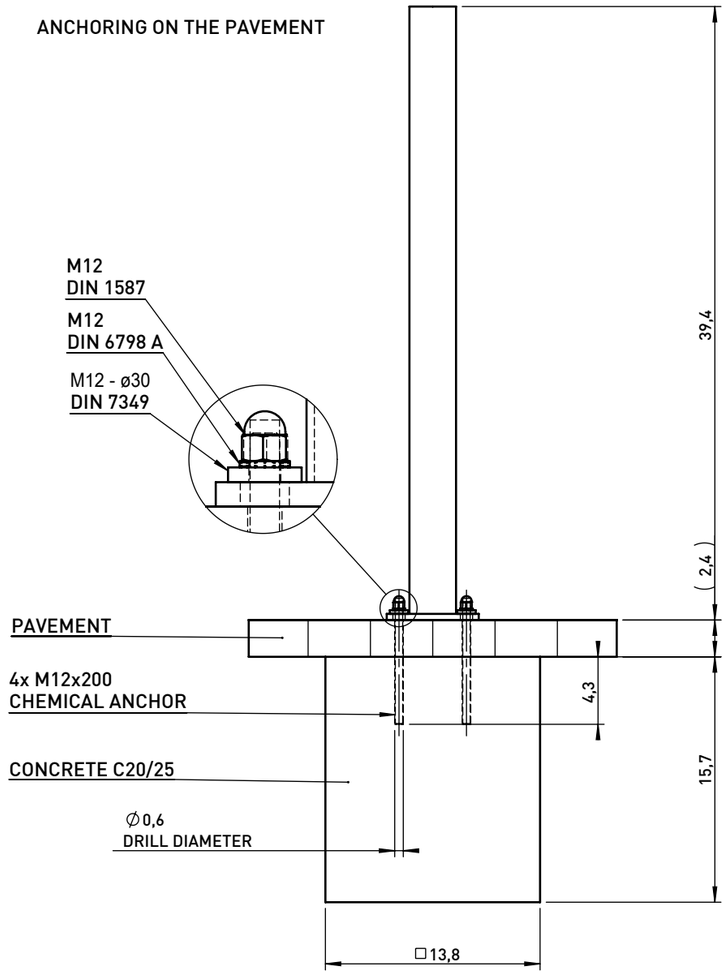

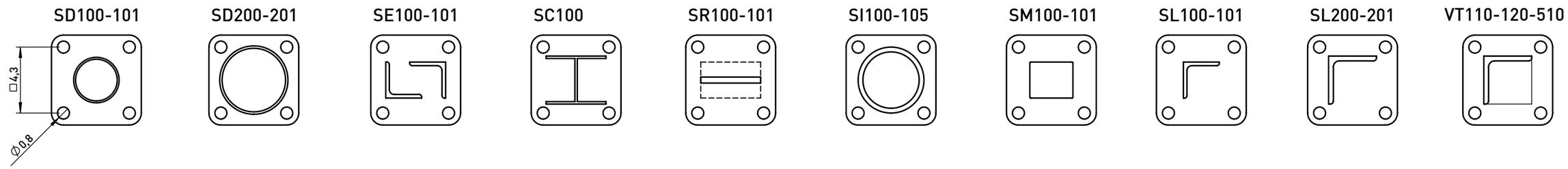

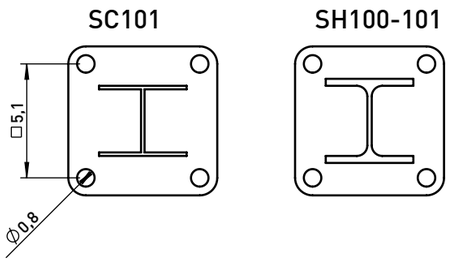

THIS DRAWING IS IN INCHES

TECHNICAL SPECIFICATIONS 3/5

BOLLARDS - UNIVERSAL FOUNDATION

mm cité 1

mmcite.com

All product sizes have an informative character. The Producer reserves the right to amend the technical specification at any time without previous warning. The size of foundation baseplate and the method of mounting of the product are imperative. Anchor spacing measure out by measurements of supplied product.

Cast column

Construction type:	Aluminium allow casting with a conical shape and round ending on the column head.
Coating:	Column cast is supplied with powdered stoving varnish, it can be made without any other surface treatment by request.
Body:	Aluminium alloy cast; with 12mm (0.5”) thick welded heel, total column weight 952mm (37”).
Colour scheme:	Shades of polyester powder coatings in the fine structure mat, standardly provided by mmcité. Other shades according to the RAL sampler are available on request.
Anchoring:	Anchoring under the paving or in compacted terrain into concrete foundation using M12 (1/2”) threaded rods. All supplies of street furniture must be fixed according to the manufacturer's technical instructions. If these indications are not met, you risk a damage of product and human consequences. The manufacturer declines any responsibility for possible damages caused, directly or indirectly, to people, animals or things caused by non-compliance with the instructions manuals and, in particular, with installing, use and service operating instruction.
Weight:	8kg (18lb)
Option:	Different colour than standard colour. Without powder colour.
Warning:	The barrier post is not certified as a guardrail or restraint system for roads. For a decision about the location of the posts are fully responsible designer, who must take into account all the circumstances of place of realization. For the location of the posts in contradiction with current legislation manufacturer accepts no responsibility.

Rozměry výrobků mají informativní charakter. Výrobce si vyhrazuje právo na změnu technické specifikace bez předchozího upozornění. Rozměry spodní stavby a způsob osazení výrobku jsou závazné. Rozteče kotev rozměřovat dle rozměrů dodaného výrobku.
All product sizes have an informative character. The producer reserves the right to amend the technical specification at any time without previous warning. The size of foundantion baseplate and the method of mounting of the product are imperative. Anchor spacing measure out by measurements of supplied product.
Die Abmessungen der Produkte sind informativ. Der Hersteller behält sich das Recht an Änderungen der technischen Spezifikationen vor, ohne vorher darauf hinzuweisen. Abmessungen der Fundamentierung – Unterbau und Art des Produkteinbaus sind verbindlich. Ankerabstand gemäß der gelieferten Produktabmessungen dimensionieren.
Dimensions des produits sont à titre informatif seulement. Le fabricant se réserve le droit de modifier les spécifications techniques sans préavis. Dimensions des fondations et manière de l’implantation du produit sont obligatoire. Ancre écartement dimensions á partir des dimensions du produit livré.
Las dimensiones de los productos tienen carácter informativo. El fabricante se reserva el derecho de cambio de la especificación técnica sin aviso previo. Tanto las dimensiones de las bases de cimentación como el sistema de fijación son inalterables. Hay que medir el espaciamiento de anclajes según las dimensiones del producto suministrado.

ILLUSTRATIVE PHOTO

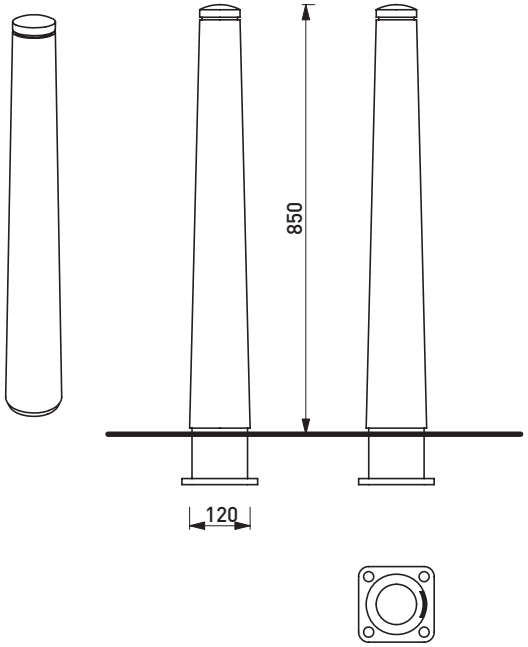

TECHNICAL SPECIFICATIONS 2/5

SI105 - ISAC

Rozměry výrobků mají informativní charakter. Výrobce si vyhrazuje právo na změnu technické specifikace bez předchozího upozornění. Rozměry spodní stavby a způsob osazení výrobku jsou závazné. Rozteče kotev rozměřovat dle rozměrů dodaného výrobku.
All product sizes have an informative character. The Producer reserves the right to amend the technical specification at any time without previous warning. The size of foundation baseplate and the method of mounting of the product are imperative. Anchor spacing measure out by measurements of supplied product.
Die Abmessungen der Produkte sind informativ. Der Hersteller behält sich das Recht an Änderungen der technischen Spezifikationen vor, ohne vorher darauf hinzuweisen. Abmessungen der Fundamentierung - Unterbau und Art des Produkteinbaus sind verbindlich. Ankerabstand gemäß der gelieferten Produktabmessungen dimensionieren.

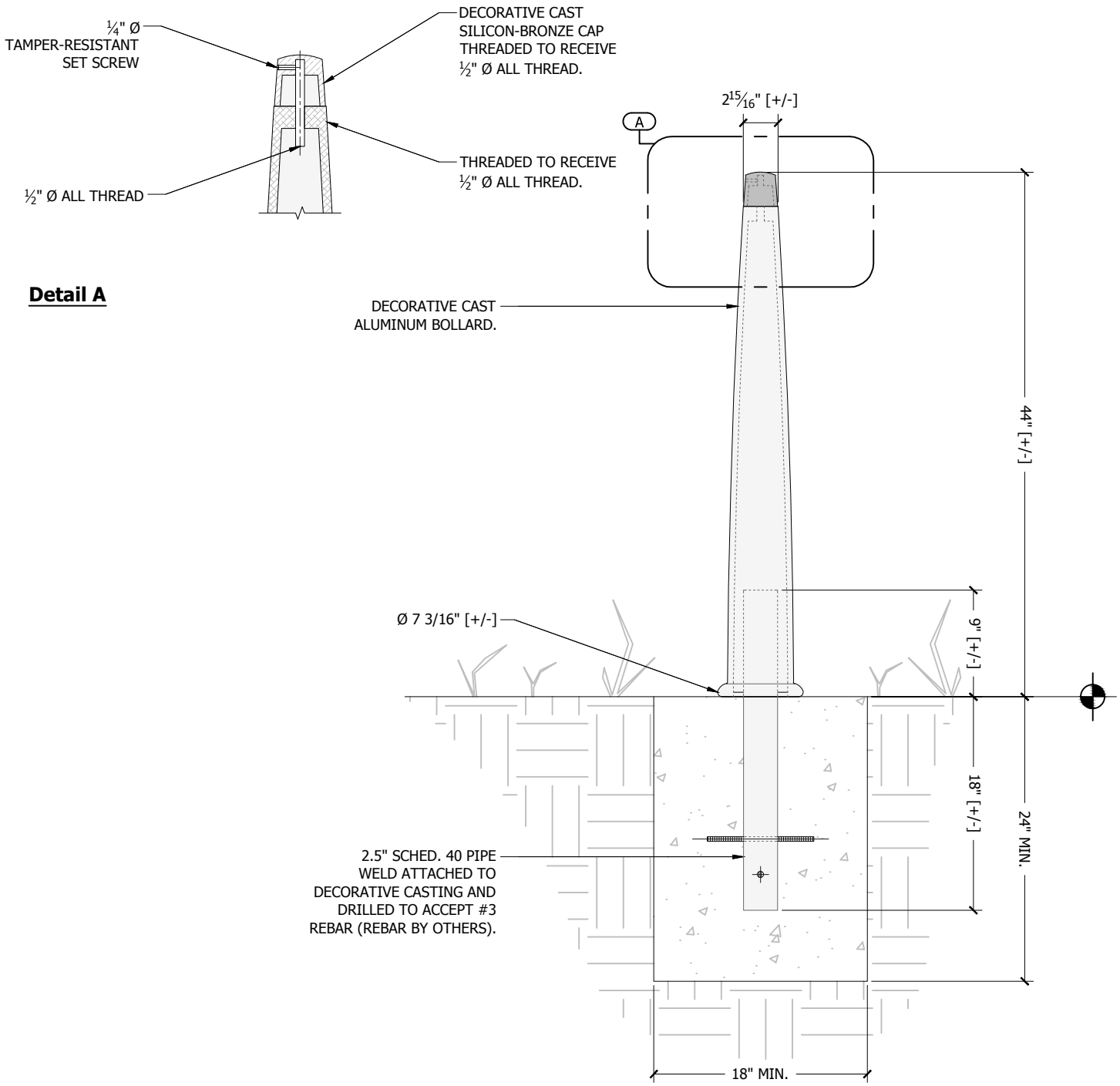

SPECIFICATIONS

- Cast components will be of 100% recycled aluminum; ASTM B261.

- Castings will be squared and flat, free of burrs, slag, air pockets, blow holes, flashing, and grinding or welding on exposed surfaces. Excessive warping or shrinkage is not acceptable.

- Fabricated components will be of structural aluminum, 6061 - T6.

- All visible welds to be ground smooth on outside edges.

- Fabrication will be true to square, or diameter and sized within 1/8".

- Finish to be powder coat, standard UA color and applied per UA specifications. If alternate color or finish is required, please provide all finish information for UA approval.

- Dimensions shown are nominal.

- For cases of "or equal" consideration, our finished, full size product should be compared with the alternative product for general quality, surface finisih, precise pattern work, metal characteristics, and overall design aesthetics.

Bollard

DG4
Cast In

Page: 1 of 1 Date: 2/7/13

URBAN ACCESSORIES
Founded 1972

465 E. FIFTEENTH ST. sales@urbanaccessories.com
TACOMA, WA 98421 www.urbanaccessories.com
(877) 487-0488

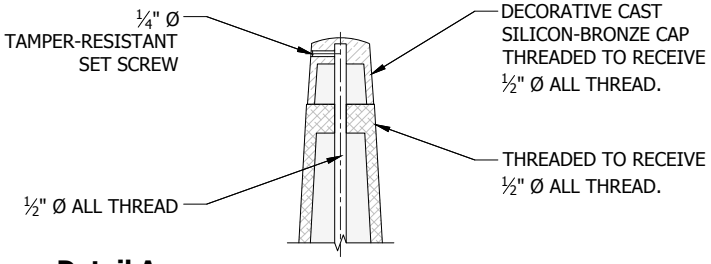

Detail A

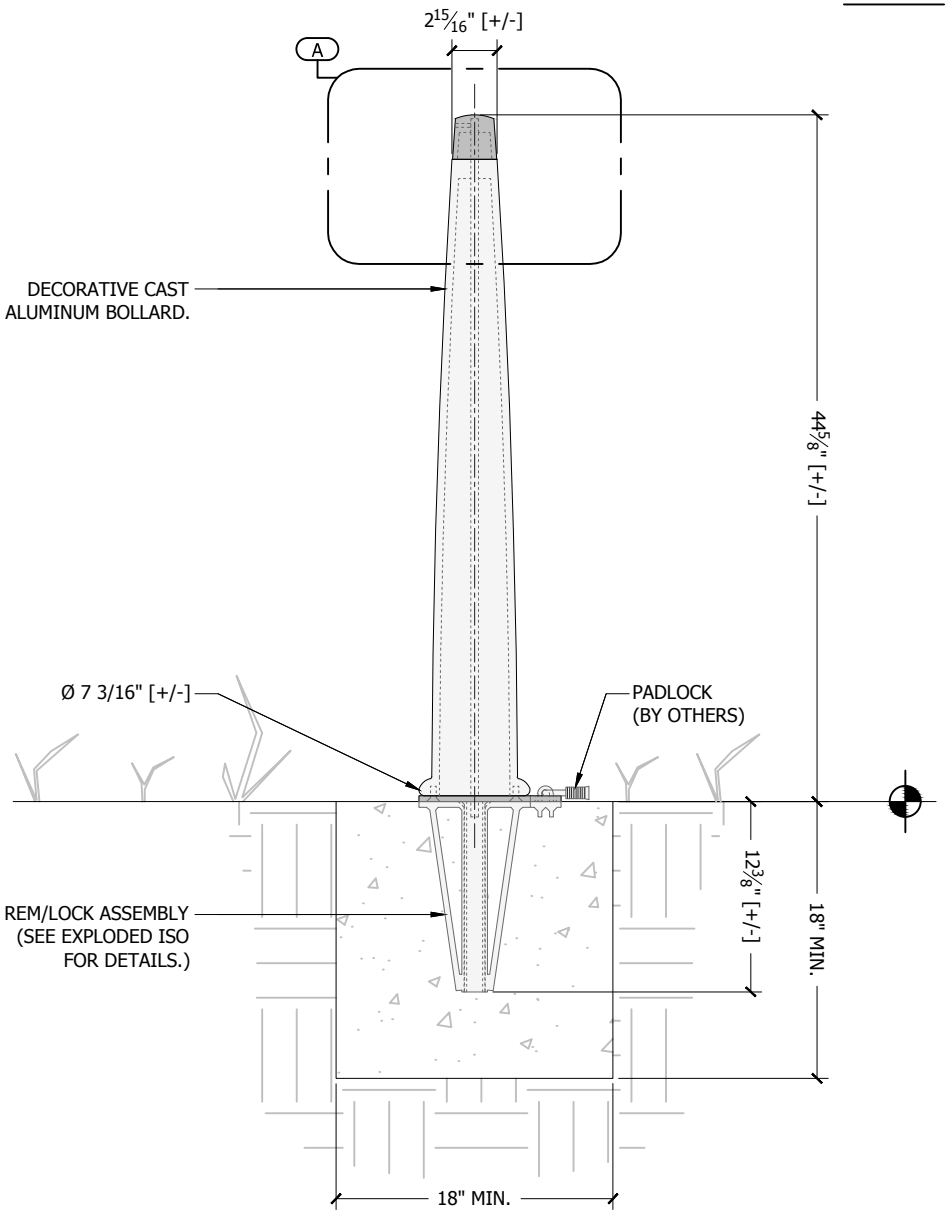

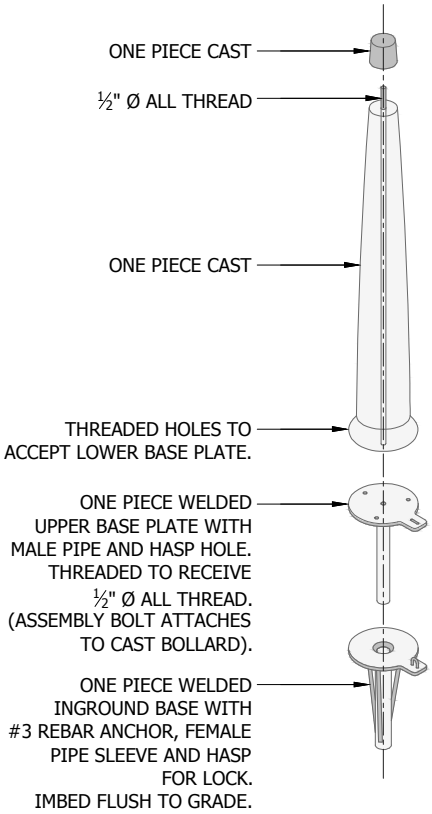

SPECIFICATIONS

- Cast components will be of 100% recycled aluminum; ASTM B261.
- Castings will be squared and flat, free of burrs, slag, air pockets, blow holes, flashing, and grinding or welding on exposed surfaces. Excessive warping or shrinkage is not acceptable.
- Fabricated components will be mild carbon steel, ASTM A36.
- All visible welds to be ground smooth on outside edges.
- Fabrication will be true to square, or diameter and sized within 1/8".
- Finish to be powder coat, standard UA color and applied per UA specifications. If alternate color or finish is required, please provide all finish information for UA approval.
- Dimensions shown are nominal.
- For cases of "or equal" consideration, our finished, full size product should be compared with the alternative product for general quality, surface finish, precise pattern work, metal characteristics, and overall design aesthetics.

Bollard

DG4
REM / LOCK

Page: 1 of 1 Date: 12/13/12

URBAN ACCESSORIES
Founded 1972

465 E. FIFTEENTH ST. sales@urbanaccessories.com
TACOMA, WA 98421 www.urbanaccessories.com
(877) 487-0488

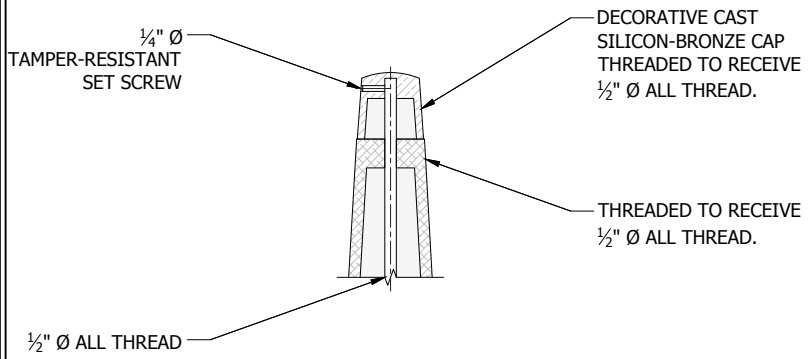

Detail A

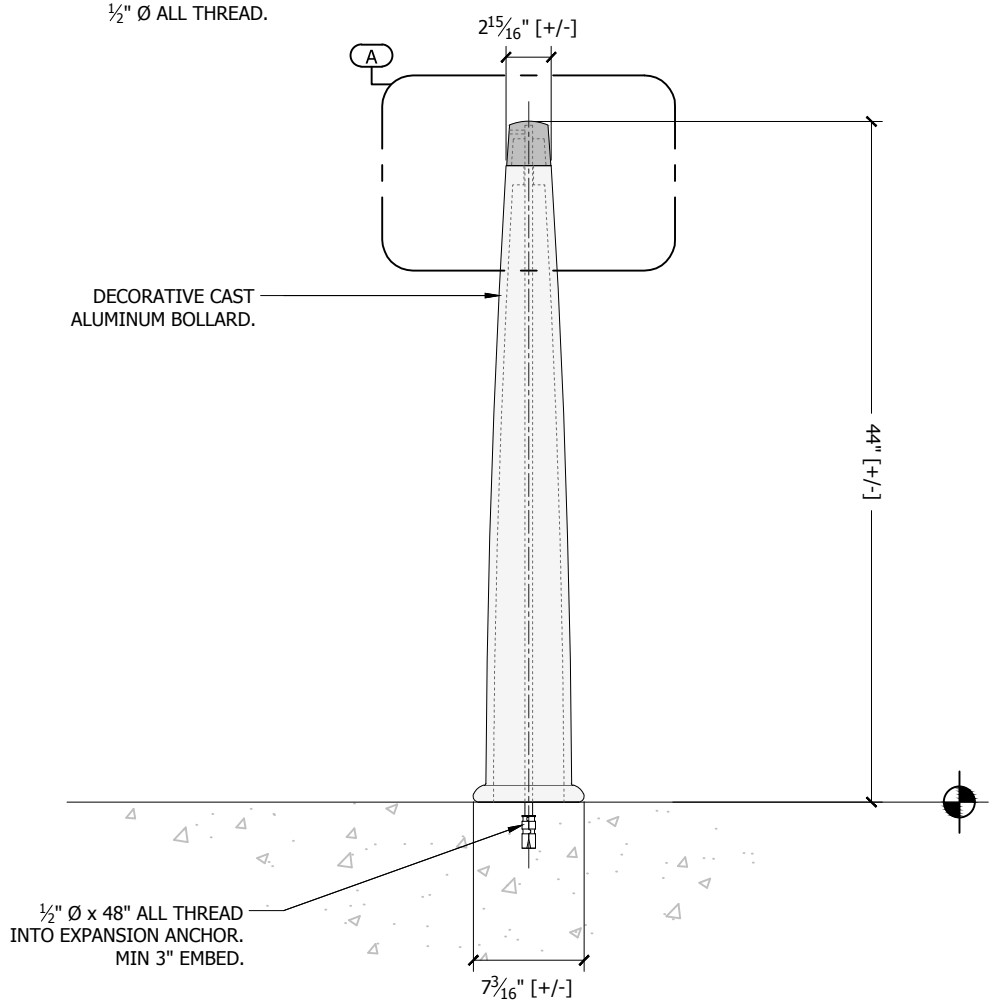

SPECIFICATIONS

- Cast components will be of 100% recycled aluminum; ASTM B261.

- Castings will be squared and flat, free of burrs, slag, air pockets, blow holes, flashing, and grinding or welding on exposed surfaces. Excessive warping or shrinkage is not acceptable.

- Fabricated components will be mild carbon steel, ASTM A36.

- All visible welds to be ground smooth on outside edges.

- Fabrication will be true to square, or diameter and sized within 1/8".

- Finish to be powder coat, standard UA color and applied per UA specifications. If alternate color or finish is required, please provide all finish information for UA approval.

- Dimensions shown are nominal.

- For cases of "or equal" consideration, our finished, full size product should be compared with the alternative product for general quality, surface finish, precise pattern work, metal characteristics, and overall design aesthetics.

Bollard

DG4
Surface Mount

Page: 1 of 1 Date: 12/13/12

URBAN ACCESSORIES
Founded 1972

465 E. FIFTEENTH ST. sales@urbanaccessories.com
TACOMA, WA 98421 www.urbanaccessories.com
(877) 487-0488

Sorella Planter
Installation Guide

Date: August 5, 2016
www.landscapeforms.com Ph: 800.521.2546

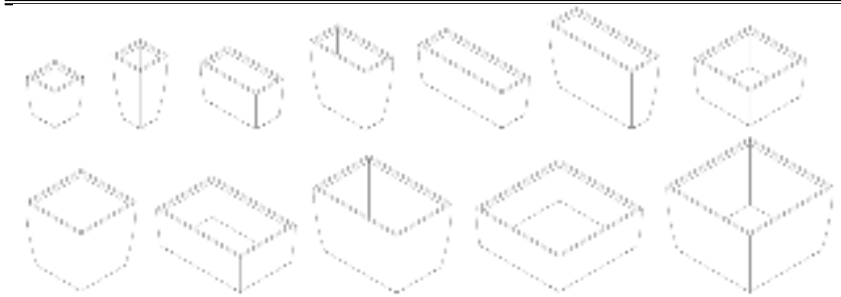

Planter Sizes

Included components:
- Planters intended for exterior use should be specified with drain holes
- Planters intended for interior use should be specified without drain holes
- Drain holes are pre-drilled at the factory. They can be added on site, before installation, if needed. Refer to Product drawings for locations.
- Anchoring hardware included for surface mount units. Setting tool for drop-in anchor is included.

2x – Surface Mount anchor, with 1/2-13 thread

2x – Drop-in 1/2-13 screw anchor, Ø5/8" O.D. x 2" length, stainless steel

2x – 1/4-20 x 1/2" Set screw

Surface Mount Hardware

	Planter Size	Capacity
	15"w x 15"d x 18"h	13 Gallons (1.7 ft³)
**	15"w x 15"d x 30"h	19 Gallons (2.5 ft³)
	30"w x 30"d x 18"h	55 Gallons (7.3 ft³)
	30"w x 30"d x 30"h	89 Gallons (11.9 ft³)
	45"w x 45"d x 18"h	127 Gallons (17 ft³)
	45"w x 45"d x 30"h	211 Gallons (28.2 ft³)
	30"w x 15"d x 18"h	26 Gallons (3.5 ft³)
**	30"w x 15"d x 30"h	40 Gallons (5.4 ft³)
	45"w x 15"d x 18"h	40 Gallons (5.4 ft³)
**	45"w x 15"d x 30"h	62 Gallons (8.3 ft³)
	45"w x 30"d x 18"h	83 Gallons (11.1 ft³)
	45"w x 30"d x 30"h	137 Gallons (18.4 ft³)

** These sizes must be surface mounted.

Tools required for surface mount installation:
- Hammer drill with 5/8" diameter masonry bits
- Hammer
- Slotted screwdriver

ASSEMBLE WITH CARE! Pangard II® Polyester Powdercoat is a strong, long-lasting finish. To protect this finish during assembly, place unwrapped powdercoated parts on packaging foam or other non-marring surface. Do not place or slide powdercoated parts on concrete or other hard or textured surface – this will damage the finish causing rust to occur. Use touch-up paint on any gouges in the finish caused by assembly tools.

landscapeforms

A. PROCEDURE FOR FREESTANDING INSTALLATION:
1. Set unit in place on level surface.
2. Fill units with specified materials.

B. ADDING OPTIONAL DRAIN HOLES:
1. Drill ½" diameter holes in locations noted on Product Drawings.
2. Do not drill drain holes in any of the four squares surrounding the raised bosses.

Fig. C.1

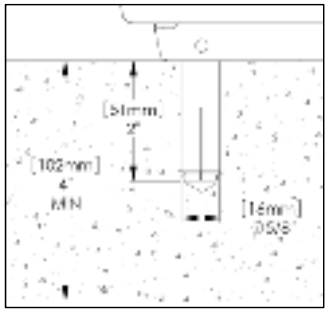

Fig. C.3

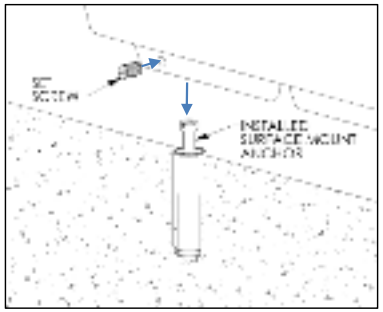

Fig. C.4

C. SURFACE MOUNT INSTALLATION PROCEDURE:
1. Turn planter upside down on non-marring surface. Thread surface mount anchors into each surface mount glide as shown in Fig. C.1.
2. Set planter in place. Trace surface mount bolt heads to mark hole locations. Remove surface mount anchors from planter.
3. Move planter and drill holes as shown in Fig. C.3. Clear holes of debris.
4. Install drop-in anchor as shown in Fig. C.4. Ensure top of anchor is flush or slightly below concrete surface. Expand with setting tool.
5. Thread surface mount anchors into drop-in anchor sleeves as shown in Fig. C.4
6. Set planters in place over surface mount anchors.
7. Thread set screws into sides of surface mount glides as shown in Fig. C.4

landscapeforms®

SORELLA

Product Data Sheet

Classic in form. Sleek in steel. Sorella is the lovely Italian word for "sister" and an apt name for this attractive family group. Sorella planters are related in their construction and softly curved rectilinear profile, complementary in their individual shapes and sizes.

Sorella

- Sorella planters may be specified in powdercoated metal.
- Planters available in rectangle or square shapes, in 18" and 30" heights.
- Fabricated, welded and ground steel panels attach to a recycled plastic base, with glides and optional drain holes.
- Planter bases and glides are compression-molded recycled plastic resulting from an innovative, patented melting process that utilizes 100% post-consumer and post-industrial waste.
- This unique process blends several material types, channeling more discarded plastics away from the landfill and into new life.
- Bases are 100% recyclable.

Finishes

- All metal is finished with Landscape Forms' proprietary Pangard II® polyester powdercoat, a hard yet flexible finish that resists rusting, chipping, peeling and fading.
- A wide range of standard, optional and custom colors are available.

To Specify

- Select Sorella planter, product description and size.
- Select powdercoat metal color.
- Specify with or without drain holes.

Designed by Robert Chipman, ASLA

	STYLE	DEPTH	WIDTH	HEIGHT	PRODUCT WEIGHT
	freestanding	15"	15"	18"	29 lb
	freestanding	30"	30"	18"	74 lb
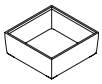	freestanding	45"	45"	18"	129 lb
	freestanding	30"	15"	18"	48 lb
	freestanding	45"	15"	18"	67 lb
	freestanding	45"	30"	18"	96 lb
	surface mounted	15"	15"	30"	39 lb
	freestanding	30"	30"	30"	96 lb
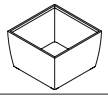	freestanding	45"	45"	30"	165 lb
	surface mounted	30"	15"	30"	65 lb
	surface mounted	45"	15"	30"	90 lb
	freestanding	45"	30"	30"	125 lb

Landscape Forms, Inc. | 800.521.2546 | F 269.381.3455 | 7800 E. Michigan Ave., Kalamazoo, MI 49048

36"w X 36"d X 24"h

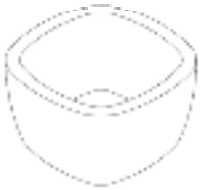

48"w X 48"d X 30"h

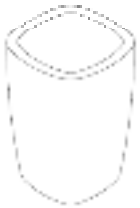

32"w X 32"d X 48"h

Included components

- Planter

Capacity:

Planter Size	Capacity	Weight of Planter (empty)
36"w X 36"d X 24"h	52 Gallons (7 ft³)	757 lbs.
48"w X 48"d X 30"h	127 Gallons (17 ft³)	1582 lbs.
32"w X 32"d X 48"h	75 Gallons (10 ft³)	1362 lbs.

CAUTION! These planters are heavy. The planters should be moved with care to protect the base and rims from chipping. Do not place on their side or top. Keep the planter upright at all times except if placed on a soft surface, such as a carpeted furniture dolly. Because of their weight, distance moving is best accomplished by placing the planter on a reinforced pallet and moving it with a forklift.

PROCEDURE FOR INSTALLATION:

1. Set unit in place on level surface.
2. Fill units with specified materials.

DRAIN HOLES:

Each planter has one 2” diameter drain hole in the center of the base of the planter. The 36”w x 36”d x 24”h planter is 3” thick at the base, while the 48”w x 48”d x 30”h planter and the 32”w x 32”d x 48”h planter are 3-1/2” thick at the base.

Drain holes may not be added in the field.

landscapeforms®

LARKSPUR™

Product Data Sheet

Subtle in shape and commanding in size, these beautifully proportioned cast concrete planters by designer Larry Kornegay are, like their namesake flower, products of nature and no two are exactly alike.Cast concrete lends compelling individuality in surface qualities that give each Larkspur planter its own variations and visual interest. The strength and durability of the material ensures performance in all climates while weather and age impart a patina that attests to its timelessness.

Planter

- Larkspur planters are available in three sizes.
- Constructed of cast concrete, pricing includes the planter in a variety of standard colors.
- The 24"h planter is a 36" square planter with rounded corners and holds approximately 7 cubic feet (52 gallons) of planting material.
- The 30"h planter is a 48" square planter with rounded corners and holds approximately 17 cubic feet (127 gallons) of planting material.
- The 48"h planter is a 32" square planter with rounded corners and holds approximately 10 cubic feet (75 gallons) of planting material.

	STYLE	DEPTH	WIDTH	HEIGHT	PRODUCT WEIGHT
	48"	32"	32"	48"	1,432 lb
	24"	36"	36"	24"	800 lb
	30"	48"	48"	30"	1,707 lb

Material

- Concrete is the traditional mixture of sand, rocks (aggregate), water and the binding materials cement and fly ash.
- When appropriate, additives are included that enhance the concrete's durability in cold weather conditions.
- The strength of the concrete is tested regularly, and measures between 5000-6000psi.

To Specify

- Specify Larkspur planter size and standard color.
- Planters are freestanding and ship with a standard 2" drain hole.
- See materials sheet for color options.

Designed by Larry Kornegay

Visit our landscapeforms.com for more information. Specifications are subject to change without notice.
Landscape Forms supports the Landscape Architecture Foundation at the Second Century level.
©2016 Landscape Forms, Inc. Printed in U.S.A.

Landscape Forms, Inc. | 800.521.2546 | F 269.381.3455 | 7800 E. Michigan Ave., Kalamazoo, MI 49048

Downtown Collection

Modern is the new classic!

By adding a distinctive curve and soft corners, Tournesol Siteworks has created a new classic container, the Downtown Collection. Using tall, elegant proportions typical of the new modern, it adds flair to any project. All round, square and rectangular shapes carry the distinctive proportions, while available shallower round sizes are useful for flower and color displays.

- **Lightweight FRP fiberglass and GFRC designed to be durable despite low weight - even for heavy-traffic locations**
- **Coordinates with our self-watering container irrigation products**
- **Metallic FRP finishes will naturally weather over time, like metal containers**
- **Round, square and rectangular sizes from 18" to 60", with customization available**
- **Matching ash, trash available**

Downtown Round

Materials & Finishes - Metal Infused finishes (Aluminum, Bronze, Copper and Iron) combine the light weight and durability of FRP with the natural patina of real metal. The metal will oxidize naturally, depending on the location and condition of the installation. For those that love the look of the metal but want to keep the color the way it starts, we offer a Metal Matched Paint that simulates the color. Our economical standard paint finishes use a high-quality industrial grade acrylic enamel in a variety of architectural colors.

Downtown Shallow Round
Shark (with texture)

Downtown Square
Chapparal

Tournesol SITEWORKS

tournesolsiteworks.com
800.542.2282

Rounds

Part No.	Material	Exterior Size (top x bottom x ht)	Interior Size (top x bottom x ht)	Weight (lbs.)	Soil Volume (cubic ft.)	Matching Irrigation
DS-1800	FRP	18″ x 13.5″ x 18″	14″ x 13″ x 17.5″	11	2	CWM-1114-MS
DS-2400	FRP	24″ x 15.5″ x 27″	20″ x 15″ x 26.5″	21	4.7	CWC-1600/CWM-1114-2k
DS-2418	FRP	24″ x 13″ x 18″	20″ x 12.5″ x 17.5″	15	2.8	CWC-1600/CWM-1109-2k
DS-3000	FRP	30″ x 18.5″ x 32″	26″ x 18″ x 31.5″	32	8.4	CWC-2100/CWM-1714-2k
DS-3600	FRP	36″ x 22.5″ x 34″	32″ x 22″ x 33.5″	42	13	CWC-2800/CWM-1714-3k
DS-3624	FRP	36″ x 18″ x 24″	32″ x 17.5″ x 23.5″	32	8	CWM-1714-2k
DS-3642	FRP	36″ x 22.5″ x 42″	32″ x 22″ x 41.5″	50	15	CWC-2800/CWM-1720-3k
DS-4200	FRP	42″ x 26.5″ x 36″	38″ x 26″ x 35.5″	52	19	CWC-3300/CWC-1720-3k
DS-4800	FRP	48″ x 32″ x 36″	44″ x 31.5″ x 35.5″	65	28.5	CWM-1720-5k
DS-4824	FRP	48″ x 30.5″ x 24″	44″ x 30″ x 23.5″	46	16.5	CWM-2914-MS
DS-6000	FRP	60″ x 38″ x 42″	56″ x 39″ x 41.5″	90	45	CWM - 2920-2k
DS-6024	FRP	60″ x 42″ x 24″	56″ x 41″ x 23.5″	63	28.4	CWM 2914-2k
DS-7200	FRP	72″ x 50″ x 42″	68″ x 48″ x 41.5″	150	93	CWM-2920-2k
DCS-2400	GFRC	24″ x 15.5″ x 27″	20″ x 13.5″ x 26″	125	3.2	CWC-1600/CWM-1114-2k
DCS-2418	GFRC	24″ x 13″ x 18″	20″ x 12.5″ x 17″	85	2.5	CWC-1600/CWM-1114-2k
DCS-3000	GFRC	30″ x 18.5″ x 32″	26″ x 16.5″ x 31″	185	6.7	CWC-2100/CWM-1714-2k
DCS-3600	GFRC	36″ x 22.5″ x 34″	32 x 20.5″ x 33″	240	11	CWC-2500/CWM-1714-3k
DCS-3624	GFRC	36″ x 18″ x 24″	32″ x 16″ x 23″	160	8	CWM-1714-2k
DCS-4200	GFRC	42″ x 26.5″ x 36″	38″ x 24.5″ x 35″	300	16	CWC-3300/CWM 1720-3k
DCS-4800	GFRC	48″ x 32″ x 36″	44″ x 30.5″ x 35″	360	26.5	CWM-1720-5k
DCS-4824	GFRC	48″ x 30″ x 24″	44″ x 28″ x 23″	245	16	CWM-2914-MS
DCS-6000	GFRC	60″ x 38″ x 42″	56″ x 39″ x 41.5″	515	28	CWM-2920-2k
DCS-6024	GFRC	60″ x 42″ x 24″	56″ x 41″ x 23.5″	355	28	CWM 2914-2k

Squares

Part No.	Material	Exterior Size (top x bottom x ht)	Interior Size (top x bottom x ht)	Weight (lbs.)	Soil Volume (cubic ft.)	Matching Irrigation
DR/DCR-2400	FRP/GFRC	24″ x 15.5″ x 24″	21″ x 15″ x 23.5″	40/250	4.75/4.8	CWC-R1850/CWM-R1114-2k
DR-3000	FRP	30″ x 18.5″ x 32″	26″ x 18″ x 31.5″	65	11	CWM-R2014-MS
DR/DCR-3600	FRP/GFRC	36″ x 22″ x 34″	32″ x 22″ x 33.5	75/475	16.75/16	CWM-R2014-2k
DR-4200	FRP	42″ x 28.5″ x 34″	38″ x 28″ x 33.5″	85	23	CWM-R2014-2k
DR/DCR-4800	FRP/GFRC	48″ x 26.5″ x 42″	44″ x 26″ x 41.5″	110/700	33/30	CWM-R2020-4k
DR-6000	FRP	60″ x 45″ x 42″	56″ x 45″ x 41.5″	123	64	CWM-R2020-4k

Tournesol SITEWORKS
tournesolsiteworks.com
800.542.2282

Rectangles

Part No.	Material	Exterior (top)	(bottom)	(ht)	Interior (top)	(bottom)	(ht)	Weight (lbs.)	Soil Vol. (cubic ft.)	Matching Irrigation
DR-241818	FRP	24″ x 18″	20.5″ x 14″	18″	20″ x 14″	20″ x 13.8″	17.5″	25	3.4	CWM-R1114-MS
DR-361818	FRP	36″ x 18″	32.5″ x 14″	18″	32″ x 14″	32″ x 13.8″	17.5″	35	5.3	CWM-R1114-2k
DR-362424	FRP	36″ x 24″	29″ x 17″	24″	32″ x 20″	29″ x 17″	23.5″	40	8.5	CWM-R1120-2k
DR-481818	FRP	48″ x 18″	44.5″ x 14″	18″	44″ x 14″	44″ x 13.8″	17.5″	40	7	CWM-R1614-2k
DR-482424	FRP	48″ x 24″	41.5″ x 17.5″	24″	44″ x 20″	41″ x 17″	23.5″	45	11.5	CWM-R1620-2k
DR-601818	FRP	60″ x 18″	56.5 x 14″	18″	56″ x 14″	56″ x 13.8″	17.5″	50	9	CWM-R2014-2k
DR-602424	FRP	60″ x 24″	53″ x 17″	24″	56″ x 20″	53″ x 17″	23.5″	55	15	CWM-R2020-2k
DCR-241818	GFRC	24″ x 18″	20.5″ x 14″	18″	20″ x 14″	18.5 x 12″	17″	150	3	CWM-R1114-MS
DCR-361818	GFRC	36″ x 18″	32.5 x 14″	18″	32″ x 14″	30.5″ x 12″	17″	200	4	CMW-R1114-2k
DCR-481818	GFRC	48″ x 18″	44.5″ x 14″	18″	44″ x 14″	42.5″ x12″	17″	250	6.4	CWM-R1614-2k
DCR-601818	GFRC	60″ x 18″	56.5″ x 14″	18″	56″ x 14″	54.5″ x12″	17″	300	8	CWM-R2014-2k

Site Furnishings (for more options, see the site furnishings detail sheet)

Part No.	Code	Material	Shape	Exterior Dimensions	Description
DS/DCS	-TRS	FRP/GFRC	Round/Sq.	24″dia x 30″H	Round aluminum anodized trash lid, black, 9″ opening (all).
DS/DCS	-ATR	FRP/GFRC	Round	24″dia x 30″H	Round aluminum anodized ash-trash lid, black, 9″ trash opening with 2.5″ concentric ash ring.
DS/DCS	-TFR	FRP/GFRC	Round	24″dia x 30″H	Round FRP trash lid, color to match container, 9″ opening (all round)
DR/DCR	-TFF	FRP/GFRC	Square	22″Sq. x 34.5″H	Square FRP trash lid, color to match container, 9″ opening (all square)
DC/DR	-AFR	FRP/GFRC	Round	22″Sq. x 34.5″H	Round FRP ash-trash lid, color to match container, 9″ trash opening with 2.5″ inset plated-steel concentric ash ring
DR/DCR	-AFF	FRP/GFRC	Square	22″Sq. x 34.5″H	Square FRP ash-trash lid, color to match container, 9″ trash opening with 2 each 3″ x 10″ inset plated-steel ash trays

BETWEEN LANDSCAPE +ARCHITECTURE

Tournesol SITEWORKS
tournesolsiteworks.com
800.542.2282

©2017,
Tournesol Siteworks

Guide Specification

Tournesol Siteworks Fiberglass Planters and Planter Liners

1.0 GENERAL

1.1 WORK INCLUDED

A. Provision of fiberglass planters and planter liners

1.2 RELATED WORK

A. Section 03300 Cast-in-Place concrete
B. Section 06100 Rough Carpentry
C. Section 06200 Finish Carpentry

1.3 SUBMITTALS

A. Product Data: Manufacturer's standard catalog cut sheets.
B. Samples: As required for color selection or material thickness only.
C. Shop Drawings: For custom applications, showing critical sizes and dimensions for installation and integration with other work.

1.4 DELIVERY, STORAGE AND HANDLING

A. Unwrap and inspect planters and planter liners after delivery for signs of damage during transit.
B. Protect planters and planter liners from damage during storage and handling.
C. Store planters and planter liners indoors if possible. Do not stand or walk on planters or planter liners.

1.5 PROJECT CONDITIONS

A. Contractor to provide adequate structural support for planter liner units. Unless otherwise specified, planters and liners should have continuous basal support.
B. Protect units from damage by adjacent work.

2.0 PRODUCTS

2.1 ACCEPTABLE PRODUCTS/MANUFACTURERS

A. Fiberglass Planters and planter liners, manufactured by Tournesol Siteworks LLC. 30955 San Antonio St., Hayward, CA 94544 Tel: (800) 542-2282 FAX (510) 471-6243

2.2 FIBERGLASS PLANTERS AND PLANTER LINERS

A. Materials - All parts shall be constructed of glass fiber reinforced polyester resin, using either the hand-layup or spray-layup methods.

1. Glass fibers shall be PPG or equivalent. For hand layup fibers should be uniform chopped strand mat, minimum 3 oz. density. Smaller round containers will use one layer of mat (or spray equivalent), smaller squares and larger round containers must use two layers (or spray equivalent), larger square and rectangular containers must use min. 3 layers (or spray equivalent).
2. Polyester resin shall be compounded by a reputable manufacturer. All planters and planter liners will be fabricated of 100% resin – inorganic fillers will not be acceptable.
3. Gel coating (where necessary) shall be of specified color. Metallic finishes will use atomized metal thoroughly blended with polyester resin, and applied over clean surfaces.

4. Painted finishes will be made of polyurethane low VOC (less than 2.8 VOC) enamel with excellent corrosion and chemical resistance by PPG (AUE 280) or equivalent.

B. Construction

Architectural parts shall be fabricated by hand-layup, spray laminate, or resin transfer method using suitable molds to attain the desired surface finish. The finished reinforced plastic material shall be not less than 5/32" thick and thicker in those areas requiring additional structural strength.

Where ribs or stiffeners are to be fastened to liner sections by spray laminating over premolded forms, the stiffeners or ribs shall be located and spray laminated into position so that the finished joint shall conform to performance specifications below.

For vertical surface reinforcement, an inorganic honeycomb strengthening layer using double-veiled, bonded material shall be located and hand- or spray-laminted into position prior to the wall material setting. The entire honeycomb panel must be subject to pressure during curing to ensure proper bonding to wall. Honeycomb thickness will be minimum ¼”, or thicker as required for larger spans. Marine-grade plywood may be substituted for bottom panels to be penetrated with drainage or irrigation holes.

Interior of planter or planter liner to be waterproofed with additional layer of black gel coating, additional waterproofing available as specified.

C. Performance characteristics and capacities, finished product to yield the following minimum performances:

Hardness, Barcol	50
Tensile Strength, Ultimate	12500 psi
Elongation at break	1.3%
Modulus of Elasticity	1020 ksi
Flexural Modulus	754 ksi
Flexural Yield Strength	27600 psi
Compressive Yield Strength	21800 psi
Glass content, average	35%

Vertical wall panels will not deform more than L/200 when loaded with 80 lbs/cu ft. soil mass. Similar performance with heavier media is available per specification.

D. Finish: specified finish; factory finished.

E. Sizes: Modular units fabricated to size by manufacturer as required to fill specified areas. Refer to catalog for standard sizes. Custom sizes as per approved shop drawings.

F. Fire retardant requirement can be met with the addition of retardant chemicals to the resin. Additional information is available for this specification.

2.3 PLANTER ACCESSORIES

A. Field installed drainage/irrigation connection fitting. Thread-by-thread thermoplastic drainage adapter, ½”, ¾” and 1"NPT female thread available. Contractor to locate drainage hole, drill as necessary, and install fitting.

B. Lifting hooks or stabilizer anchors, quantity, size, and capacity as specified.

3.0 EXECUTION

3.1 PREPARATION

A. Prior to planter or planter liner fabrication, the contractor shall verify as-built dimensions of planter area or receptacles to ensure proper size, fit and quantity required.[1]

B. Unless planters have drainage fittings as in 2.3.A, drainage holes to be located and made by contractor in the field to fit to drainage system.

3.2 INSTALLATION

A. Install planter liners to allow for easy removal if necessary.
B. Provide continuous basal support.
C. Install liners level to permit adequate drainage and irrigation.

---

[1] Field verification of actual planter receptacle size is frequently overlooked by the contractor, and can lead to delays and additional cost if neglected.

Guide Specification

Section 129300 Site Furnishings
Section 129200 Interior Planters

Tournesol Siteworks GFRC Planters, Saucers, and Site Furnishings

1.0 GENERAL

1.1 WORK INCLUDED

A. Provision of lightweight concrete planters, saucers, and sitefurnishings.

1.2 RELATED WORK

A. Section 03300 Cast-in-Place concrete
B. Section 06100 Rough Carpentry
C. Section 06200 Finish Carpentry

1.3 SUBMITTALS

A. Product Data: Manufacturer's standard catalog cut sheets.
B. Samples: As required for color selection or material thickness only.
C. Shop Drawings: For custom applications, showing critical sizes and dimensions for installation and integration with other work.

1.4 DELIVERY, STORAGE AND HANDLING

A. Inspect GFRC products after delivery for signs of damage during transit.
B. Protect planters and site furnishings from damage during storage and handling.
C. Store planters and planter liners out of harm's way, in their original packaging.

1.5 PROJECT CONDITIONS

A. Contractor to provide adequate structural support for planters and site furnishings.
B. Protect units from damage by adjacent work. Clean units with water spray to remove workplace dust.

2.0 PRODUCTS

2.1 ACCEPTABLE PRODUCTS/MANUFACTURERS

A. GFRC planters, saucers and site furnishings, manufactured by Tournesol Siteworks, 30955 San Antonio Rd., Hayward, CA 94544 Tel: (800) 542-2282 FAX (510) 471-6243

2.2 GFRC PLANTERS AND PLANTER LINERS

A. Materials
1. Portland Cement: ASTM C150, Type I, II, or III.
2. Glass Fibers: Alkali resistant, with a minimum zirconia content of 16 percent, 1 to 2 inches long, specifically produced for use in GFRC.
3. Sand: clean silica, complying with composition requirements of ASTM C144; passing No. 30 sieve with a maximum of 2 percent passing No. 100 sieve.
4. Coloring Admixture: ASTM C979, synthetic mineral-oxide pigments or colored water-reducing admixtures, temperature stable, nonfading, and alkali resistant.

5. Water: Potable; free from deleterious material that may affect color stability, setting, or strength of GFRC ..
6. Polymer Curing Admixture: Acrylic thermoplastic copolymer dispersion complying with PCI MNL 130.

B. Construction

Architectural parts shall be fabricated by spray laminate method using suitable molds to attain the desired surface finish. The finished face mix shall be not less than 1/8" thick and thicker in those areas requiring additional structural strength.Where ribs or stiffeners are to be fastened to liner sections by spray laminating over premolded forms, the stiffeners or ribs shall be located and spray laminated into position before the section to which they are to be attached has passed the state of curing, and the finished joint shall be strong and durable.

1. Backing Mix: Proportion backing mix of portland cement, glass fibers, sand, and admixtures to comply with design requirements. Provide nominal glass-fiber content of not less than 5 percent by weight of total mix.
2. Face Mix: Proportion face mix of portland cement, sand and admixtures to comply with design requirements.
3. Polymer Curing Admixture: 6 to 7 percent by weight of polymer curing admixture solids to dry portland cement.
4. Coloring Admixture: Not to exceed 10 percent of cement weight.

D. Finish: specified finish; factory finished.

E. Sealing: Planters are to be dampproofed on the interior. Site furnishings and planters in the acid-etch finish are to be sealed, adding a mild sheen to the finish. Travertine products remain unsealed.

E. Sizes: Modular units fabricated to size by manufacturer as required to fill specified areas. Refer to catalog for standard sizes.

2.3 PLANTER ACCESSORIES (OPTIONAL)

A. Field installed drainage/irrigation holes. Drainage holes may be pre-drilled by factory, to specified location determined by client.

B. Drainage control products, including pump-out pipe, sleeved corrugated drainage pipe, and, if necessary, overflow drains and atrium drain covers.

2.3 SITE FURNISHING ACCESSORIES (OPTIONAL)

A. Anchoring elements to fasten benches and tables to surface. See specific product detail for exact type of anchor, mounting points.

B. Skateboard deterrent stops available for GFRC benches and stools as required.

3.0 EXECUTION

3.1 PREPARATION

A. Prior to fabrication, the contractor shall verify as-built dimensions of area for products to ensure proper size, fit and quantity required.

B. Unless planters have drainage fittings as in 2.3.A, drainage holes to be located and made by contractor in the field to fit to drainage system.

3.2 INSTALLATION

A. Move product into position on pallets, where possible. Otherwise, slings are required, and must wrap the product fully.
B. Provide continuous basal support for product.
B. Install product level (or shim to level) to permit adequate drainage and irrigation.
C. Refer to product detail and manufacturer instructions to determine proper location for anchor points. Use manufacturer template if available.

Smartbelly® Standard Capacity Station

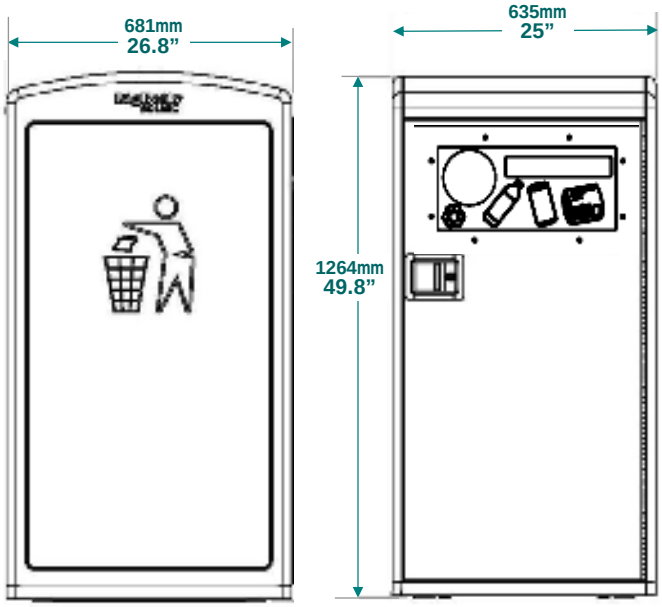

Configurations: Mixed waste or single-stream recycling (with appropriate markings)

Materials

RoHS compliant

Galvanized sheet metal steel interior and exterior construction

Heavy duty plastic side panels for dent and scratch resistance (recycled content)

Interior Bin: Single bin is leak proof made out of low density polyethylene plastic

Power & Electronics

Polycrystalline silicon cell PV module (22 watts). (40 watts HE [high energy] upgrade available)

PV panel protected by polycarbonate bubble

Spill-proof, sealed maintenance-free battery

Self-powered unit requires no wiring

Technical Specifications (SB5)

Overall Machine Dimensions

Height: 49.8" (1264mm)

Width: 25” (635mm)

Depth: 26.8" (681mm)

Weight: 175 lbs (80kg); Shipping weight: 205 lbs (136kg)

Insertion Opening: Can be configured for multiple recycling or waste streams.

Bin Volume: 50 gallons (189L)

Features

Fully automated, microprocessor controlled system senses fullness and machine status

LED status indicate fullness level, machine status and error codes

GPRS or CDMA wireless data link for remote monitoring and management

GPS assisted location service

Safety Features

CE approved

Fully interlocked access doors protect users and service personnel

Locked front trash removal door. (Locked rear door option available)

Separately keyed service access

Durability

Weather resistant, UV stabilized polyester powder-coat finish on all exterior parts

Electronic components temperature range of -40ºF to +185ºF (-40ºC to +85ºC)

Fully weatherized, but in the event of a flood, Smartbelly can withstand up to 40” (1.06m) of water without harming electronics

Bigbelly Solar, Inc.
150 A Street – Suite 103
Needham, MA 02494 USA

Bigbelly CHANGE YOUR SPACE

Sales@Bigbelly.com
Bigbelly.com

Toll-free: +1 888.820.0300
International: +1 781.444.6002
FAX: +1 781.444.5651

Station Dimensions

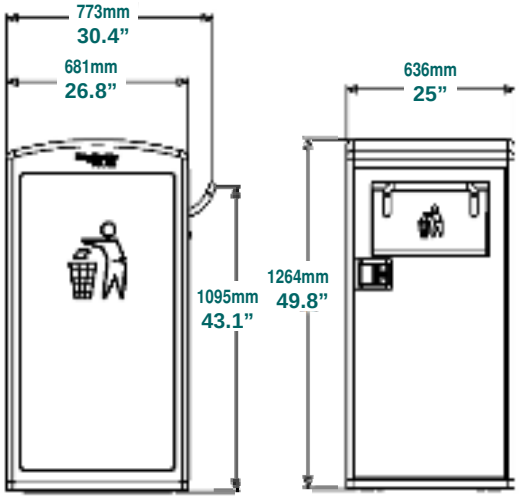

Bigbelly single station
Approximately 270 lbs (123kg)

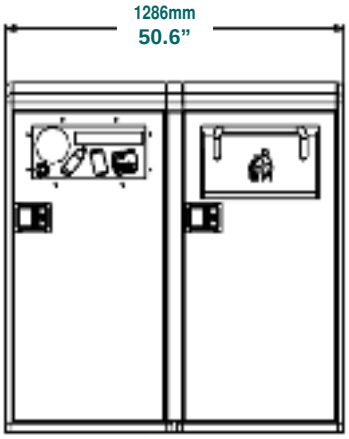

Bigbelly & Smartbelly double station
Approximately 445 lbs (202kg)

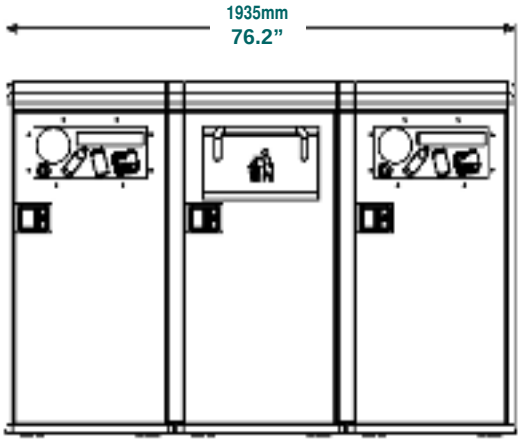

Bigbelly & Smartbelly triple station
Approximately 610 lbs (277kg)

Overall Dimensions	Bigbelly® High Capacity	Smartbelly® Standard Capacity	Smartbelly® Companion
Height	49.8” (1264mm)	49.8” (1264mm)	49.8” (1264mm)
Width	25” (635mm)	25” (635mm)	25” (635mm)
Depth	26.8” (681mm)	26.8” (681mm)	26.8” (681mm)
Handle Height	43.1” (1095mm)	-	-
Weight	270 lb (122kg)	175 lb (80kg)	164 lb (75kg)
Shipping Weight	300 lb (136kg)	205 lb (93kg)	205 lb (93kg)
System Voltage	12V	12V	-
Insertion Opening (see below)	6” x 17” (15.2cm x 43.2cm)	Can be configured for multiple recycling or waste streams.	Can be configured for multiple recycling or waste streams.
Bin Volume	33 gallons (125L) compacted; 150 gallons uncompacted	50 gallons (189L)	50 gallons (189L)
Other			
Liner Bags	Custom Bigbelly Liner Bags (#BBS-CB4647 or #BBS-RCB4647) are available for purchase. Contact WasteZero at 800.866.3954 or *www.WasteZero.com/Bigbelly*. The black or clear bags are 47”H x 46”W (120cm x 117cm) and 2.5mil (64µ) thick.	Custom Smartbelly Liner Bags (#BBS-RB4255) are available for purchase. Contact WasteZero at 800.866.3954 or *www.WasteZero.com/Bigbelly*. The clear bags are 55”H x 42.5”W (140cm x 108cm) and 1.25mil (32µ) thick.	Custom Smartbelly Liner Bags (#BBS-RB4255) are available for purchase. Contact WasteZero at 800.866.3954 or *www.WasteZero.com/Bigbelly*. The clear bags are 55”H x 42.5”W (140cm x 108cm) and 1.25mil (32µ) thick.

Bigbelly Hoppers

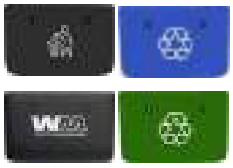

Smartbelly Flaps

Smartbelly Faceplates

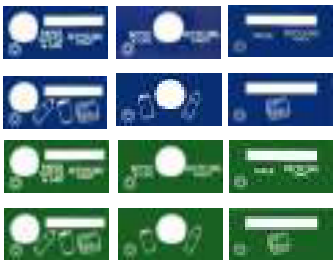

PLEASE NOTE: Green hoppers, faceplates or flaps require additional 6 weeks to process.

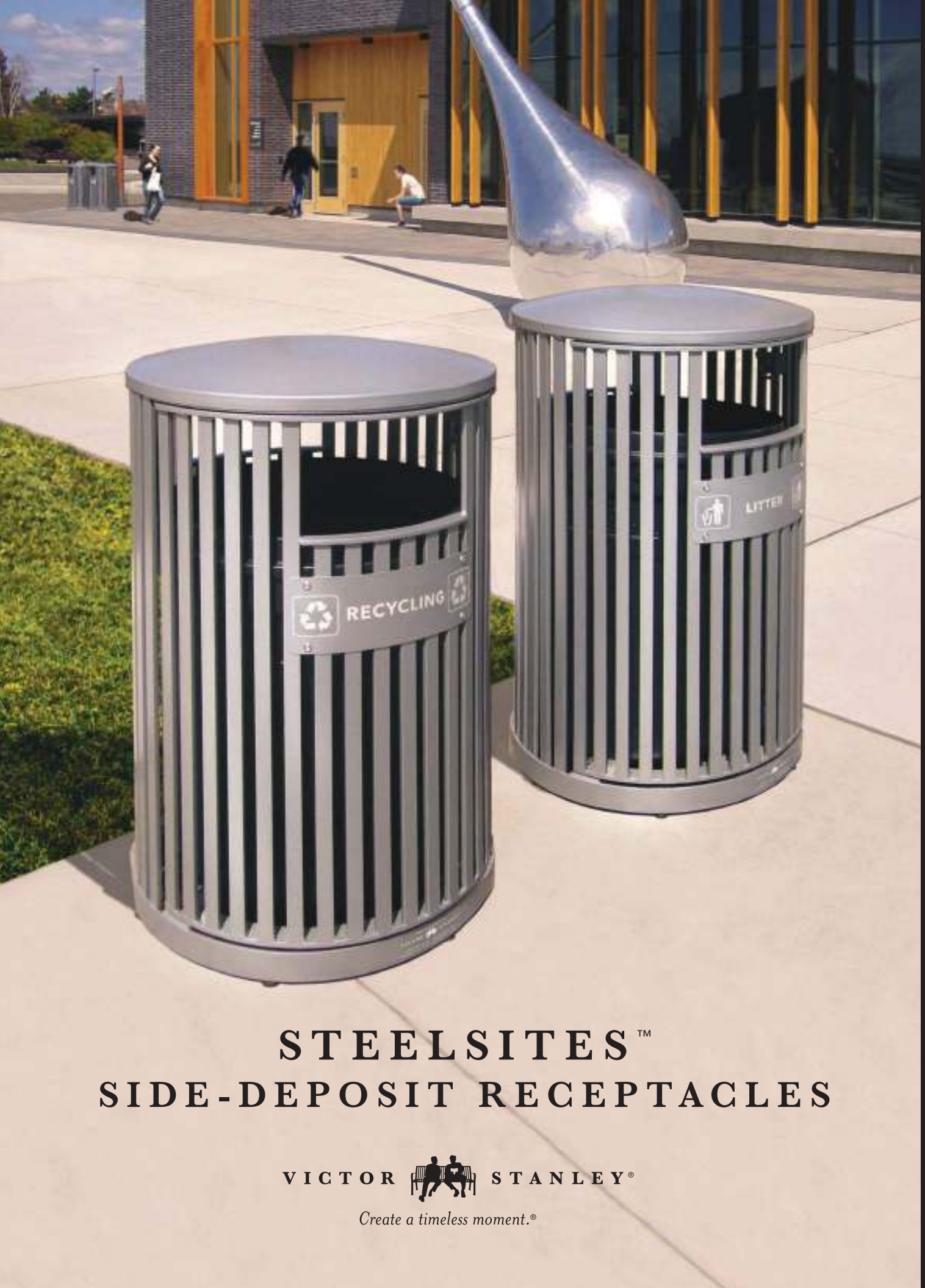

STEELSITES™
SIDE-DEPOSIT RECEPTACLES

VICTOR STANLEY®

Create a timeless moment.®

STEELSITES™ SIDE-DEPOSIT RECEPTACLES

These side-deposit receptacles feature side-door hinges that incorporate stainless-steel pins and oil-impregnated bronze bushings, eliminating friction and maximizing the lifespan of the product. The contemporary SDC and RSDC steel receptacle embraces an uncluttered, clean-lined design, exceptionally high recycled content, and features two unique side-deposits. It's just one more way Victor Stanley helps you create the perfect setting for timeless moments.

SDC SIDE-DEPOSIT RECEPTACLE

Model SDC-36: 36 gal (136 L) capacity.
Model SDC-24: 24 gal (90 L) capacity.
Standard solid convex lid. Heavy steel latch.

OPTIONS

Keyed lock (US Patent 6,339,944 B1). Ashtray (standard or covered). Half-Moon liners. Galvanized steel liner (powder coat available). Side-access plate with recycle holes for SDC-36. Raised band and decals. Custom decals and plaques.

Raised band and decals.

RSDC SIDE-DEPOSIT RECEPTACLE

Model RSDC-36: 36 gal (136 L) capacity.
Standard solid convex lid with divider. Customized steel panels to isolate different waste streams entering the receptacle, such as separating cans or plastic bottles from paper. Heavy steel latch. Half-Moon liners. Standard decal package. US Patents D671,289 S; D661,857 S.

OPTIONS

Keyed lock (US Patent 6,339,944 B1). Ashtray (standard or covered). Raised band and decals. Custom decals and plaques.

See product specifications for further details. Drawings are not to scale. Our TGIC powder-coating averages 8-10 mils (200-250 microns) thick and is applied in-house to ensure the highest level of quality. Offered in 12 standard and metallic colors, plus a full range of RAL colors with available color matching. Additional cost may apply.

Copyright 2014 Victor Stanley, Inc.® All rights reserved.

SIDE-DOOR HINGES

Composed of embedded precision stainless-steel pivot pins and oil-impregnated bronze bushings for reliable all-weather durability year after year.

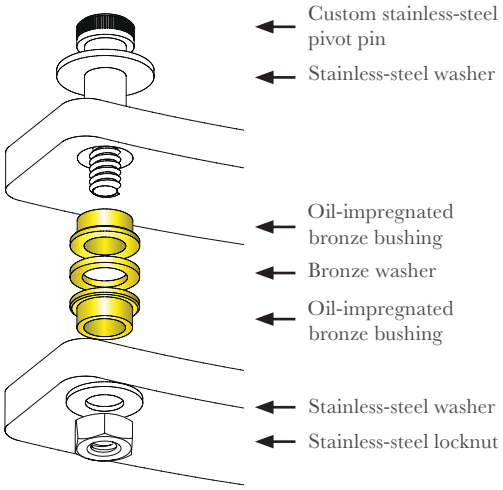

ASHTRAYS

Our large, heavy duty, stainless steel ashtrays are 2 in (51 mm) deep and are available in standard or covered.

Standard ashtray.

Covered ashtrays.

KEYED LOCK

Our keyed lock (US Patent 6,339,944 B1) is a unique design with a custom key to prevent tampering and residential trash.

Keyed lock.

HIGH-DENSITY PLASTIC LINERS

Our standard full and Half-Moon plastic receptacle liners (pair) are formed on custom molds designed for us. Reinforced, ribbed and molded for durability and ease of use. The primary raw material is recycled resin. Half-Moon liners make it easier and more cost effective than ever to separate different waste streams without sacrificing capacity or durability.

Standard liner.

Half-Moon liners.

SDC-36 with optional tri-keyed lock, optional raised band, custom side-plates and decals.

Victor Stanley, a leader in quality site furnishings, helps you bring your visions to life. From benches and litter receptacles to bike racks and planters, we meticulously design, engineer, and manufacture every detail to ensure our site furnishings will withstand the test of time. Founded over 50 years ago, we help create a place for people to gather, live life, and make timeless moments.

VICTOR STANLEY®

Create a timeless moment.®

P.O. Drawer 330, Dunkirk, MD 20754 1.800.368.2573 *(USA + Canada)* **TEL** 301.855.8300 **FAX** 410.257.7579 **VICTORSTANLEY.COM**

VICTOR STANLEY, INC.®
-Manufacturers of Quality Site Furnishings since 1962-

P.O. DRAWER 330 - DUNKIRK, MD 20754 USA
TOLL FREE: (800) 368-2573 (USA & CANADA)
TEL (301) 855-8300 - FAX (410) 257-7579
WEB SITE: HTTP://WWW.VICTORSTANLEY.COM

* ALL DIMENSIONS ARE IN INCHES *

DERIVED FROM NSDC-36 RECEPTACLE. NSDC-36 COVERED BY ONE OR MORE OF THE FOLLOWING PATENTS U.S. D445,982 S; D450,166 S: D476,454 S; D476,455 S

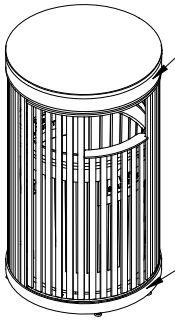

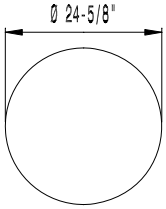

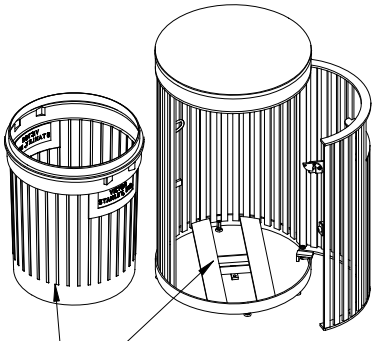

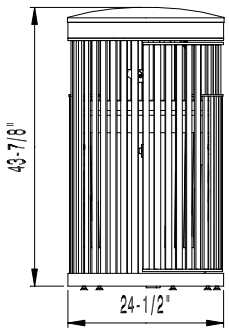

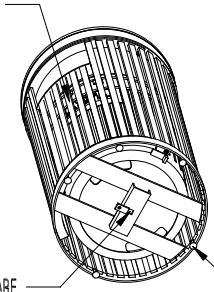

AVAILABLE OPTIONS:

POWDER COATING
10 STANDARD COLORS, 2 OPTIONAL METALLIC COLORS, CUSTOM COLORS (INCLUDING THE RAL RANGE)

CUSTOM PLAQUES & DECALS
AVAILABLE WITH STEEL PLAQUES IN VARIOUS SIZES AND PRESSURE SENSITIVE VINYL OUTDOOR DECALS.

LID
STANDARD WITH SOLID CONVEX LID, AVAILABLE WITH OPTIONAL SOLID CONVEX LID WITH RAISED BAND (AS SHOWN). AVAILABLE WITH OPTIONAL STAINLESS STEEL ASHTRAY. ASHTRAYS AVAILABLE WITH OPTIONAL ASHTRAY COVER.

SECURITY
SHOWN WITH STANDARD INTERIOR LATCH. AVAILABLE WITH OPTIONAL KEYED LOCK BOX OR TRI-KEYED LOCK BOX. LID BOLTED IN PLACE. AVAILABLE WITH OPTIONAL SIDE-ACCESS PLATE WITH RECYCLE HOLES, OPTIONAL MOUNT WITH 3 IN-LINE ANCHOR HOLES AND OPTIONAL BOTTOM PLATE COVER.

NOTES:

1. DRAWINGS NOT TO SCALE. DO NOT SCALE DRAWINGS.
2. ALL FABRICATED METAL COMPONENTS ARE STEEL SHOTBLASTED, ETCHED, PHOSPHATIZED, PREHEATED, AND ELECTROSTATICALLY POWDER-COATED WITH T.G.I.C. POLYESTER POWDER COATINGS. PRODUCTS ARE FULLY CLEANED AND PRETREATED, PREHEATED AND COATED WHILE HOT TO FILL CREVICES AND BUILD FILM COATING. COATED PARTS ARE THEN FULLY CURED TO COATING MANUFACTURER'S SPECIFICATIONS. THE THICKNESS OF THE RESULTING FINISH AVERAGES 8-10 MILS (200-250 MICRONS).
3. OIL IMPREGNATED BRONZE BUSHINGS AND STAINLESS STEEL PIVOT PINS FOR DOOR MOVEMENT, STANDARD 3/16" SOLID STEEL LATCH ASSEMBLY OR OPTIONAL PATENTED STAINLESS STEEL KEYED LOCK ASSEMBLY.
4. THIS VICTOR STANLEY, INC. PRODUCT MUST BE PERMANENTLY AFFIXED TO THE GROUND. CONSULT YOUR LOCAL CODES FOR REGULATIONS.
5. VICTOR STANLEY, INC., PLASTIC INNER LINERS ARE MOLDED ON TOOLING DESIGNED FOR AND OWNED BY VICTOR STANLEY, INC. THEY OFFER MAXIMUM CAPACITY AND STRENGTH WITH LIGHTWEIGHT CONSTRUCTION USING CRITICAL MOLDED RIBS, INTEGRAL HANDHOLDS, AND HIGH-STRENGTH MATERIALS. THIS MINIMIZES HANDLING DIFFICULTY AND FACILITATES EASY EMPTYING AND STORAGE WHILE AFFORDING LONG SERVICE LIFE.
6. ANCHOR BOLT NOT PROVIDED BY VICTOR STANLEY, INC.
7. FOR HIGH SALT ABUSIVE CLIMATES, HOT-DIP GALVANIZING BEFORE POWDER COATING IS AVAILABLE. HOT-DIP GALVANIZING IS PERFORMED FOR VICTOR STANLEY, INC. BY AN EXPERIENCED QUALIFIED FIRM TO WHICH PRODUCTS ARE SHIPPED FOR GALVANIZING. HOT-DIP GALVANIZING INCLUDES AN AGGRESSIVE PRE-TREATMENT AND IMMERSION IN A TANK OF CHARGED LIQUID ZINC AT OR AROUND 860°F (460°C). THE RESULTING SURFACE IS RESISTANT TO RUST BUT HAS SOME UNEVENNESS RESULTING FROM THE BONDING OF THE ZINC TO THE STEEL SURFACE. AS A RESULT, THE POWDER-COATING SURFACE FINISH OVER THAT GALVANIZED SURFACE MAY EXHIBIT BUMPS, UNEVENNESS, AND MAY NOT BE AS SMOOTH AS THE STANDARD FINISH; THIS UNEVEN AND INCONSISTENT FINISH IS NORMAL FOR GALVANIZING. CONTACT MANUFACTURER FOR DETAILS.
8. ALL SPECIFICATIONS ARE SUBJECT TO CHANGE. CONTACT MANUFACTURER FOR DETAILS.
9. THIS PRODUCT IS SHIPPED FULLY ASSEMBLED.

SDC-36

STEELSITES™ SERIES

36 GALLON SIDE-DOOR-OPENING LITTER RECEPTACLE WITH SIDE ACCESS
SHOWN: OPTIONAL SOLID CONVEX LID WITH RAISED BAND

COPYRIGHT 2014 VICTOR STANLEY, INC.® ALL RIGHTS RESERVED
REV. 8/20/14 DRAWN C.D.B. 2014-43

The Portland Loo | A Unique Solution to a Universal Problem

QUOTE

Date:
Invoice #:
Customer ID:
Expires:

To: **Name:**
City:
Address

Ship to: Zip Code 05401

Salesperson	Shipping Method	Shipping Terms	Delivery Date	Payment Terms
Evan Madden	Truck	FOB Burlington	90 Days ARO	see attached

Item #	QTY	Description	Unit Price	Line Total
1	1	Portland Loo- Single occupant public toilet. Basic unit carbon steel posts and 304 SS panels, louvers, door & roof. 40W heat trace, interior and exterior LED lighting with photoeye and motion sensor control and occupancy counter. **AC power** option. (LH/RH door swing and LH/RH hand wash basin to be determinded later) See attached drawings.	$90,000.00	$90,000.00
2	1	Portland Loo- Single occupant public toilet. Basic unit carbon steel posts and 304 SS panels, louvers, door & roof. 40W heat trace, interior and exterior LED lighting with photoeye and motion sensor control and occupancy counter. **Solar powered** only option with 3 panel solar, 2 batteries, and solar controller. (LH/RH door swing and LH/RH hand wash basin to be determinded later) See attached drawings.	$92,000.00	$92,000.00
3	1	Portland Loo- Single occupant public toilet. Basic unit carbon steel posts and 304 SS panels, louvers, door & roof. 40W heat trace, interior and exterior LED lighting with photoeye and motion sensor control and occupancy counter. **Hybrid power** option with 3 panel solar, solar controller and 2 battery back up. (LH/RH door swing and LH/RH handwash basin to be determinded later) See attached drawings.	$92,600.00	$92,600.00
4	1	Loo Template	incl	-
5	1	Foundation Mounting Hardware	incl	-
6	1	Shipping & Handling One Restroom	$6,600.00	$6,600.00
7	1	Cold Weather Toilet Upgrade	$4,500.00	$4,500.00
8	1	Baby Changing Table	$1,470.00	$1,470.00
9	1	Sharps Container	$500.00	$500.00
10	1	Trash Can	$100.00	$100.00
11	1	Hand Wash Basin	$1,500.00	$1,500.00
			Subtotal	
			Total	See Above

Make all checks payable to Madden Fabrication

Thank you for your business!

2550 NW 25th Pl. Portland, Oregon 97210 (503)226-3968

THE PORTLAND LOO

STRUCTURAL/ARCHITECTURAL DRAWINGS

SHEET INDEX

A0.0	COVER SHEET
A1.0	FLOOR PLAN
A2.0	EXTERIOR ELEVATIONS FRONT & RIGHT SIDE
A3.0	EXTERIOR ELEVATIONS BACK & LEFT SIDE
A4.0	ROOF LAYOUT
A5.0	INTERIOR SECTION VIEWS
A6.0	INTERIOR SECTION VIEW
S1.0	COLUMN AND BEAM LAYOUT
S2.0	FRONT DOOR
S3.0	FOUNDATION & ANCHOR BOLT LOCATIONS
S4.0	STANDARD OPTIONS
P1.0	PLUMBING FLOOR PLAN
P2.0	PLUMBING DETAIL
E1.0	ELECTRICAL SCHEMATIC

GENERAL NOTES

1. WEIGHT : 6,013 lbs
2. SQUARE FOOTAGE : 51.5
3. ALL STRUCTURAL STEEL TO BE FABRICATED AND ERECTED IN ACCORDANCE WITH AISC MANUAL 9th EDITION & A.W.S. ALL PANELS, LOUVERS, AND ROOF TO BE 304 STAINLESS STEEL,
4. STRUCTURAL TUBING ASTM 500 GR. B
5. ANCHOR BOLTS 1/2" X 5" TITENS
6. ALL WELDING TO BE DONE BY CERTIFIED WELDERS.
7. ALL EXPOSED BOLTS AND SCREWS TO BE TAMPER RESISTANT FOR HEX PIN BITS.
8. RIVET NUTS TO BE C.F.T. SERIES AND STAINLESS STEEL 302.
9. ALL MATERIALS TO BE SAND BLASTED AND POWDER COATED
10. ALL STRUCTURES TO BE FABRICATED OFF SITE SHALL BE DONE IN SHOPS OR FABRICATORS LICENSED OR APPROVED BY THE BUILDING AND ENGINEERING DIVISION OF THE CITY FOR WHICH IT IS INTENDED FOR

DESIGN INFORMATION

1. DESIGN IS BASED ON INTERNATIONAL BUILDING COLD IRC 2012 EDITION AND ASCE7–10
2. SNOW LOAD=25 PSF MAX
3. WIND DESIGN CRITERIA: 140 MPH (3–SECOND GUST) EXPOSURE C
4. SEISMIC DESIGN CRITERIA: SDS=1.0 MAXIMUM, R–6.5 (LIGHT FRAME SHEAR WALL), IMPORTANCE FACTOR=1
5. SEISMIC DESIGN CATEGORY: D
6. SITE CLASS D
7. CONTRACTOR TO VERIFY DESIGN PARAMETERS SHOWN WITH ACTUAL SITE CONDITIONS AND INSURE ACTUAL SITE PARAMETERS NOT EXCEED DESIGN

SPECIAL INSPECTIONS

1. AN INDEPENDENT TESTING COMPANY OR SPECIAL INSPECTOR RETAINED BY THE OWNER AND APPROVED BY THE BUILDING OFFICIAL SHALL INSPECT THE FOLLOWING.
   - A. FOUNDATION REINFORCING STEEL PLACEMENT
   - B. VERIFY USE OF REQUIRED CONCRETE MIX DESIGN
   - C. CONCRETE PLACEMENT
   - D. ANCHOR BOLTS–TITENS (INSTALLED AFTER CONCRETE HAS HARDENED)

REV	DATE	DESCRIPTION	DRN	APP'D

MADDEN FABRICATION
2550 NW 25th Place • Portland, OR. •97210
Phone: (503) 226-3968 Fax: (503) 242-2446

PORTLAND LOO

COVER SHEET

NAME	DATE	SERIAL NO.	DRW. NO.
LEO	4/16/2015		A0.0

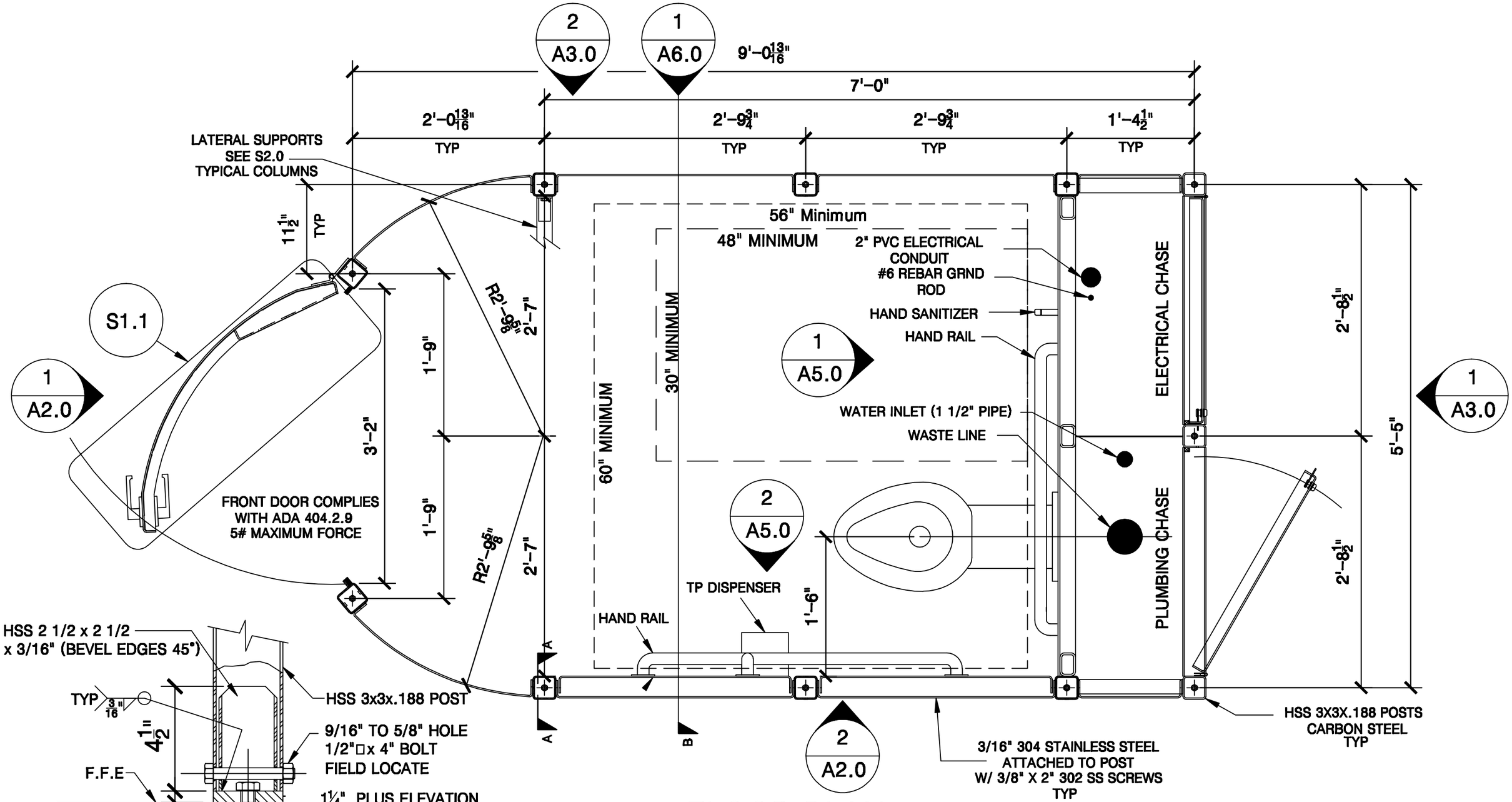

FLOOR PLAN

SCALE: 1" = 1'-0"

SECTION A-A

Typ anchoring system
(11) REQ'D

REV	DATE	DESCRIPTION	DRN	APP'D

MADDEN FABRICATION
2550 NW 25th Place • Portland, OR. •97210
Phone: (503) 226-3968 Fax (503) 242-2446

PORTLAND LOO

FLOOR PLAN

NAME	DATE	SERIAL NO.	DRW. NO.
LEO	4/16/2015		A1.0

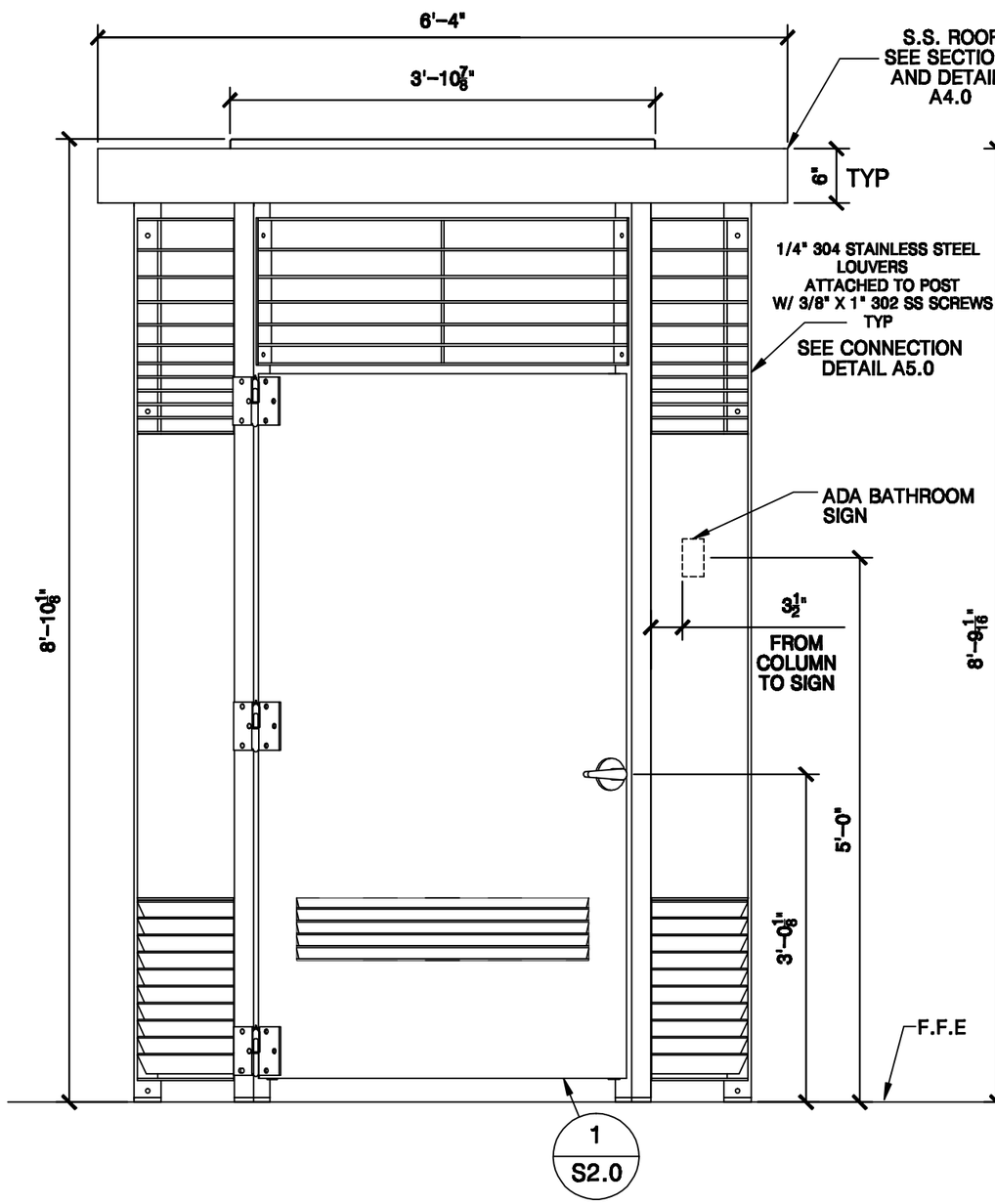

1 A2.0 FRONT ELEVATION VIEW

SCALE: 3/4" = 1'-0"

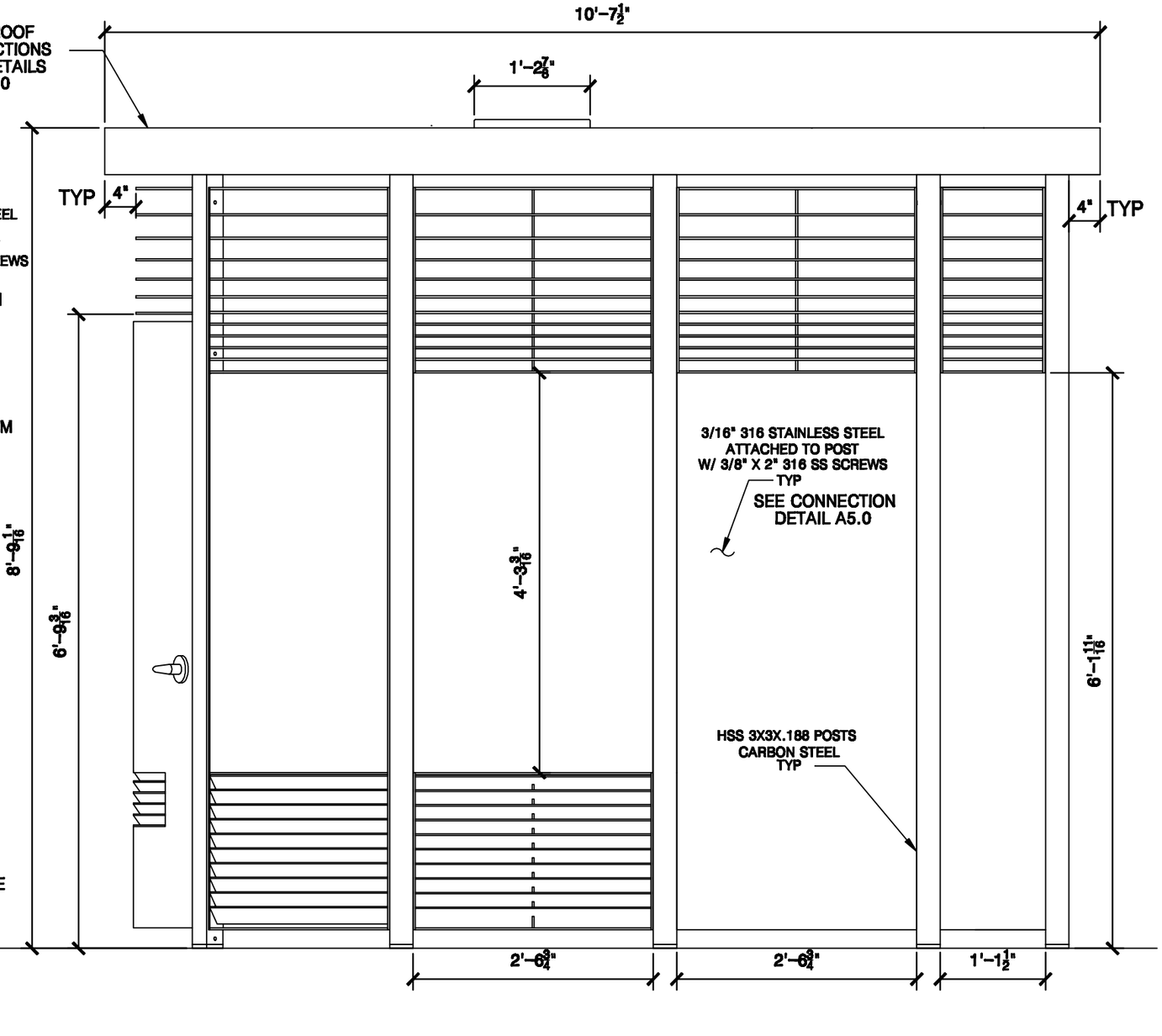

2 A2.0 RIGHT ELEVATION VIEW

SCALE: 3/4" = 1'-0"

REV	DATE	DESCRIPTION	DRN	APP'D

MADDEN FABRICATION

2550 NW 25th Place • Portland, OR. •97210
Phone: (503) 226-3968 Fax: (503) 242-2446

PORTLAND LOO

EXTERIOR ELEVATIONS FRONT AND RIGHT SIDE

NAME	DATE	SERIAL NO.	DRW. NO.
LEO	4/16/2015		A2.0

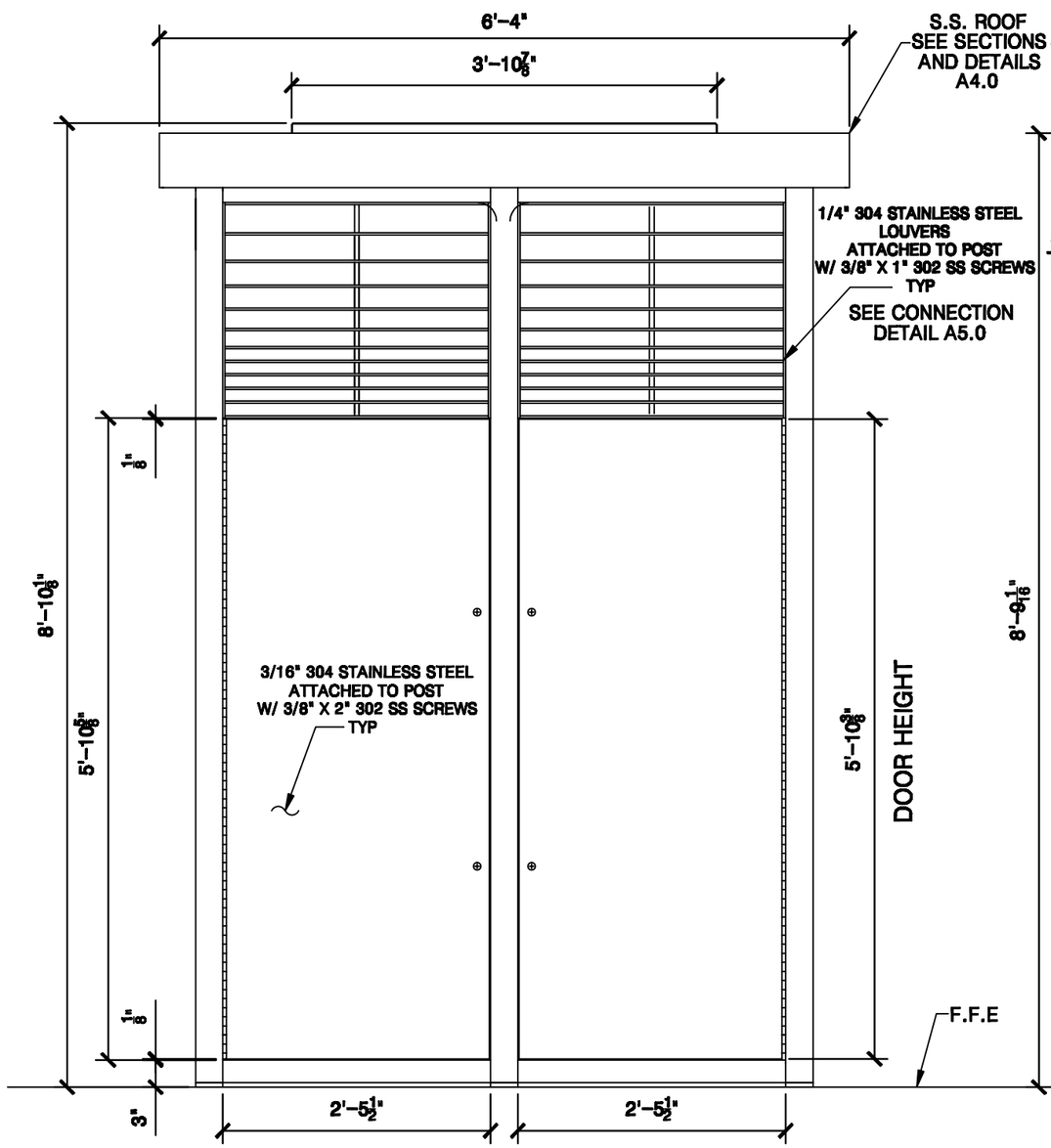

1 A3.0 BACK ELEVATION VIEW

SCALE: 3/4" = 1'-0"

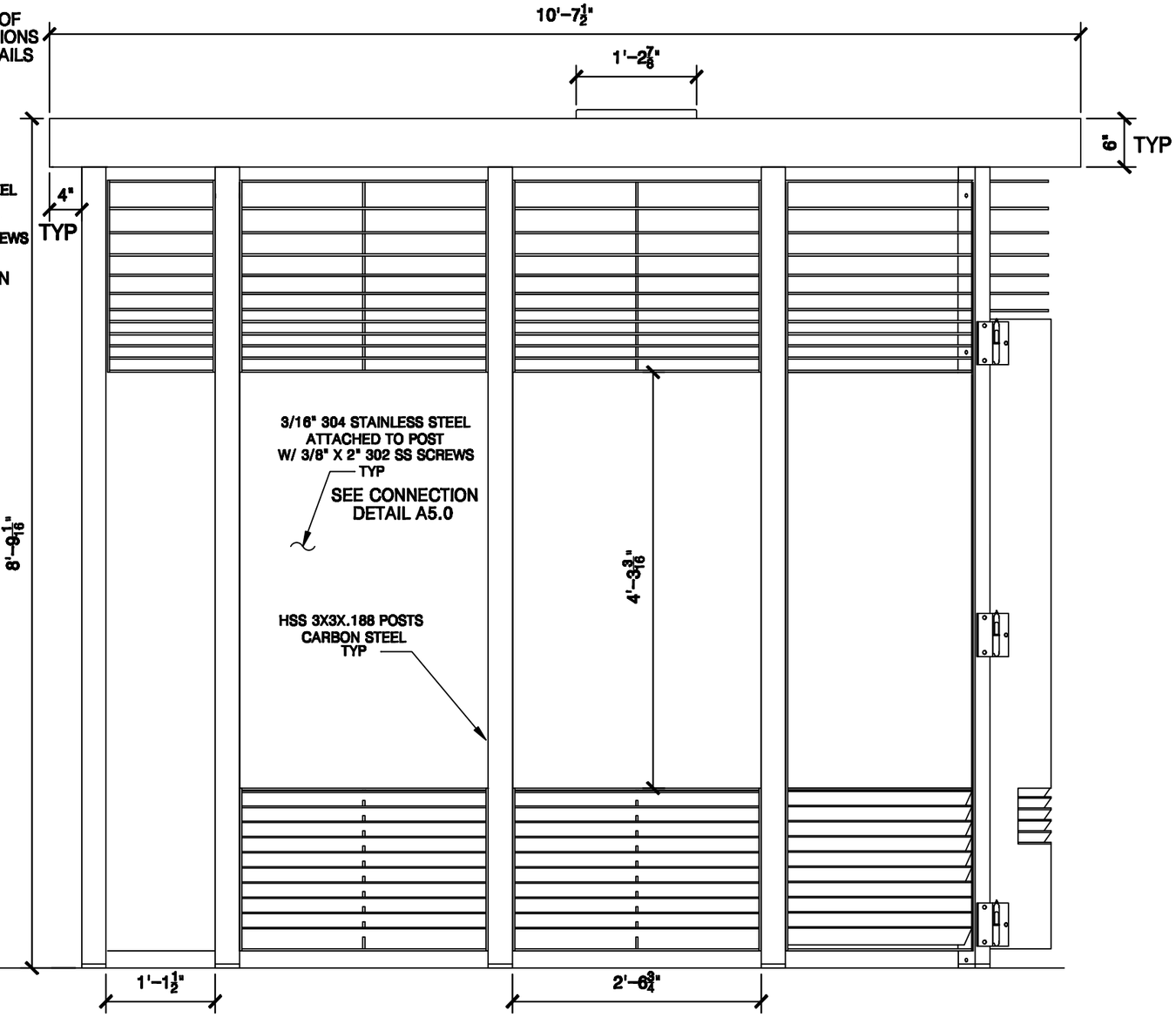

2 A3.0 LEFT ELEVATION VIEW

SCALE: 3/4" = 1'-0"

REV	DATE	DESCRIPTION	DRN	APP'D

MADDEN FABRICATION

2550 NW 25th Place • Portland, OR. •97210
Phone: (503) 226-3968 Fax (503) 242-2446

PORTLAND LOO

EXTERIOR ELEVATIONS BACK AND LEFT SIDE

NAME	DATE	SERIAL NO.	DRW. NO.
LEO	4/16/2015		A3.0

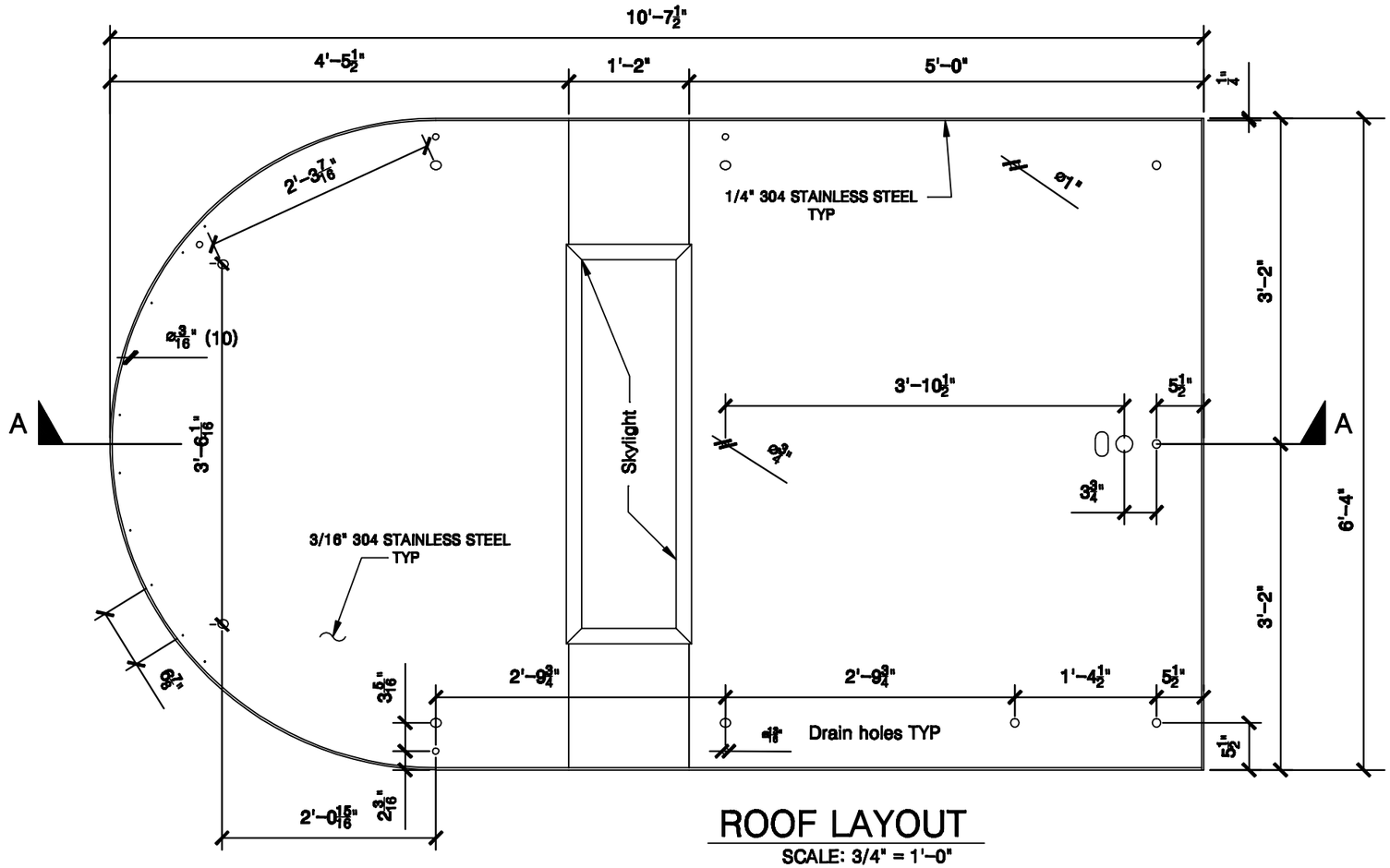

ROOF LAYOUT

SCALE: 3/4" = 1'-0"

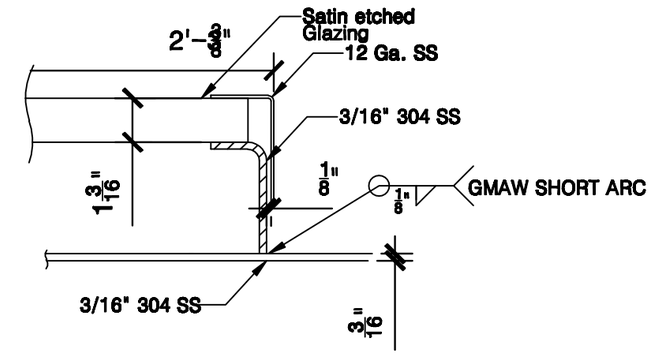

DETAIL 1

SCALE: 3" = 1'-0"

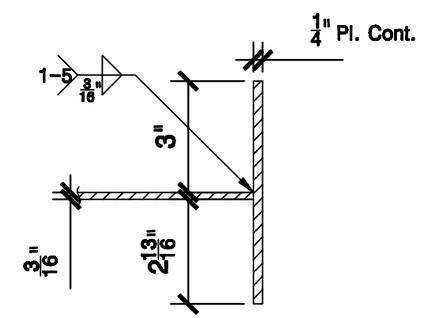

DETAIL 2

SCALE: 3" = 1'-0"

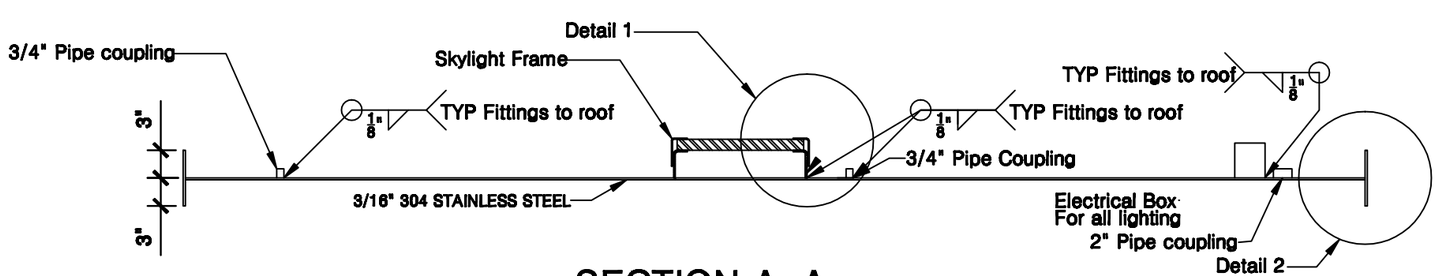

SECTION A-A

SCALE: 3/4" = 1'-0"

REV	DATE	DESCRIPTION	DRN	APP'D

MADDEN FABRICATION
2550 NW 25th Place • Portland, OR. •97210
Phone: (503) 226-3968 Fax (503) 242-2446

PORTLAND LOO

ROOF LAYOUT

NAME	DATE	SERIAL NO.	DRW. NO.
LEO	4/16/2015		A4.0

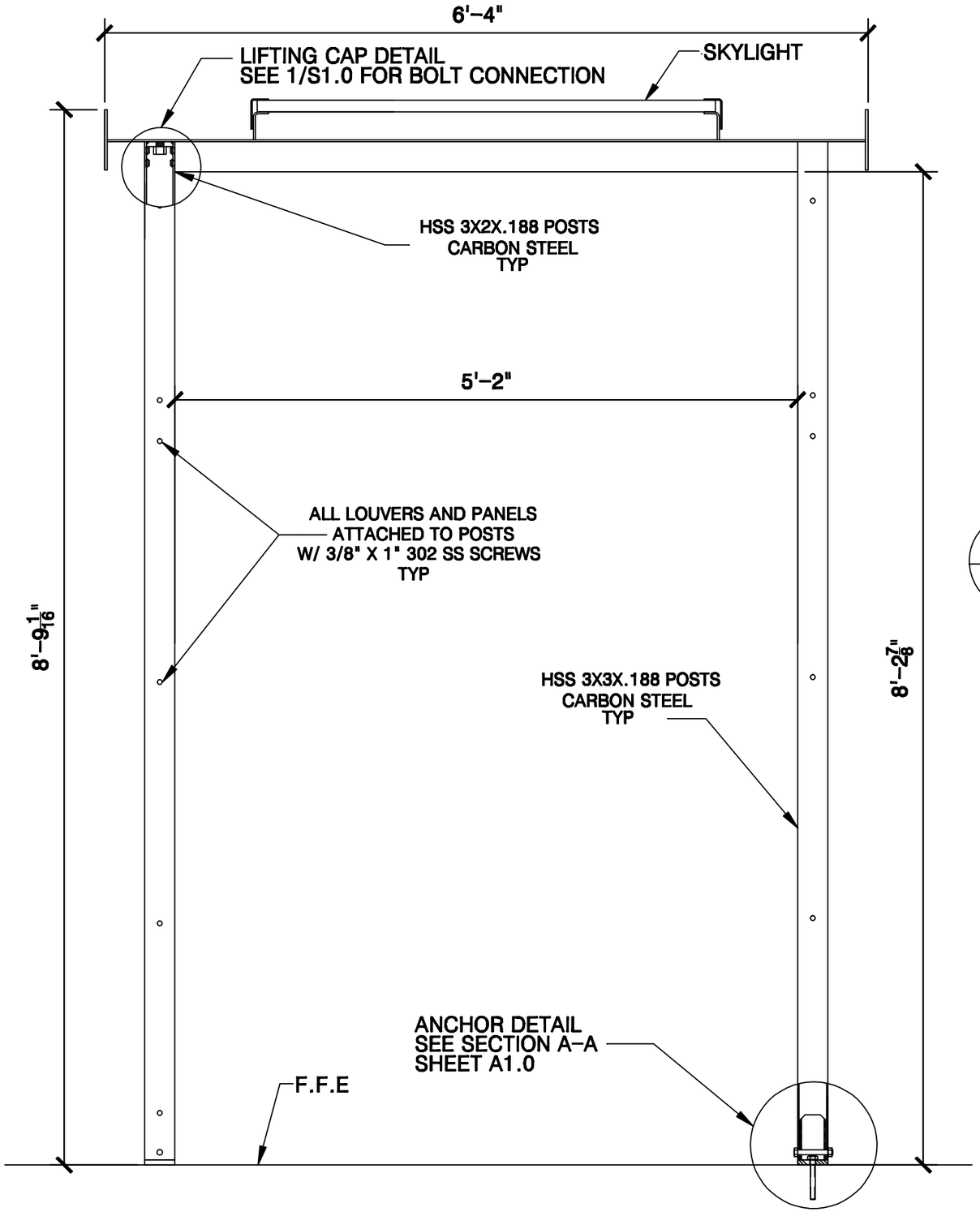

B-B
A1.0

INTERIOR ELEVATION VIEW

SCALE: 3/4" = 1'-0"

REV	DATE	DESCRIPTION	DRN	APP'D

MADDEN FABRICATION

2550 NW 25th Place • Portland, OR. •97210
Phone: (503) 226-3968 Fax: (503) 242-2446

PORTLAND LOO

INTERNAL SECTION VIEW

NAME	DATE	SERIAL NO.	DRW. NO.
LEO	4/16/2015		A5.0

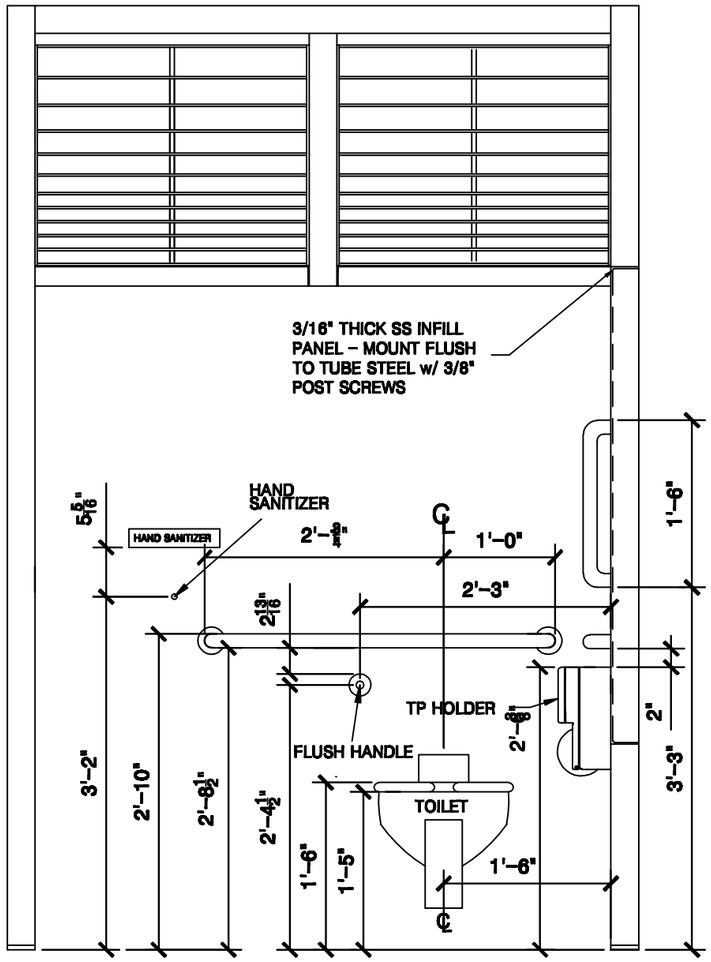

1 A5.0 WATER CLOSET RAILING

1 1/2"□x.120" wall ss
Plate 3/16" ss
(1) Assm REQ'D

SCALE: 3/4" = 1'–0"

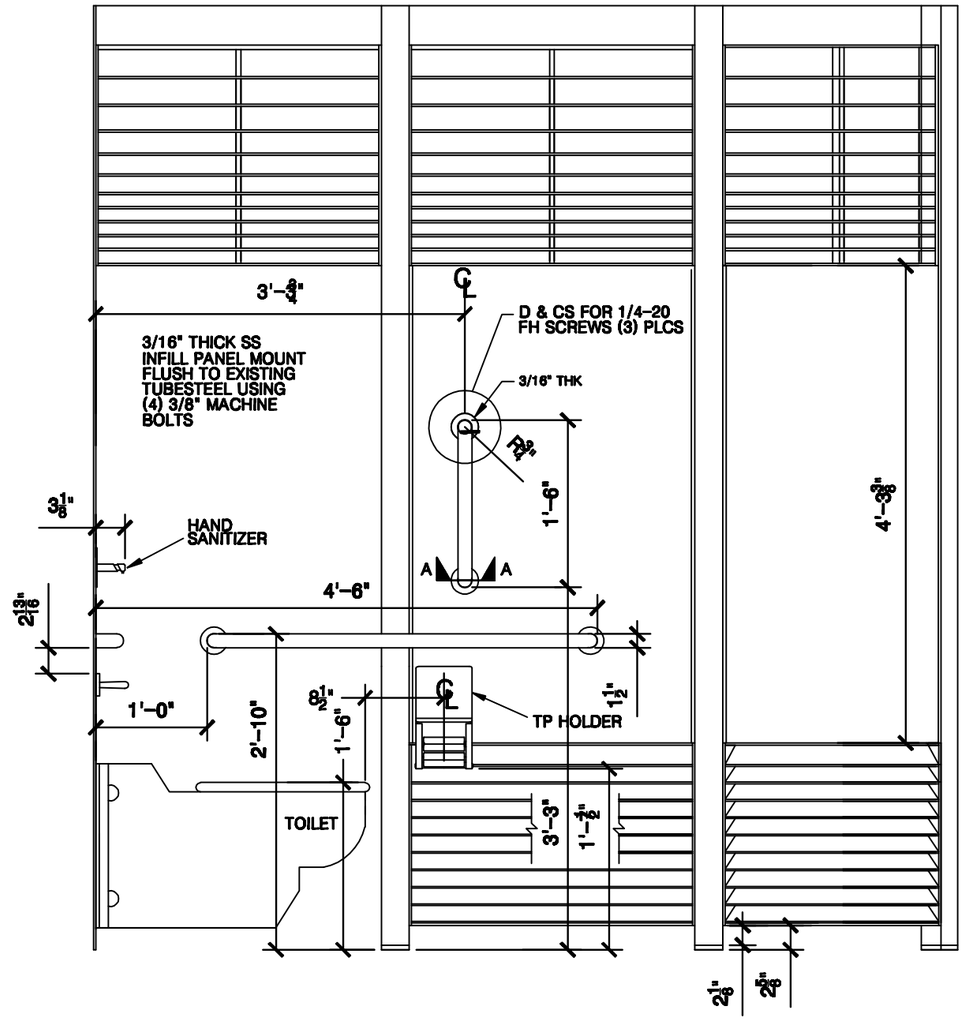

2 A5.0 WATER CLOSET RAILING

1 1/2"□x.120" wall ss
Plate 3/16" ss
(1) Assm REQ'D

SCALE: 3/4" = 1'–0"

ALL GRAB BARS COMPLY WITH ADA 609.8 TO WITHSTAND FORCE OF 250#

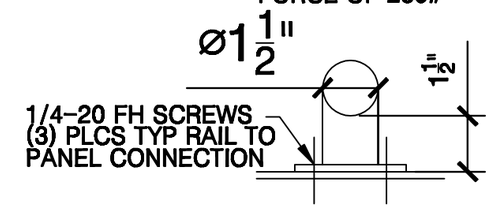

SECTION A–A

Typ anchoring system
(11) REQ'D

SCALE: 3" = 1'–0"

REV	DATE	DESCRIPTION	DRN	APP'D

MADDEN FABRICATION
2550 NW 25th Place • Portland, OR. •97210
Phone: (503) 226-3968 Fax (503) 242-2446

PORTLAND LOO

INTERNAL SECTION VIEWS

NAME	DATE	SERIAL NO.	DRW. NO.
LEO	4/16/2015		A6.0

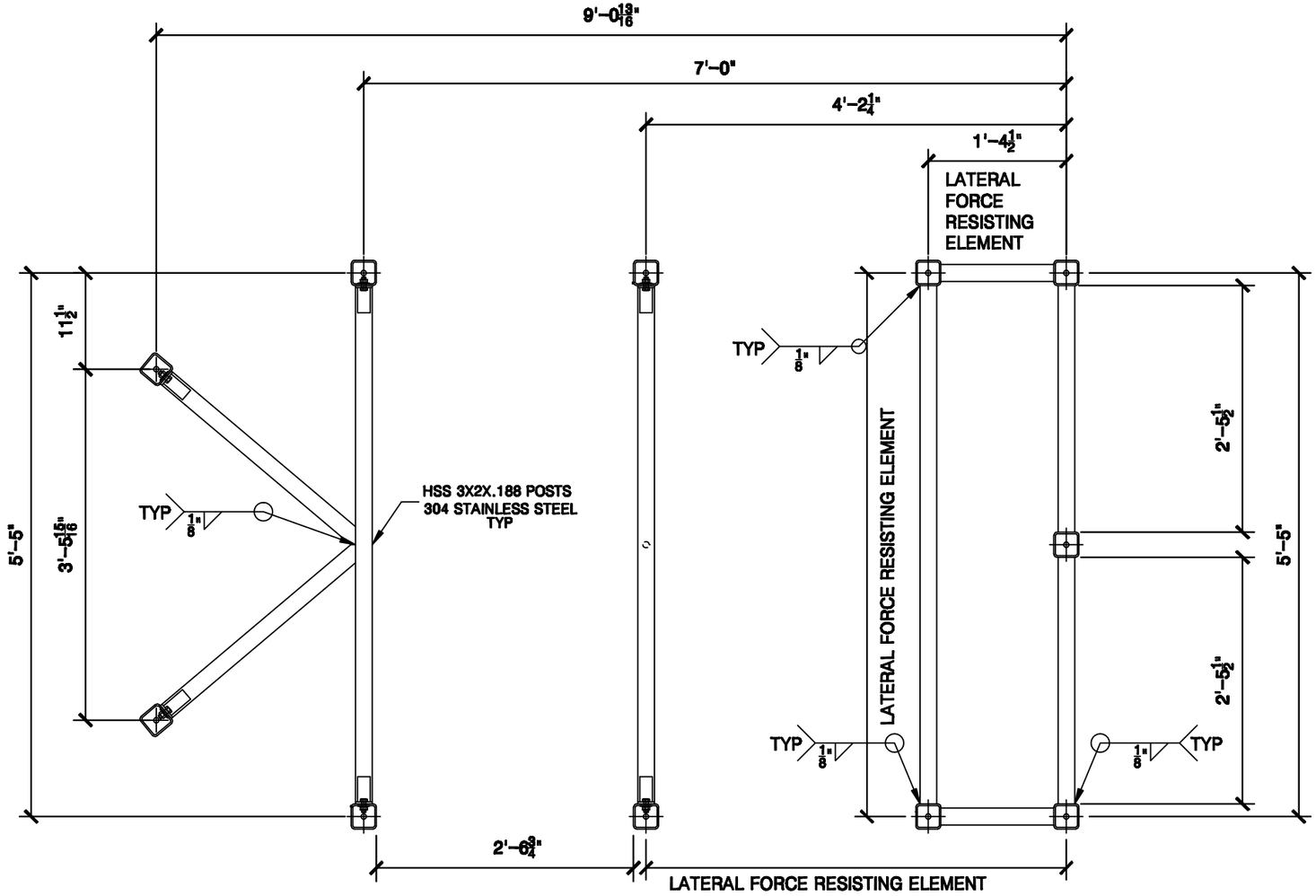

COLUMN AND BEAM LAYOUT

SCALE: 3/4" = 1'-0"

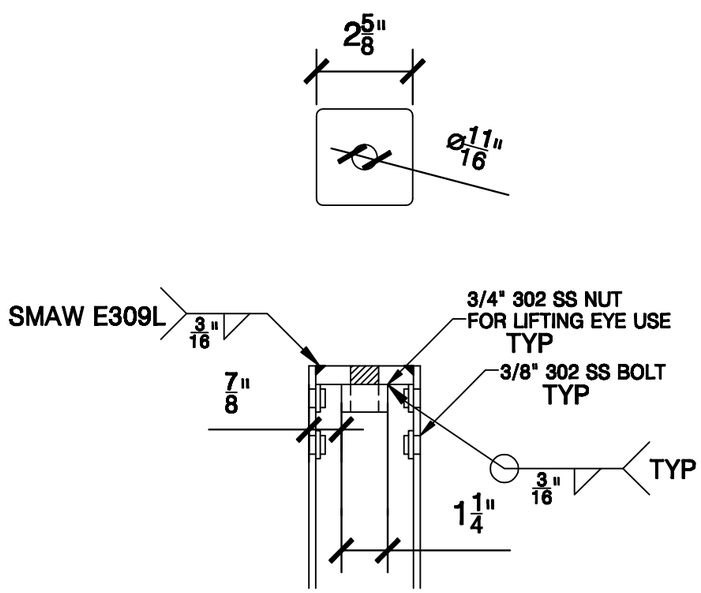

1 / S1.0

COLUMN LIFTING CAP

1/2" 304 SS
TAP FOR 3/4-10 Bolt
(11) REQ'D

SCALE: 3" = 1'-0"

REV	DATE	DESCRIPTION	DRN	APP'D

MADDEN FABRICATION
2550 NW 25th Place • Portland, OR. •97210
Phone: (503) 226-3968 Fax (503) 242-2446

PORTLAND LOO

COLUMN AND BEAM LAYOUT

NAME	DATE	SERIAL NO.	DRW. NO.
LEO	4/16/2015		S1.0

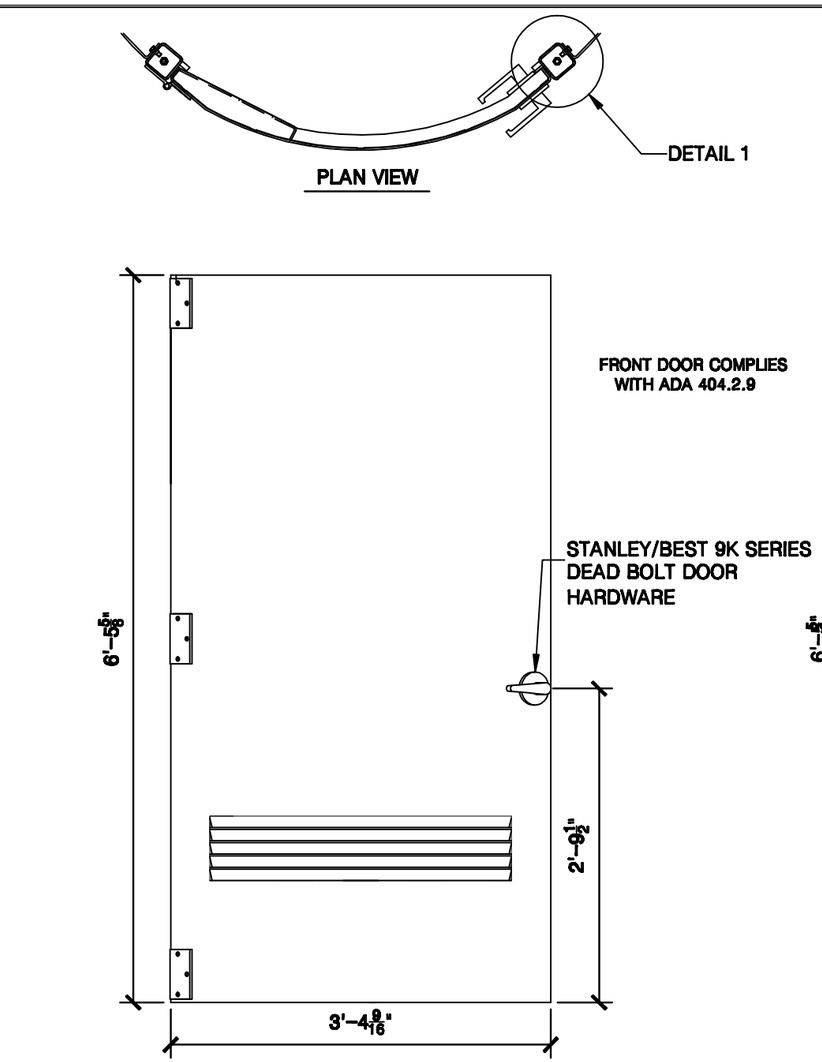

1 RIGHT HAND ENTRY DOOR (STANDARD)
PL 3/16" 304 STAINLESS STEEL
(1) REQ'D
SCALE: 3/4" = 1'-0"

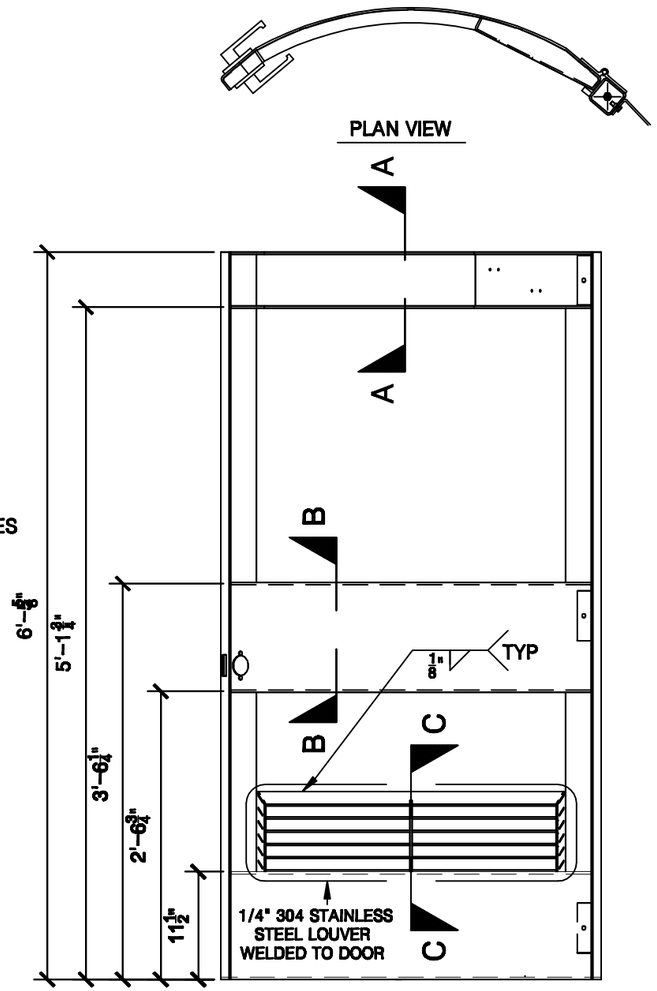

BACKSIDE

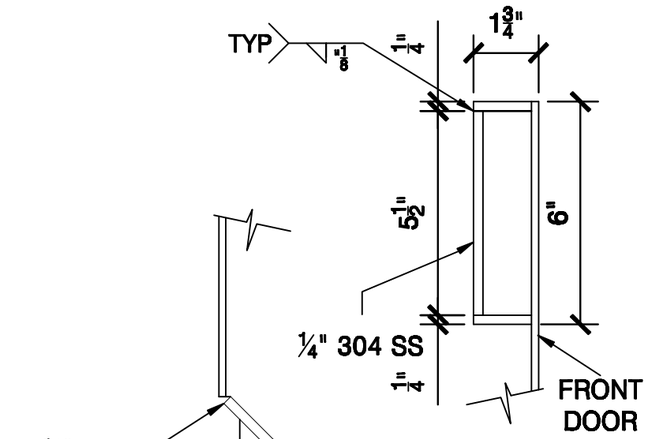

SECTION A–A
SCALE: 3" = 1'-0"

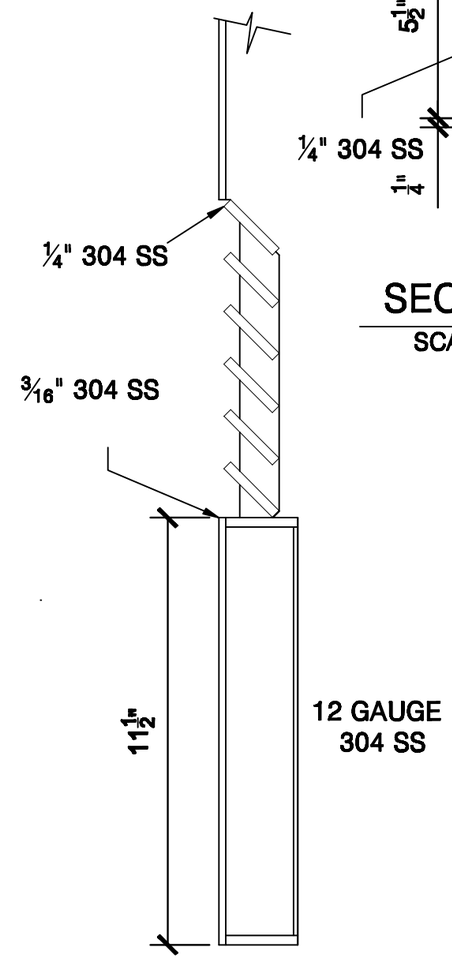

SECTION C–C
SCALE: 3" = 1'-0"

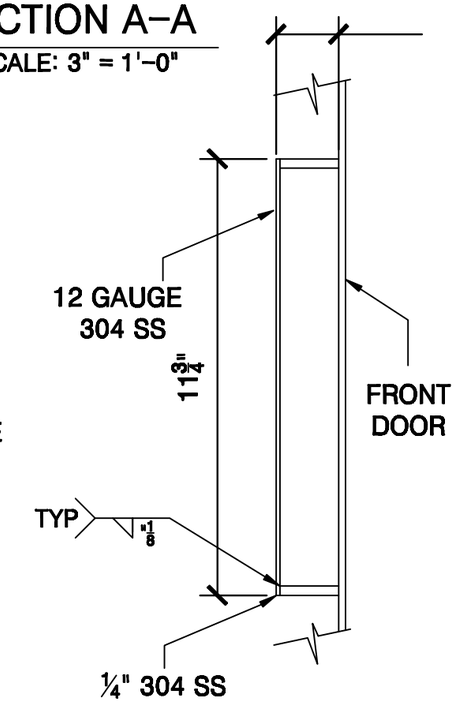

SECTION B–B
SCALE: 3" = 1'-0"

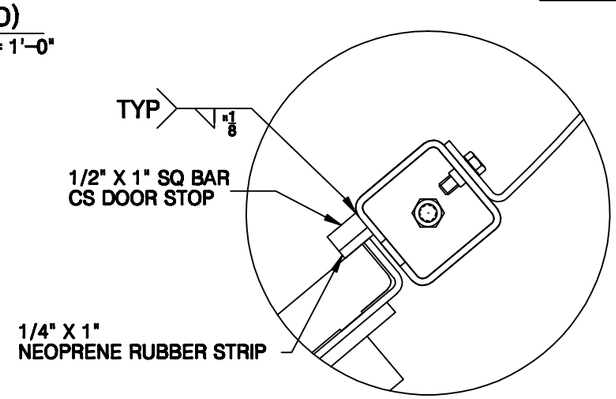

DETAIL 1
SCALE: 3" = 1'-0"

REV	DATE	DESCRIPTION	DRN	APP'D

MADDEN FABRICATION
2550 NW 25th Place • Portland, OR. •97210
Phone: (503) 226-3968 Fax (503) 242-2446

PORTLAND LOO
FRONT DOOR

NAME	DATE	SERIAL NO.	DRW. NO.
LEO	4/16/2015		S2.0

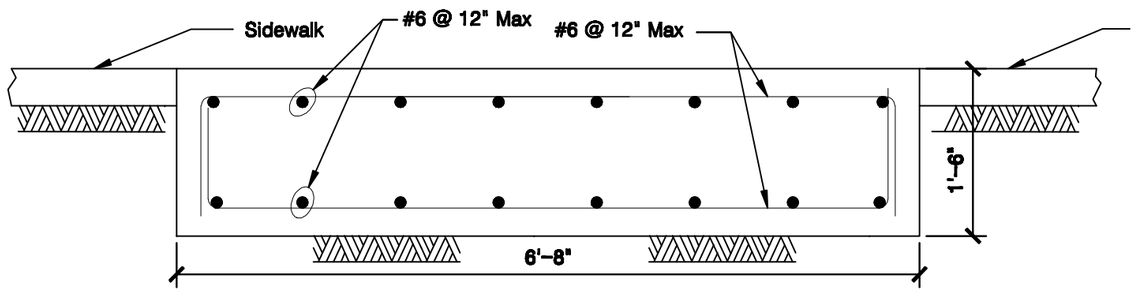

SECTION A–A
SCALE: 3/4" = 1'-0"

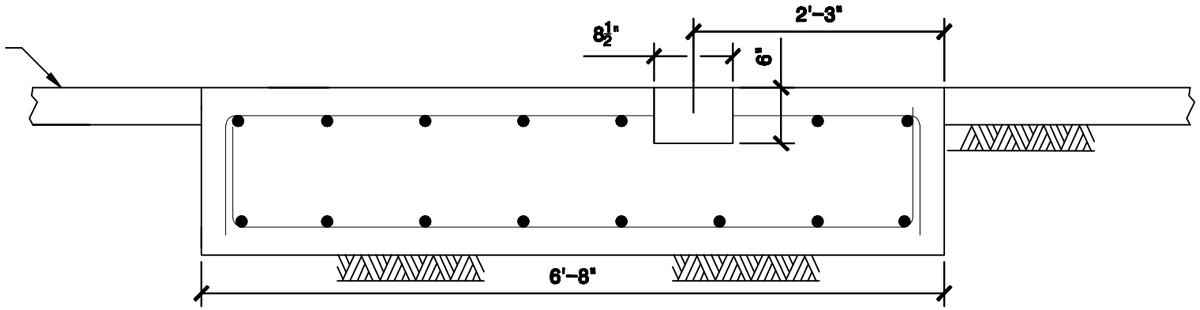

SECTION B–B
SCALE: 3/4" = 1'-0"

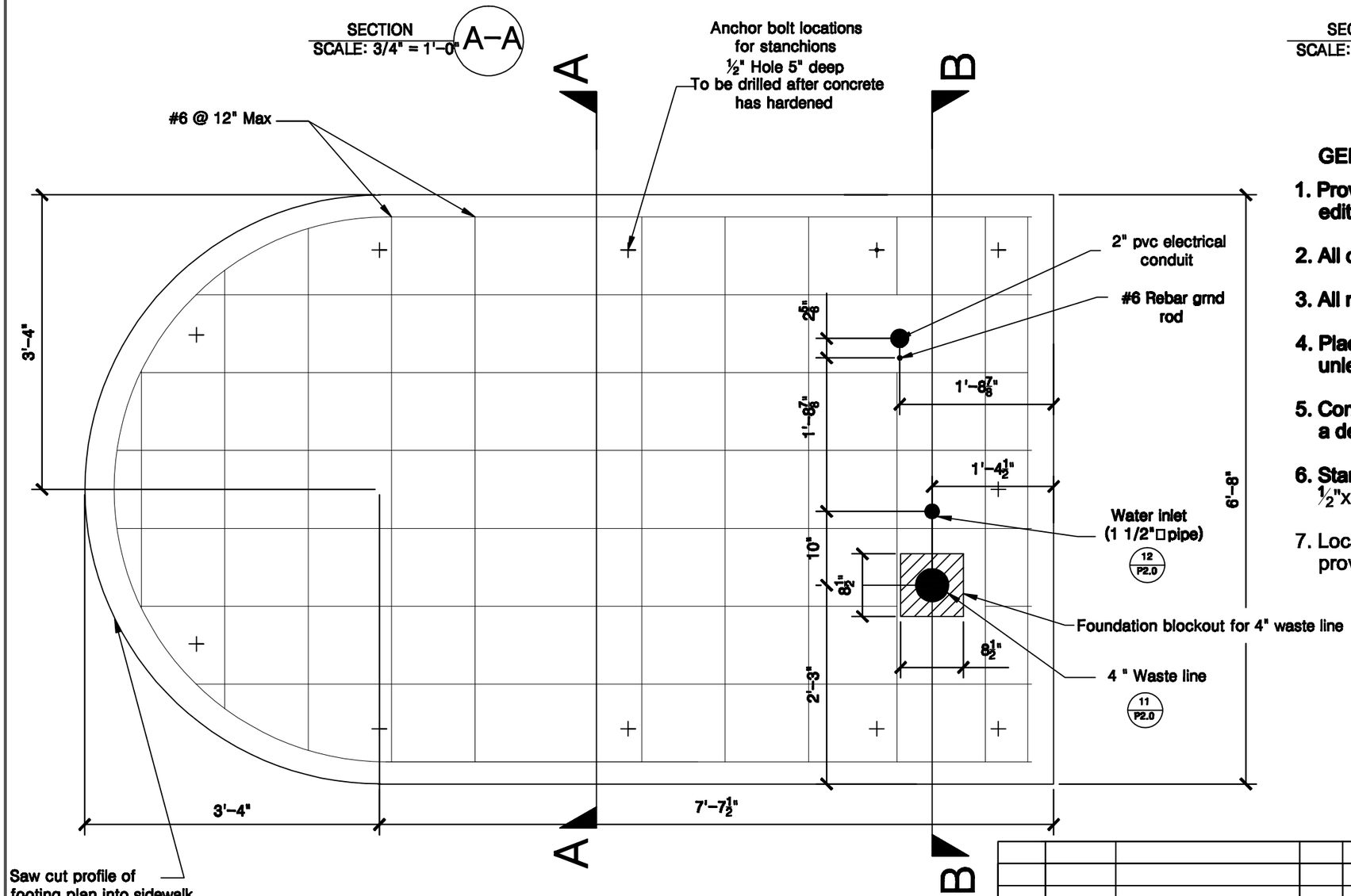

FOUNDATION & ANCHOR BOLT LOCATIONS

Standard hand wash drain location

SCALE: 3/4" = 1'-0"

GENERAL NOTES:

1. **Provide all materials and perform all work according to the current edition of the Specifications of the Authority Having Jurisdiction.**
2. **All concrete shall be Structural Class 4000.**
3. **All reinforcing steel shall conform to ASTM A706 or A615 Grade 60.**
4. **Place bars 3 inches clear of the nearest face of concrete unless shown otherwise.**
5. **Concrete footing may be poured integrally with 4' sidewalk, providing a deep cut tool joint is located around perimeter of footing.**
6. **Stanchions section "A-A" / A1.0 to be fastened to the concrete using** ½"x5" titens. The Loos columns to be fastened the the stanchions.
7. Location of anchor bolts to be located and drilled using template provided before installation by Madden Fabrication.

REV	DATE	DESCRIPTION	DRN	APP'D

MADDEN FABRICATION
2550 NW 25th Place • Portland, OR. •97210
Phone: (503) 226-3968 Fax: (503) 242-2446

PORTLAND LOO

FOUNDATION & ANCHOR BOLT LOCATION

NAME	DATE	SERIAL NO.	DRW. NO.
LEO	4/16/2015		S3.0

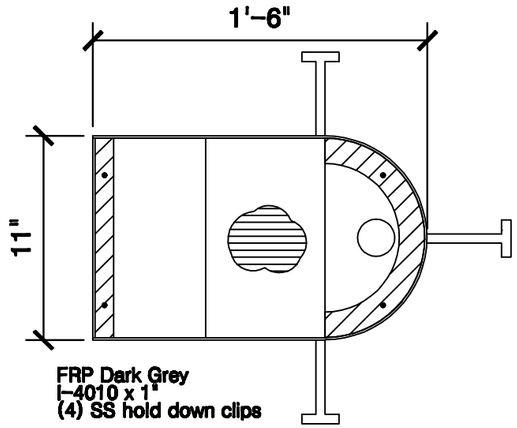

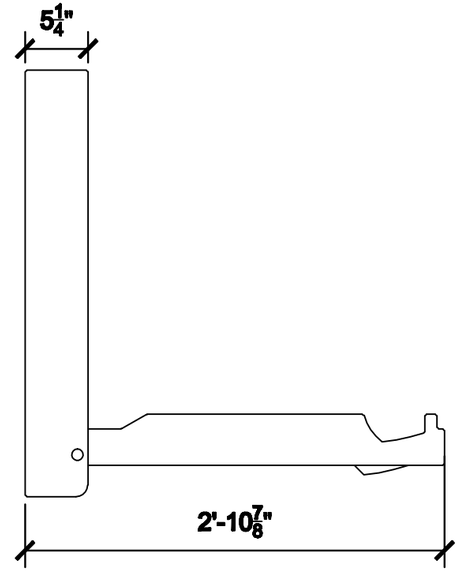

6 BABY CHANGING TABLE
KOALA KB101-05
(1) REQ'D

PLAN VIEW

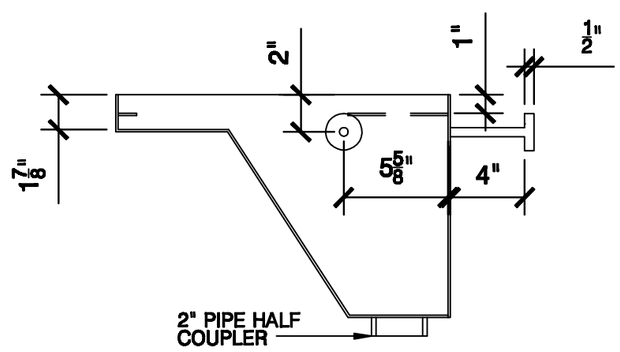

5 WASH BASIN
Sheet 12 GA SS
(1) Assembly REQ'D

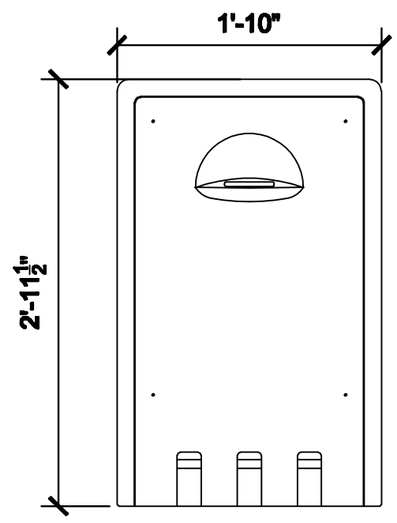

NOTE: TO BE MOUNTED
ON INTERIOR INFILL
PANEL

REV	DATE	DESCRIPTION	DRN	APP'D

MADDEN FABRICATION
2550 NW 25th Place • Portland, OR. •97210
Phone: (503) 226-3968 Fax (503) 242-2446

PORTLAND LOO
STANDARD OPTIONS

NAME	DATE	SERIAL NO.	DRW. NO.
LEO	4/16/2015		S4.0

BILL OF MATERIAL

ITEM	QTY	DESCRIPTION	MFG.
1	ONE	2" VENT PIPE TUBE TO ROOF	VARIOUS
2	ONE	WASTE PIPING 4" SDR 35 PVC SEWER LINE TO P.O.C.	VARIOUS
3	ONE	ROUTE CW SUPPLY TO FLOOR DRAIN P–TRAP FROM TRAP PRIMING LOCATED IN PLUMBING CHASE	JAY R. SMITH
4	ONE	4" GRADE CLEAN–OUT IN YARD BOX	VARIOUS
5	ONE	WATER INLET 1–1/2" C.W. SUPPLY SHOWN ON SHEET 7	VARIOUS
6	ONE	1–1/2" C.W. SUPPLY TO SOV SHOWN ON SHEET 7	VARIOUS
7	ONE	4" SEWER LINE CARRIER SHOW ON P2.0	VARIOUS
8	ONE	TRAP PRIMER VALVE	PRIME–RIGHT

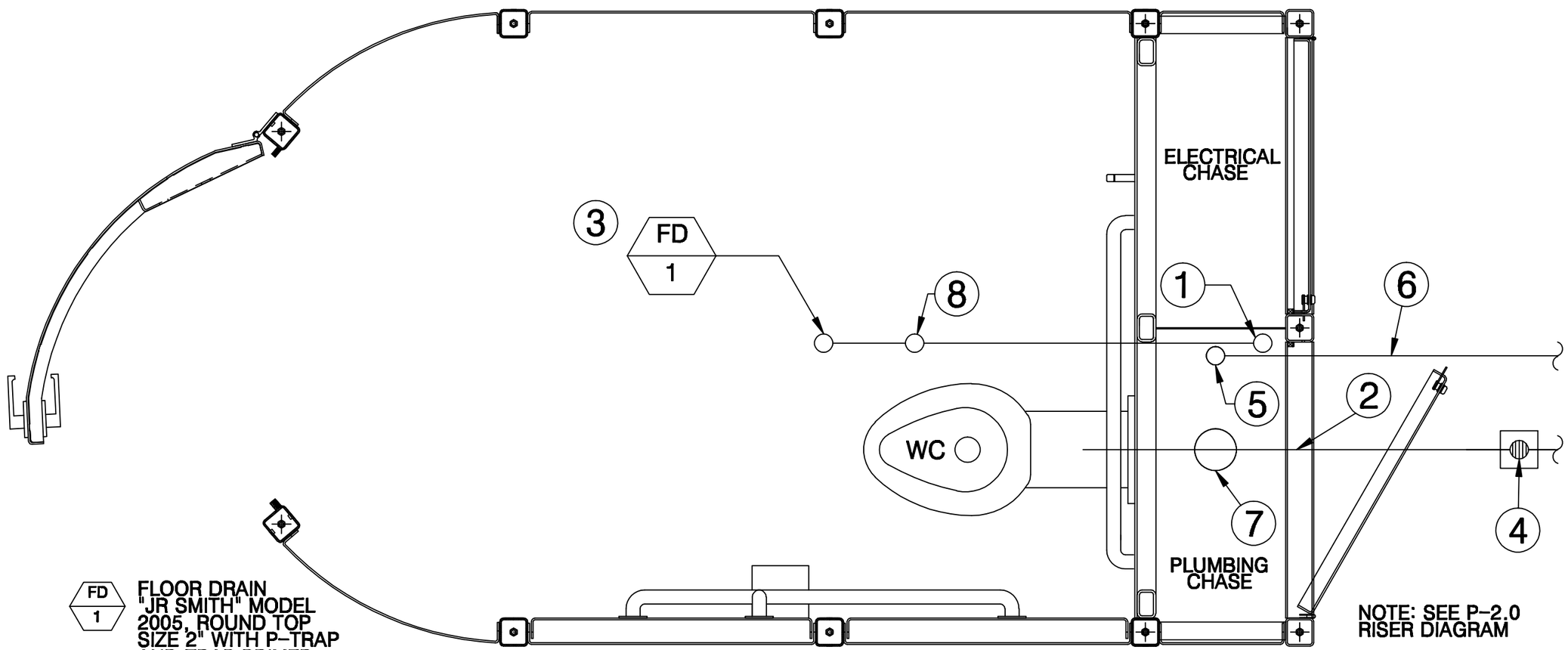

FD 1 — FLOOR DRAIN "JR SMITH" MODEL 2005, ROUND TOP SIZE 2" WITH P–TRAP AND TRAP PRIMER FITTING

NOTE: SEE P–2.0 RISER DIAGRAM

PLUMBING FLOOR PLAN

SCALE: 1" = 1'–0"

REV	DATE	DESCRIPTION	DRN	APP'D

MADDEN FABRICATION
2550 NW 25th Place • Portland, OR. •97210
Phone: (503) 226-3968 Fax: (503) 242-2446

PORTLAND LOO

PLUMBING FLOOR PLAN

NAME	DATE	SERIAL NO.	DRW. NO.
LEO	4/16/2015		P1.0

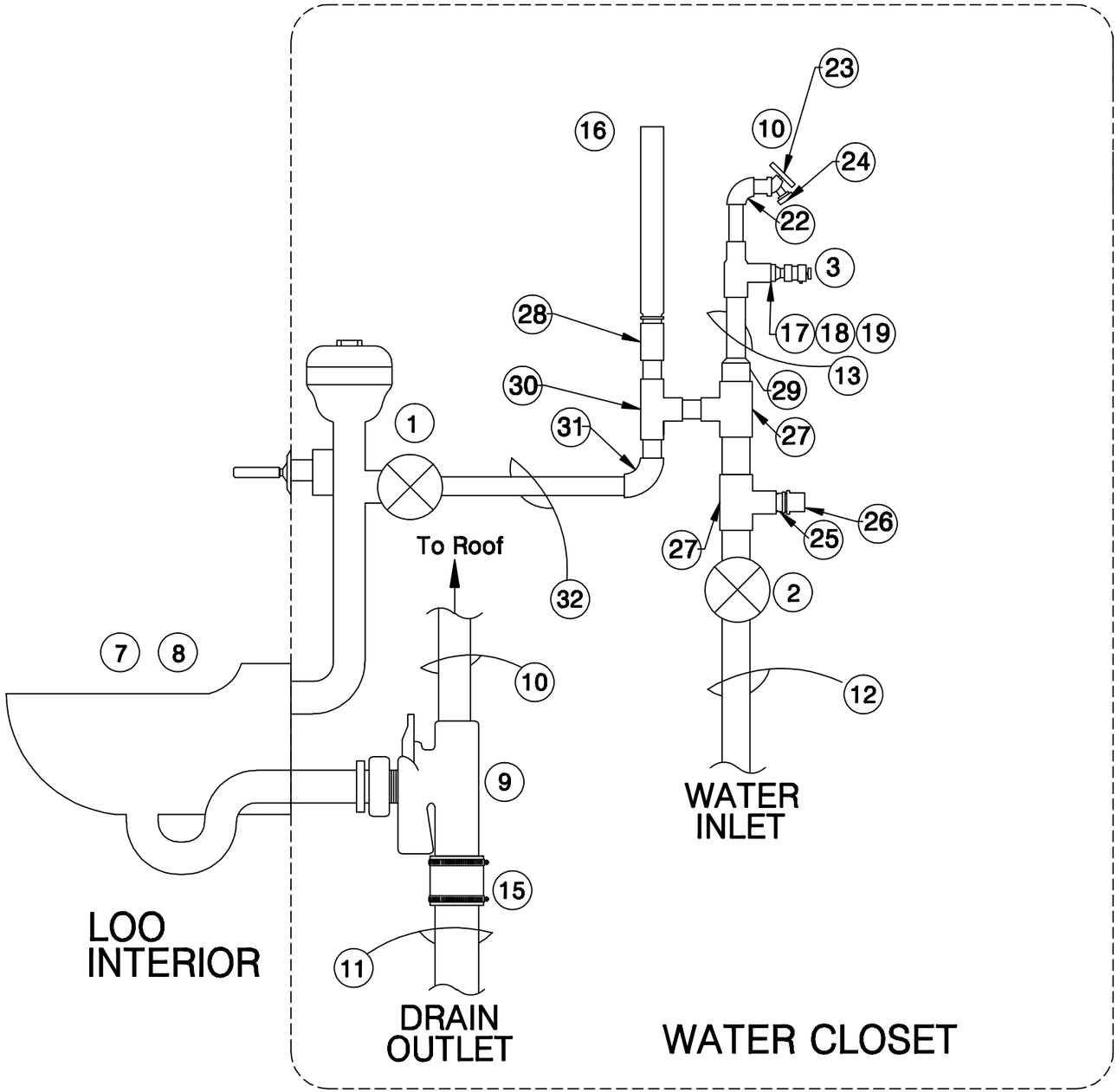

BILL OF MATERIAL

ITEM	QTY	DESCRIPTION	MFG.
1	ONE	140–1.28 w/ MBFW FLOW UNIT	SLOAN
2	ONE	1 1/2" MAIN SHUT OFF VALVE	VARIOUS
3	ONE	1" – 1/4 TURN SHUT OFF VALVE	VARIOUS
7	ONE	2105–W–1–CN DURA–WARE TOILET	ACORN
8	ONE	DURABLE PLASTIC TOILET SEAT	ACORN
9	ONE	440 Y CARRIER	JAY R. SMITH
10	ONE	2–1/2" SS Sch 40 PIPE	VARIOUS
11	ONE	4" SEWER DRAIN	OTHERS
12	ONE	1–1/2" CU SUPPLY	OTHERS
13	ONE	3/4" IPS CU PIPE	VARIOUS
15	ONE	4" RUBBER COUPLING	FERNCO
16	ONE	EXPANSION HAMMER DEVICE	VARIOUS
17	ONE	1" TO 3/4" DOUBLE REDUCING TEE	VARIOUS
18	ONE	3/4" TO 1/2" THREADED REDUCER	VARIOUS
19	ONE	3/4" TO 1/2" REDUCER	VARIOUS
	ONE	1/8" PLASTIC AIR LINE	ACORN
22	ONE	3/4" 90 DEGREE ELBOW PIPE	VARIOUS
23	ONE	HOSE BIB	VARIOUS
24	ONE	ANTI SIPHON	VARIOUS
25	ONE	SOLDERED THREADED FITTING	VARIOUS
26	ONE	1" THREADED CAP	VARIOUS
27	TWO	1 1/2" TO 1" REDUCING TEE	VARIOUS
28	ONE	1" TO 1" FEMALE THREADED COUPLER	VARIOUS
29	ONE	1 1/2" TO 1" REDUCER	VARIOUS
30	ONE	1" TEE	VARIOUS
31	ONE	1" 90 DEGREE ELBOW PIPE	VARIOUS
32	ONE	1" CU PIPE	VARIOUS
33	ONE	1 1/2" TO 1" REDUCING TEE	VARIOUS
34	ONE	1 1/2" TO 1" REDUCING TEE	VARIOUS
35	ONE	1 1/2" TO 1" REDUCING TEE	VARIOUS
	ONE	TRAP PRIMER VALVE	PRIME–RITE

REV	DATE	DESCRIPTION	DRN	APP'D

MADDEN FABRICATION

2550 NW 25th Place • Portland, OR. •97210
Phone: (503) 226-3968 Fax (503) 242-2446

PORTLAND LOO

PLUMBING DETAIL

NAME	DATE	SERIAL NO.	DRW. NO.
LEO	4/16/2015		P2.0

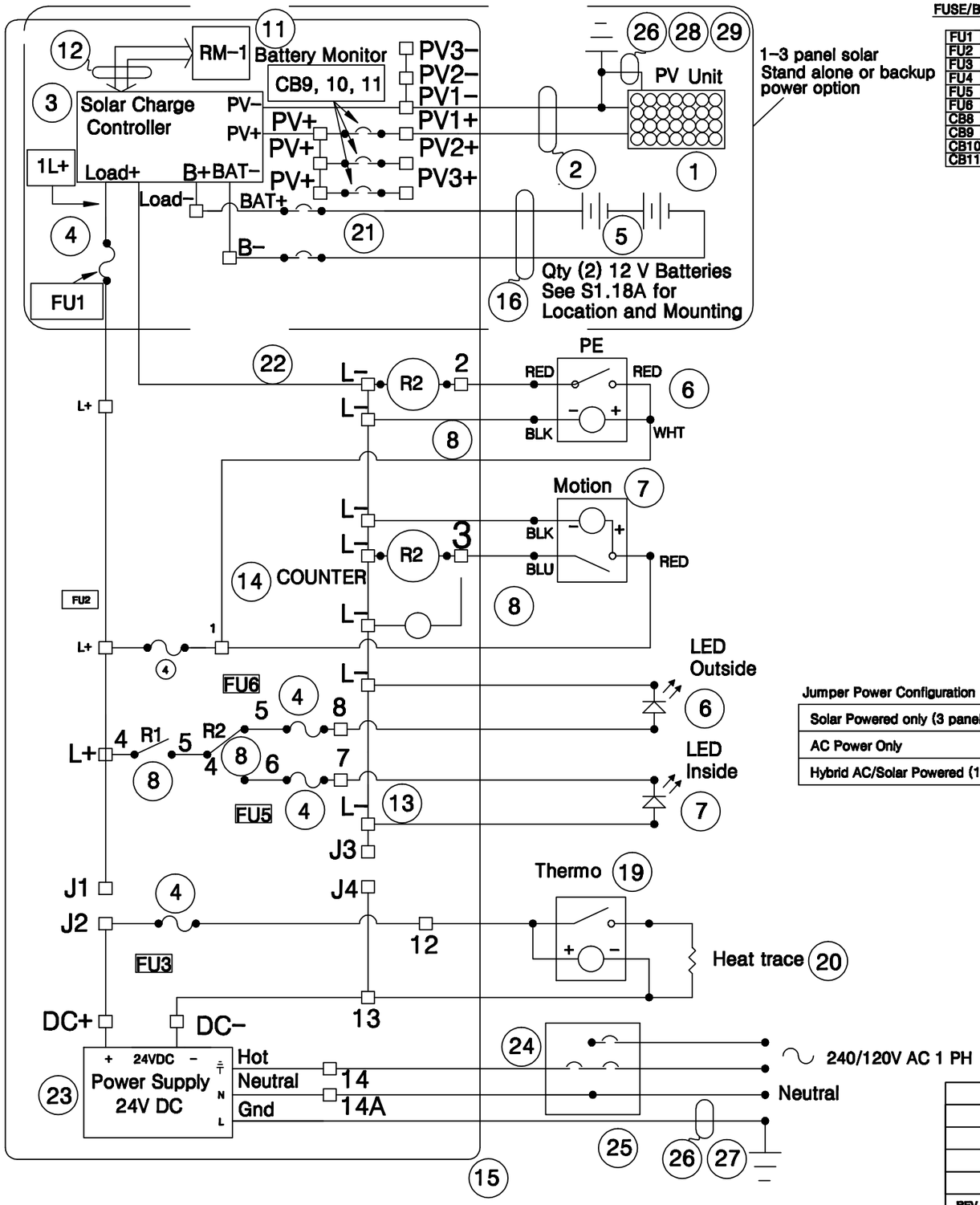

FUSE/BREAKER DESCRIPTION

FU1	MAIN LOAD
FU2	PE/MOTION
FU3	HEAT TRACE
FU4	NOT USED
FU5	INSIDE LED LIGHT
FU6	OUTSIDE LED LIGHT
CB8	MAIN 24VDC BREAKER
CB9	PV1 BREAKER
CB10	PV2 BREAKER
CB11	PV3 BREAKER

TERMINAL DETAIL

Sol+
Sol+
Sol-
Sol-
L-
L-
L-
L-
L+
L+
1
1
1
2
3
3
7
8
12
13
13
13
14
14A
J1
J2
J3
J4

Jumper Power Configuration	J1 to J2	J3 to J4
Solar Powered only (3 panels)	Yes	Yes
AC Power Only	Yes	Yes
Hybrid AC/Solar Powered (1-2 panels)	No	No

BILL OF MATERIAL

ITEM	QTY	DESCRIPTION	MFG.
1	1 - 3	Grape Solar 160W PV Module (or equal)	GRAPE SOLAR
2	1 - 3	MC 4 Cable 30' #10AWG	RLH INDUSTRIES
3	ONE	SS-MPPT-15L SOLAR CHARGE CONTROLLER	MORNINGSTAR CORP
4	5-7	6A-600V Fuse LPCC-6	Buss
5	TWO	MK 8A24 LTP Sealed AGM Battery	MK Battery
6	ONE	24V Photocell EM-24A2	Watt Stopper
7	ONE	Occupancy Sensor WPIR-24	Watt Stopper
8	TWO	24V DC relay RH1B-U-DC24V	IDEC
9	ONE	24V LED Light Rope, White 3W/Ft x 4ft	Flexlight
10	TWO	20", 24V,5W LED Blue light - SALF-QU	Outwater
11	ONE	Battery system moniter RM-1	Morningstar
12	ONE	RJ-11 Meter Cable	VARIOUS
13	ONE	Ground Bus 44CONN-AL	ITE
14	ONE	V8-4816 6 DIGIT COUNTER	REDINGTON COUNTERS
15	ONE	NEMA1 Enclosure 20"x20" 20206-1	BENC
16	ONE	6ga Battery Harness cable	ALLBATTERY
17	Lot	14ga Cu wire THHN-14-19STR-CU	VARIOUS
18	Lot	10ga Cu wire Varies	VARIOUS
19	ONE	Solstat 2-20 Solid State Thermostat	ENGENITY
20	ONE	Heat trace - 10 ft, 24V, 3W/ft Kompensator	HEATLINE
21	THREE	15 Amp, 150V DC Breaker	ALTEC CORP
22	ONE	63 Amp, 125V DC Breaker	ALTEC CORP
23	ONE	Sola Power Supply SDN-10-24-100C	Sola Inc
24	ONE	110V - 15amp Breaker QO120-15A	SQUARE D
25	ONE	LOAD CENTER, 70A Q024L70S 2 BRKR	SQUARE D
26	ONE	Approved UFER ground connection to rebar Sht S2.0	BY OTHERS
27	ONE	4ga Cu wire insulated	VARIOUS
28	LOT	6ga Cu wire insulated	VARIOUS
29	1-3	6ga crimp eyelet and mechanical fastener to PV	VARIOUS
Items not shown on schematic			
A	Lot	Din Rail 2M - 2 ft	WEIDMULLER
B	EIGHT	Modular Fuse Holder CHCC1DI	BUSS
C	TWO	Relay Pin Base 70-459	MAGNECRAFT
D	20	Terminal splice unit	WEIDMULLER
E	TWO	1-5/8" x 1-5/8" x 69" B22SH strut	B-Line or Equal
F	FOUR	3/8" Spring Nut N228	B-Line or Equal
G	FOUR	10-1/2" Shelf Bracket S-205	B-Line or Equal
H	ONE	NEMA1 Panel 20"x20" AW2020	BENC

REV	DATE	DESCRIPTION	DRN	APP'D

MADDEN FABRICATION
2550 NW 25th Place • Portland, OR. •97210
Phone: (503) 226-3968 Fax: (503) 242-2446

PORTLAND LOO

ELECTRICAL SCHEMATIC

NAME	DATE	SERIAL NO.	DRW. NO.
LEO	4/16/2015		E1.0

1. **Terms of Payment.** 30% at time of order, 50% at time of shipment and remaining 20% Net 30 after receipt by customer.
    a. **Deviation from Payment.** Payment Time is of the essence with respect to Buyer's payment of the purchase price, and timely payment shall not be delayed or excused for any reason. Payment agreement between Buyers and other parties, or failure by other parties to pay Buyer or perform any agreement with Buyer shall not result in delay of payment to Madden Fabrication. Madden Fabrication does not accept partial payments, any offsets, credit card merchant fees and/or retainage against the Purchase Order price. Should Buyer not act according to the terms of payment for any reason, the terms will be revoked and any remaining goods or services not yet delivered are subject to pre-payment terms whereby payment, in full is due 10 days prior to delivery. Any amounts not paid when due shall bear interest at the rate of 18 percent per annum or the highest lawful rate applicable, if such rate is less than 18 percent, from the date payment was due. The Madden Fabrication Warranty becomes null and void when payment is more than 5 business days past due.
    b. **Tax.** Unless otherwise indicated on the Madden Fabrication quote or purchase order, any sales, use, consumption, value added or other goods/services based tax imposed by a state, county/local or other agency with jurisdictional authority is excluded from this order. Buyer is responsible for remitting any taxes that are applicable.
    c. **Fees.** Madden Fabrication is not responsible for any fees and or expenses related to licensing, inspections and engineering as required by individual states or local governments.
2. **Change Orders.** All change orders must be signed by the buyer. Prices stated herein are valid for 1 month from the purchase order date, or two weeks from the purchase order date if unsigned, at which time Madden Fabrication may adjust its price if cost factors warrant. Additionally, any modifications to Madden Fabrication Portland Loo quote to customer, prior to formal approval, may result in a price adjustment. Any modification, to Madden Fabrication Portland Loo quote to customer, after formal approval, requested or required by Buyer for any reason shall be performed by Madden Fabrication at Buyer's expense, as follows: (i) Buyer shall submit a written description of the modifications to Madden Fabrication (ii) within 14 days of receipt of Buyer's description, Madden Fabrication shall provide to Buyer a written price quote for the modifications requested; (iii) Buyer shall pay the Change Order Invoice to Madden Fabrication in accordance with payment terms.
3. **Terms of Delivery.** Madden Fabrication will not be liable for any delay in the performance of orders or contracts, or in the delivery or shipment of goods, or for a damages suffered by the buyer by reason of such delay, when such delay is beyond Madden Fabrication control. All goods are shipped F.O.B. Portland, Oregon, which means that the risk of loss or damage to the goods and risk of delays in transit passes to the Buyer when the goods are duly delivered to the carrier at Portland, Oregon. Madden Fabrication has no control over arrival time of shipment, and shall not be responsible for delays in shipments once the goods leave Madden Fabrication plant.
    a. **Procedures for Handling Products.** Madden Fabrication suggested procedures for handling products are as follows:

i. All Madden Fabrication materials, whether palletized or separated from a pallet, must be handled per the instructions detailed in the Portland Loo Installation Procedures submitted with respect to the specified model of Portland Loo restroom facility or component.
ii. All material received from, but not manufactured by Madden Fabrication must be handled per the specific handling instructions of the manufacturer of the material.
iii. Proper handling equipment its supply and operation are strictly the responsibility of the Buyer.

4. **Description of Products and Warranty.** The Portland Loo and all its associated components shall be warranted against defects in materials and workmanship for a period for not less than one year from date of final acceptance.
5. **Time of Shipment and Delivery.** Unless otherwise specified on the purchase order, Madden Fabrication may ship goods pursuant to an order at any time after the goods are completed and ready for shipment. Further, unless payment has been made in advance, if a carrier holding a Madden Fabrication shipment order by a Buyer is ready to deliver the goods to the buyer, the Buyer agrees to accept the goods at the carrier's earliest possible delivery date and time.
6. **Store & Invoice.** If Buyer delays shipment, regardless of the reason for delay, Madden Fabrication is permitted to invoice and the Buyer accepts the obligation to pay Madden Fabrication under its agreed upon payment terms, using the date the order was ready for shipment as the invoice date. Once the order is invoiced, the materials shall become property of the agency/contractor. Further Madden Fabrication may at its sole discretion invoice the Buyer for a **minimum** of $450 per month of on-site storage per Loo. Deliveries that are delayed by the Buyer may be canceled by Madden Fabrication and the goods returned to Madden Fabrication at its discretion. Any costs or difficulties arising from the Buyer's act in delaying receipt of Madden Fabrication's shipments are the complete responsibility of the Buyer. The Buyer agrees to pay for the complete shipment cost if Madden Fabrication elects to cause the goods to be returned to Madden Fabrication or delivered to another Buyer.
7. **Cancellation.** Mutual acceptance of the purchase order indicates notice to Madden Fabrication to proceed with the provisions of design service required in completing its fabrication of Portland Loo per this purchase order agreement. Should Buyer cancel its purchase order prior to granting Notice to Proceed in production of the Portland Loo, Buyer shall pay the design fee stated in the purchase order as compensation for design services rendered. Madden Fabrication requires the Buyer to indicate approval of its supply offering by executing the signature page of the Purchase order agreement document and Notice to Proceed. Upon granting Madden Fabrication approval of this purchase order agreement and Notice to Proceed, Buyer accepts responsibility for all costs incurred by Madden Fabrication in producing the Portland Loo for Buyer.

8. **Special Orders.** All products sold by Madden Fabrication are custom to each particular job. Payments toward any product, once made are non-refundable.
9. **Contract Documents.** Together with the Purchase Order, the following constitute the "Contract Documents" and the entire contract between the parties, either written or oral: (i) Approved "final" Madden Fabrication purchase order agreement and (ii) Change Order form (if applicable).
10. **Attorney Fees.** If Buyer fails to pay any amount when due, and Madden Fabrication incurs any expenses in pursuant of collection, Buyer agrees to pay the reasonable attorney fees (whether or not litigation is commenced) and other costs of such collection.
    a. In any dispute involving the interpretation or enforcement of this agreement or involving issues related to bankruptcy (whether or not such issues related to the terms of this agreement), the prevailing party shall be entitled to recover from the non-prevailing party reasonable attorney fees, paralegal fees, costs disbursements, and other expense incurred by the prevailing party in the dispute, including those arising before and at any trial, arbitration, bankruptcy, or other proceeding, and in any appeal or review thereof. In addition, the amount recoverable by the prevailing party shall include an amount estimated as the fees, costs, disbursement, and other expenses that will be reasonably incurred in collecting monetary judgment or award, or otherwise enforcing any order, judgment, award, or decree entered in the proceeding
    b. This agreement shall be interpreted and enforced according to the laws of the State of Oregon. The parties irrevocably submit and consent to the jurisdiction of the Multnomah County circuit courts of the State of Oregon and the Oregon Federal District Court, with respect to litigation regarding any dispute, claim or other matter related to this contract.

11. Intellectual Property. Madden Fabrication makes and sells the Portland Loo under license from the City of Portland, Oregon. Aside from implied licenses sufficient to install and maintain the Portland Loo purchased by the Buyer under this Agreement, the Buyer's purchase of the Portland Loo shall not transfer any intellectual property rights pertaining to the Portland Loo, including but not limited to patent, trademark, and copyright rights in the design of the Portland Loo or in the name PORTLAND LOO. All such intellectual property rights shall remain owned by the City of Portland, subject to any licenses or assignments granted or executed by the City of Portland. The Buyer shall have no right to make copies of the Portland Loo, or to sublicense or otherwise commercially use any intellectual property associated with the Portland Loo.

12. **Controlling Provisions.** The terms and conditions of this Purchase Order shall supersede and control any provisions, terms and conditions contained on any confirmation order, Purchase Order, or other writing the Buyer may give or receive, and the rights of the parties shall be governed exclusively by the provisions, terms and conditions thereof.
13. **Binding Effect.** This Purchase Order agreement shall be effective and in force only when signed by Buyer and Madden Fabrication. Madden Fabrication must consent to any assignment of this Purchase Order agreement in writing. Subject to any restrictions upon assignment, this Purchase Order agreement shall be binding on and inure to the benefit of the heirs, legal representative, successors, and assigns of the parties.

14. Notice. All notices required by this Purchase Order shall be in writing addressed to the party to whom the notice is directed at the address of that party set forth is this Purchase Order agreement and shall be deemed to have be given for all purposes upon receipt when personally delivered; one day after being sent, when sent by recognized overnight courier service; three days after deposit in United States Mail, postage prepaid, registered or certified mail; or on the date transmitted and received by facsimile. Any party may designate a different mailing address or a different person for all future notices by notice given in accordance with this paragraph.

15. Modification. No modification of this Purchase Order agreement shall be valid unless it is in writing and is signed by all of the parties.

16. Interpretation. The paragraph headings are for the convenience of the reader only and are not intended to act as a limitation of the scope or meaning of the paragraphs themselves. This agreement shall not be construed against the drafting party.

17. Severability. The invalidity of any terms or provisions of the agreement shall not affect the validity of any other provisions.

18. Waiver. Waiver of any party of strict performance of any provisions of this Purchase Order agreement shall not be a waiver of or prejudice any party's right to require strict performance of the same provision in the future or any other provision.

19. Counterparts. This Purchase Order agreement may be executed in multiple counterparts, each of which shall constitute one agreement, even though all parties do not sign the same counterpart.

X _____ X ____/ ____ / __.

Buyer's Authorized Representative Date

X _____ X ____/ ____ / __.

Portland Loo Representative Date

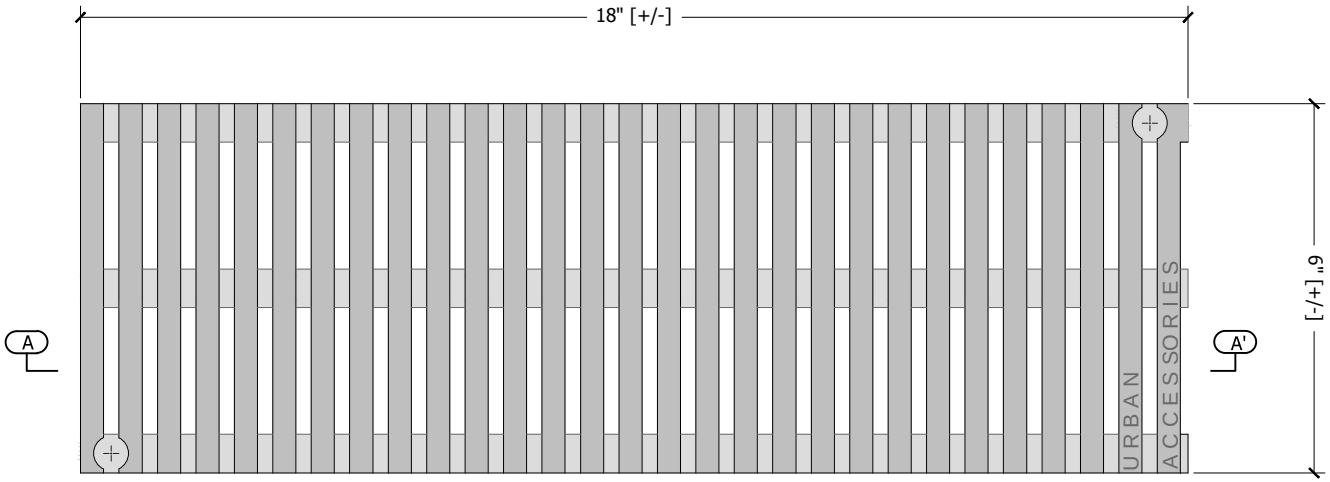

Plan

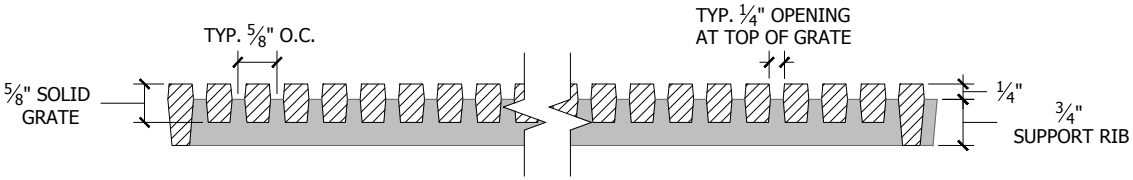

Section A-A'

SPECIFICATIONS

- Material will be high quality 100% recycled grey iron; ASTM A48 class 35b or better; hardness 170-223 brinnell (unless specified otherwise; see below).

Material:

- □ Grey iron ASTM A48 (standard)
- □ Aluminum, ASTM B26
- □ Ductile iron, (required for all load ratings higher than pedestrian) ASTM A536 class 65-45-12.
- □ Nickel bronze (ASTM B30)
- □ Bronze (ASTM B26)

- Finish will be natural patina of raw iron (unless specified otherwise; see below).

Finish:

- □ Raw (standard)
- □ Rust conditioner
- □ Polyester Powder Coat*
- □ Liquid Coat (wet paint)*
  Color:
  *Please specify standard UA color or mfr. name and color code.
- □ Brush (bronze/nickel/aluminum only)
- □ Polish (bronze/nickel/aluminum only)
- □ Galvanized (grey iron and ductile iron only)
- □ Other:

- Dimensions are nominal.

Notes

1) Grate is 1" thick at edge.
2) No openings greater than 1/4", in conformance with ADA Accessibility Guidelines.
3) By default, the last grate in a trench drain will be sheared to meet a drain length specified at the time of order. Alternately, the trench drain length may be adjusted to the nearest whole grate (tolerances in the grate size WILL compound across the overall run). Please provide instructions in the comments section below.
4) 36.5 sq. in. open area per grate.
5) Grate weighs 14.5 lbs.

Comments:

Trench Grate

6" x 18" Jamsion

Page 1 of 1 Date: 2/26/13

URBAN ACCESSORIES
Founded 1972

465 E. FIFTEENTH ST. sales@urbanaccessories.com
TACOMA, WA 98421 www.urbanaccessories.com
(877) 487-0488

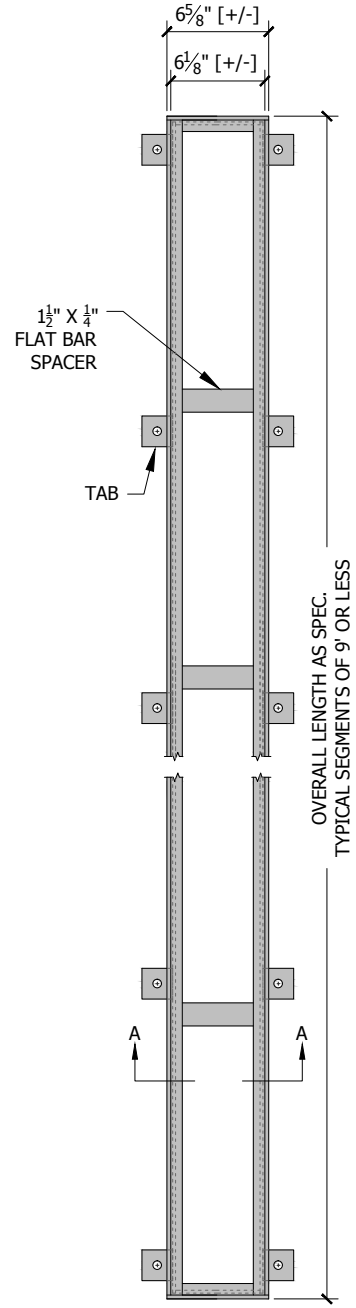

Plan

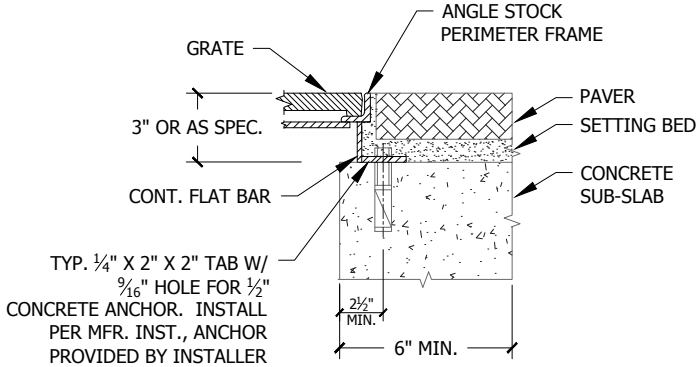

Detail Elevation A-A

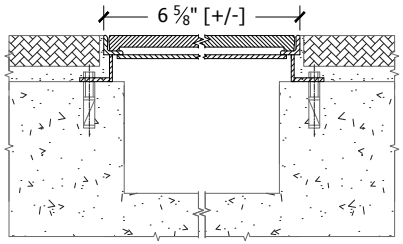

Elevation A-A

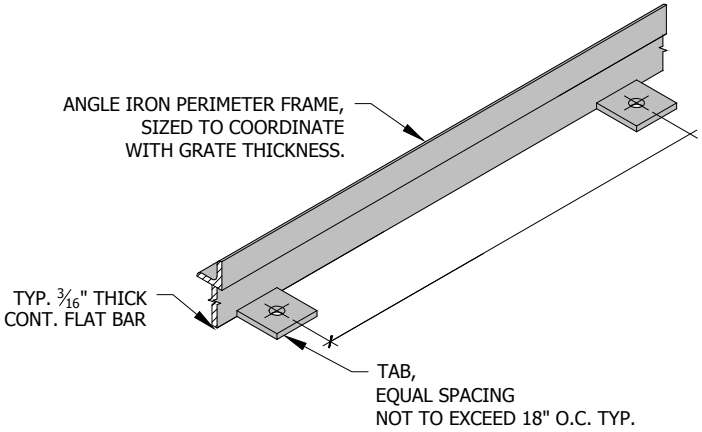

Isometric

SPECIFICATIONS

- Frames are constructed of mild steel ASTM A36 (unless specified otherwise; see below).

  Material:
  - □ Mild Steel ASTM A36 (standard)
  - □ Stainless Steel grade 304L
  - □ Architectural Bronze, ASTM B455
  - □ Structural Aluminum, ASTM B221

- Finish will be natural patina of raw steel (unless specified otherwise; see below).

  Finish:
  - □ Raw (standard)
  - □ Polyester Powder Coat*
  - □ Liquid Coat (wet paint)*
    Color:
    *Please specify standard UA color or mfr. name and color code.
  - □ Galvanized
  - □ Other:

- Frame is load rated for pedestrian traffic only (unless specified otherwise; see below).

  Load Classifications:
  - □ Pedestrian (standard)
  - □ Light Vehicular
  - □ H20/HS20
    (Additional steel support may be added for optional load classes. Please contact UA for revised cut sheet, as necessary.)

- Typical 1/8" horizontal gap between grate and frame. All visible welds to be ground smooth on outside edges. Frames will be true to square or diameter. Top of grate flush with grade of surrounding topping material (paver, concrete slab, etc.).

- Dimensions are nominal.

Comments:

Trench Grate Frame

6" Wide Type "PA" Pedestrian Duty

Page: 1 of 1 Date: 5/22/12

URBAN ACCESSORIES
Founded 1972

465 E. FIFTEENTH ST. sales@urbanaccessories.com
TACOMA, WA 98421 www.urbanaccessories.com
(877) 487-0488

x3 Arrayed

TOP

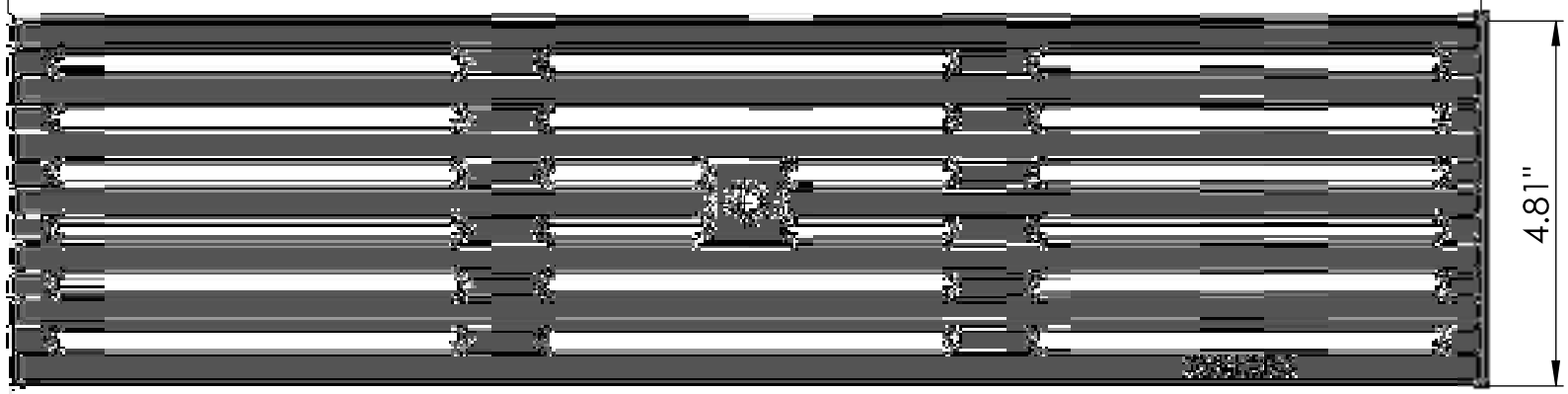

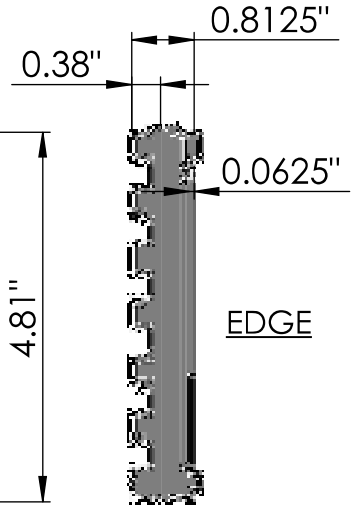

IRON AGE DESIGNS
2104 SW 152nd St.#4 TEL 206.276.0925
Burien, WA 98166 FAX 206.257.0318
www.ironagegrates.com

Que 5"x20" Heel-Proof Trench Grate

JOB NO.

DWG. NO. QUE.I.5x20_Alum

Drawn by: JH

Date: 12/28/12

Scale: NTS

NOTES:

1. Material: cast ductile iron
2. Natural finish
3. Edge thickness: 7/8"
4. No openings greater than 1/4"
5. Weight approx. <12lbs
6. Fits drain bodies manufactured by:
   ABT® PolyDrain®, ACO™ K100/K100S/KS100, MEA® 1000 Series
7. Due to casting inconsistencies all dimensions are nominal

©2012 Iron Age Designs

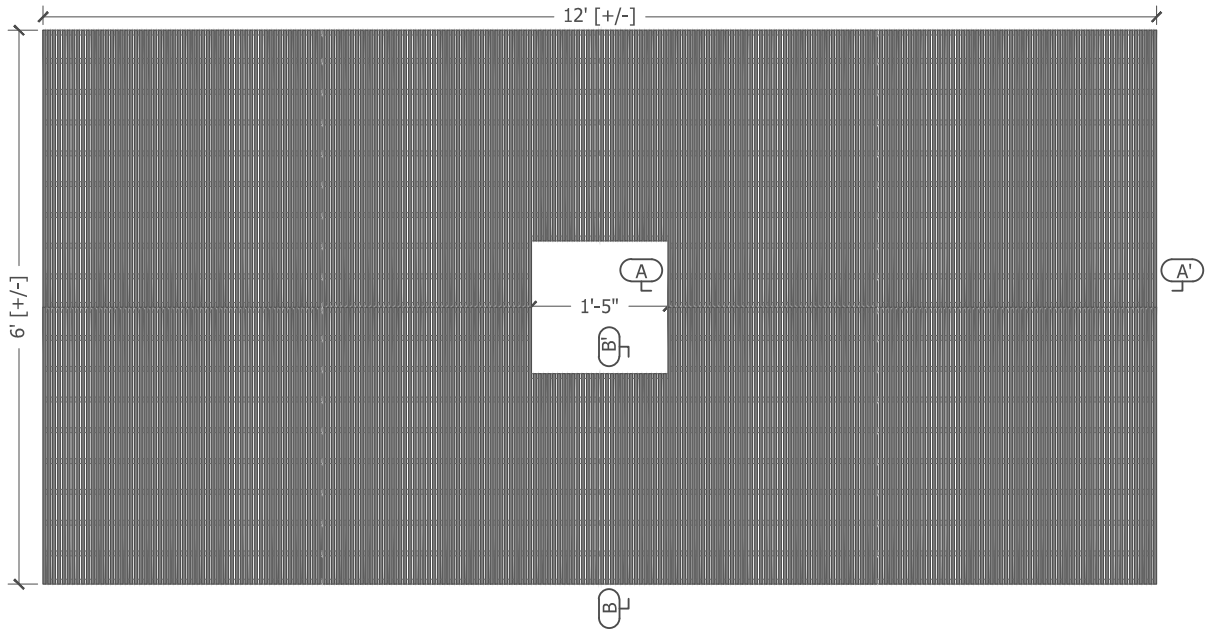

Plan

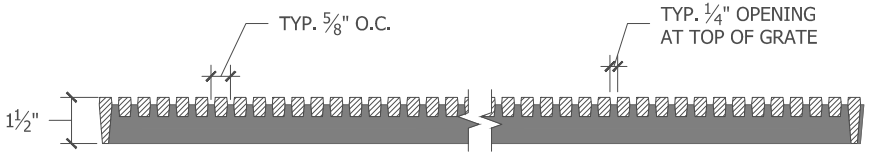

Section A-A'

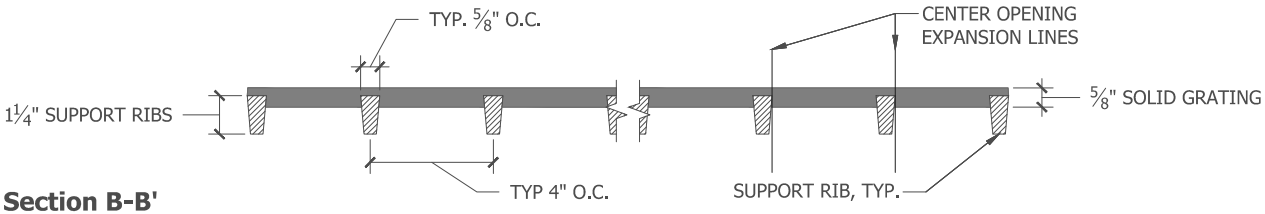

Section B-B'

SPECIFICATIONS

- Material will be high quality 100% recycled grey iron; ASTM A48 class 35b or better; hardness 170-223 brinnell (unless specified otherwise; see below).

Material:

- ☐ Grey iron ASTM A48 (standard)
- ☐ Aluminum, ASTM B26
- ☒ Ductile iron, (required for all load ratings higher than pedestrian) ASTM A536 class 65-45-12.
- ☐ Nickel bronze (ASTM B30)
- ☐ Bronze (ASTM B26)

- Finish will be natural patina of raw iron (unless specified otherwise; see below).

Finish:

- ☒ Raw (standard)
- ☐ Rust conditioner
- ☐ Polyester Powder Coat*
- ☐ Liquid Coat (wet paint)*
  Color:
  *Please specify standard UA color or mfr. name and color code.
- ☐ Brush (bronze/nickel/aluminum only)
- ☐ Polish (bronze/nickel/aluminum only)
- ☐ Galvanized (grey iron and ductile iron only)
- ☐ Other:

- Dimensions are nominal.

Notes

1) Cast in eight pieces.
2) Grate is 1- ½" thick at edge.
3) No openings greater than 5/16", in conformance with ADA Accessibility Guidelines.

Comments:

Tree Grate

6' x 12' Jamison
PN: Burlington

Page 1 of 4 Date: 3/29/18

URBAN ACCESSORIES
Founded 1972

465 E. FIFTEENTH ST. sales@urbanaccessories.com
TACOMA, WA 98421 www.urbanaccessories.com
(877) 487-0488

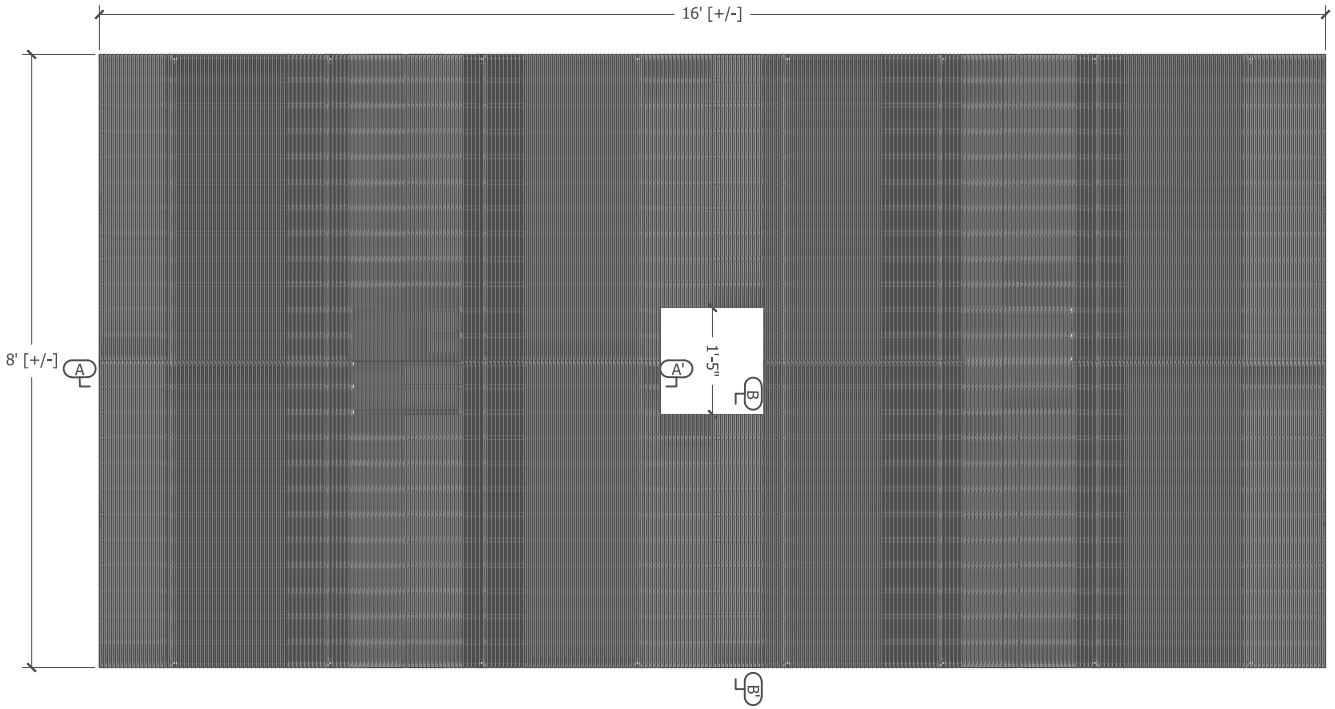

Plan

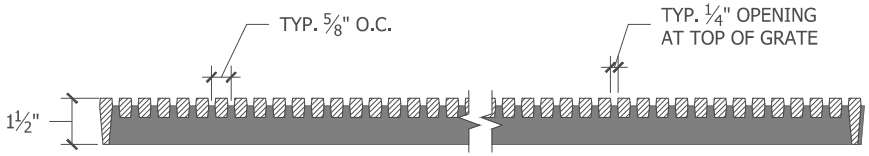

Section A-A'

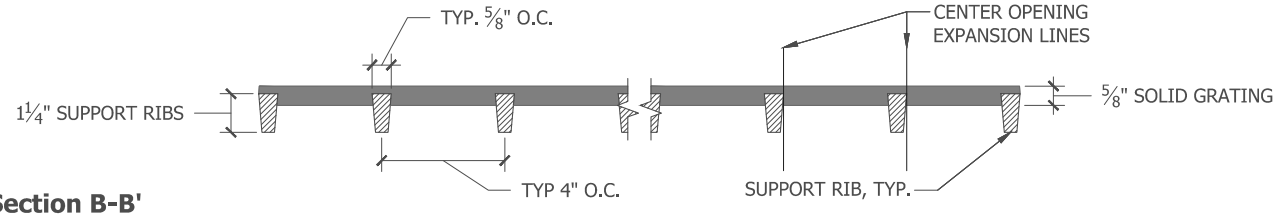

Section B-B'

SPECIFICATIONS

- Material will be high quality 100% grey iron; ASTM A48 class 35b or better; hardness 170-223 brinnell (unless specified otherwise; see below).

Material:

- ☐ Grey iron ASTM A48 (standard)
- ☐ Aluminum, ASTM B26
- ☒ Ductile iron, (required for all load ratings higher than pedestrian) ASTM A536 class 65-45-12.
- ☐ Nickel bronze (ASTM B30)
- ☐ Bronze (ASTM B26)

- Finish will be natural patina of raw steel (unless specified otherwise; see below).

Finish:

- ☒ Raw (standard)
- ☐ Rust Conditioner*
- ☐ Liquid Coat (wet paint)* Color:
  *Please specify standard UC color or mfr. name and color code.
- ☐ Brush (bronze/nickel/aluminum only)
- ☐ Polish (bronze/nickel/aluminum only)
- ☐ Galvanized (grey iron and ductile iron only)
- ☐ Other:

- Dimensions are nominal.

Notes

1) Cast in eight pieces.
2) Grate is 1-½" thick at edge.
3) No openings greater than 5/16", in conformance with ADA Accessibility Guidelines.

Comments:

Tree Grate

8' x 16' Jamison
PN: Burlington

Page 2 of 4 Date: 3/29/18

URBAN ACCESSORIES
Founded 1972

465 E. FIFTEENTH ST. sales@urbanaccessories.com
TACOMA, WA 98421 www.urbanaccessories.com
(877) 487-0488

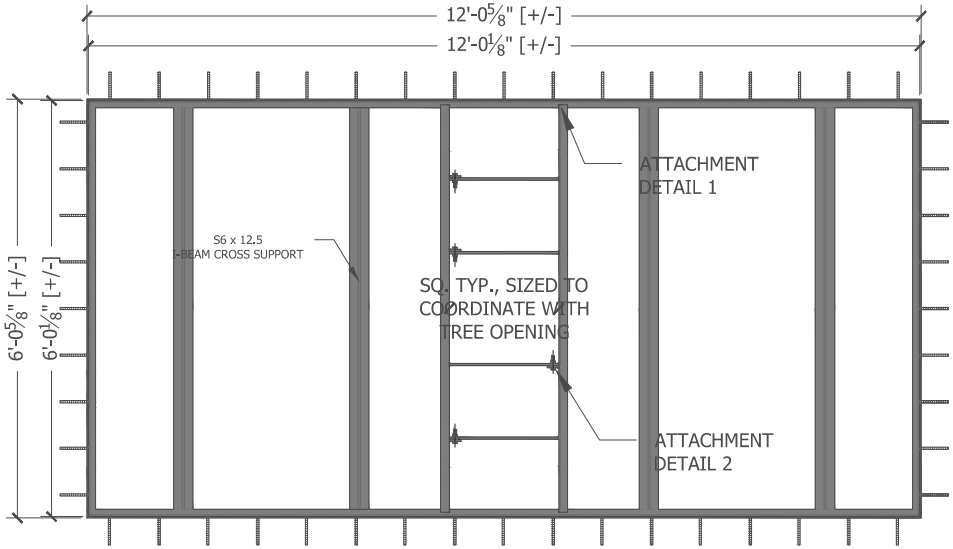

Plan

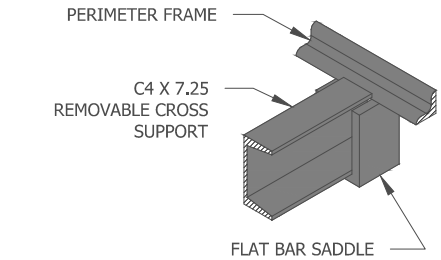

Detail 1

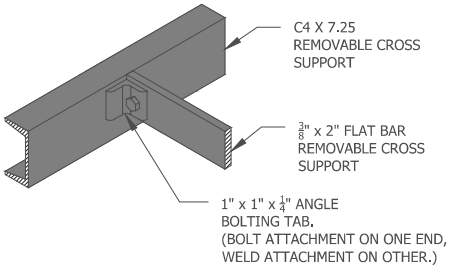

Detail 2

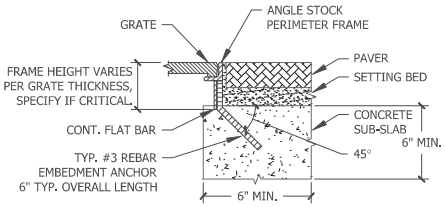

P Elevation

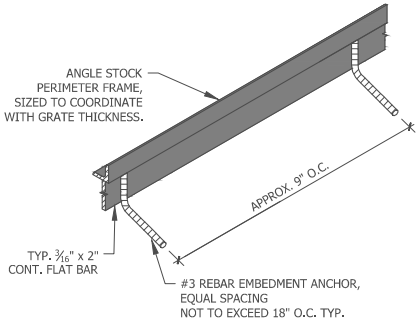

P Isometric

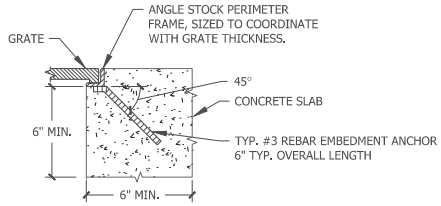

S Elevation

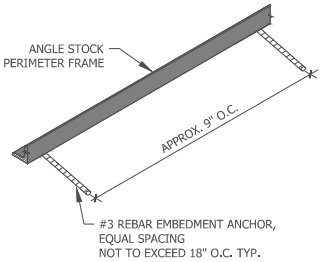

S Isometric

SPECIFICATIONS

- Frames are constructed of mild steel ASTM A36 (unless specified otherwise; see below).

Material:
- ☒ Mild Steel ASTM A36 (standard)
- ☐ Stainless Steel grade 304L
- ☐ Architectural Bronze, ASTM B455
- ☐ Structural Aluminum, ASTM B221

- Finish will be natural patina of raw steel (unless specified otherwise; see below).

Finish:
- ☒ Raw (standard)
- ☐ Polyester Powder Coat*
- ☐ Liquid Coat (wet paint)*
  Color:
  *Please specify standard UA color or mfr. name and color code.
- ☐ Galvanized
- ☐ Other:

- Frame is load rated for pedestrian traffic only (unless specified otherwise; see below).

Load Classifications:
- ☐ Pedestrian (standard)
- ☐ Light Vehicular
- ☒ H20/HS20
  (Additional steel support may be added for optional load classes. Please contact UA for revised cut sheet, as necessary.)

- Typical 1/8" horizontal gap between grate and frame. All visible welds to be ground smooth on outside edges. Frames will be true to square or diameter. Top of grate flush with grade of surrounding topping material (paver, concrete slab, etc.).

- Dimensions are nominal.

Comments: I-Beams are welded

Tree Grate Frame

6' x 12' Combo Type
PN: Burlington

Page: 3 of 4 Date: 3/30/18

URBAN ACCESSORIES
Founded 1972

465 E. FIFTEENTH ST. sales@urbanaccessories.com
TACOMA, WA 98421 www.urbanaccessories.com
(877) 487-0488

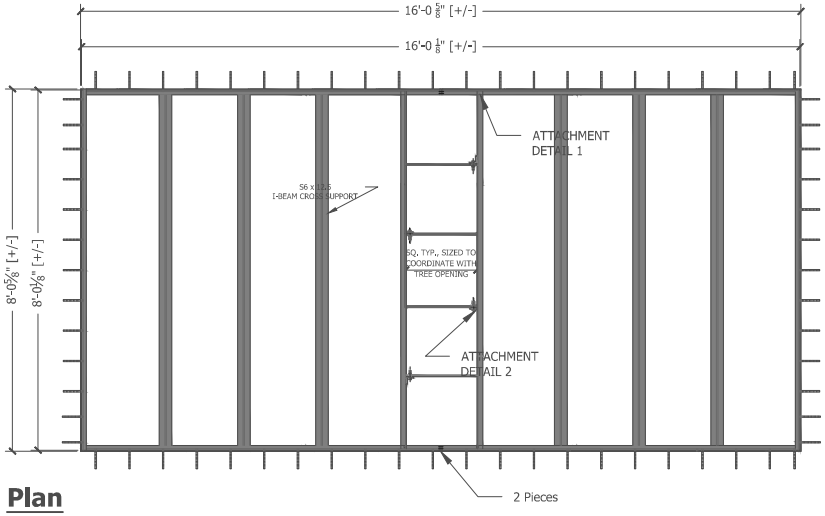

Plan

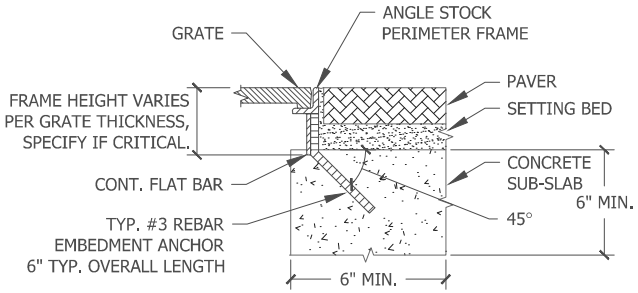

"P" Elevation

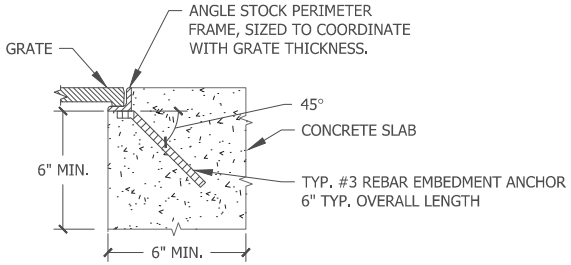

"S" Elevation

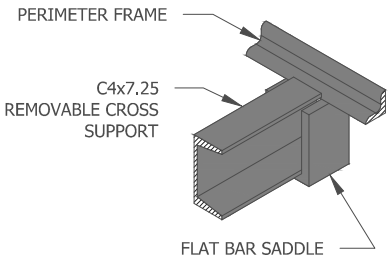

Detail 1

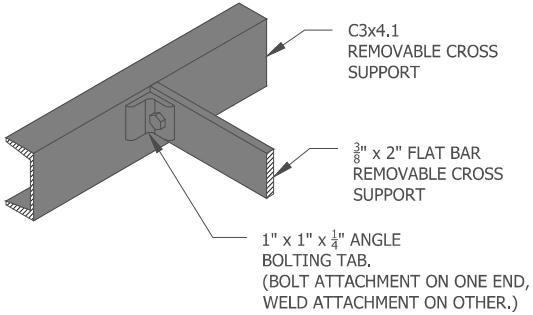

Detail 2

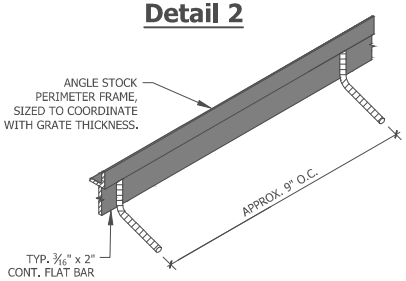

P Isometric

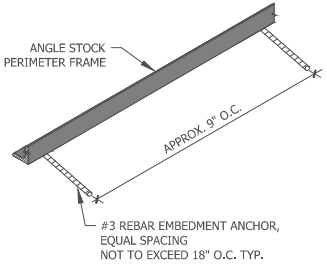

S Isometric

SPECIFICATIONS

- Frames are constructed of mild steel ASTM A36 (unless specified otherwise; see below).

Material:
- ☒ Mild Steel ASTM A36 (standard)
- ☐ Stainless Steel grade 304L
- ☐ Architectural Bronze, ASTM B455
- ☐ Structural Aluminum, ASTM B221

- Finish will be natural patina of raw steel (unless specified otherwise; see below).

Finish:
- ☒ Raw (standard)
- ☐ Polyester Powder Coat*
- ☐ Liquid Coat (wet paint)*
  Color:
  *Please specify standard UA color or mfr. name and color code.
- ☐ Galvanized
- ☐ Other:

- Frame is load rated for pedestrian traffic only (unless specified otherwise; see below).

Load Classifications:
- ☐ Pedestrian (standard)
- ☐ Light Vehicular
- ☒ H20/HS20
  (Additional steel support may be added for optional load classes. Please contact UA for revised cut sheet, as necessary.)

- Typical 1/8" horizontal gap between grate and frame. All visible welds to be ground smooth on outside edges. Frames will be true to square or diameter. Top of grate flush with grade of surrounding topping material (paver, concrete slab, etc.).

- Dimensions are nominal.

Comments: I-Beams are Welded

Tree Grate Frame

8' x 16' Type Combo "S"/"P"
PN: Burlington

Page: 4 of 4 Date: 3/30/18

URBAN ACCESSORIES
Founded 1972

465 E. FIFTEENTH ST. sales@urbanaccessories.com
TACOMA, WA 98421 www.urbanaccessories.com
(877) 487-0488

URBAN ACCESSORIES
465 EAST 15th ST., TACOMA, WA 98421
(877) 487-0488 | sales@urbanaccessories.com | www.urbanaccessories.com

Center Opening Expansion Instructions

- Locate appropriate knock out ring location.
- With circular grinder, score the top and bottom of the casting at least 1/4 through the total thickness in all locations required for center expansion.
- Gently tap the portion of the grate you wish to remove until grate breaks at the score locations.
- After center is removed, grind the inside face the tree grate smooth to remove any excess metal.

Division 32

Section 32 94 43
Tree Grates

PART 1 GENERAL

1.1 SECTION INCLUDES

A. Tree Grate and installation frames.

1.2 SUBMITTALS

A. Contractor shall submit ____ set(s) of drawings of tree grates and frames for review by architect prior to purchase and installation.

B. Contractor submittal shall include full scale proof of “Historic Route – Solana Beach” emblem.

1.3 QUALITY ASSURANCE

A. Manufacturer Qualifications: Minimum 25 years tree grate manufacturing experience.

a. Castings will be squared and flat, free of burrs, slag, air pockets, blow holes, flashing and grinding or welding on exposed surfaces. Excessive warping or shrinkage is not acceptable.

b. All visible welds on installation frames to be ground smooth. Frames will be true to specified diameter.

B. Installer qualifications: 2 years minimum experience installing tree grates and support frames.

1.4 DELIVERY, STORAGE, AND HANDLING

A. Inspect material immediately upon delivery, noting on delivery receipt all damage and/or discrepancy between delivered material and packing slip

B. Store product in manufacturer's packaging until ready to install.

1.5 WARRANTY

A. Tree grates and frames shall be warranted by the Manufacture against defects in materials and workmanship for a minimum of one (1) years

PART 2 PRODUCTS

2.1 TREE GRATES AND FRAMES:

A. Manufacturer: Tree Grates and Frames shall be as supplied by Urban Accessories, Inc., 465 East Fifteenth Street, Tacoma, WA 98421 – PH: (253) 572-1112 or sales@urbanaccessories.com.

B. Tree Grates shall be: _____ [Style and Size], as per drawings.

a. Tree Grate material shall be high quality, 100% recycled, cast grey iron, per ASTM A48 class 35b or better; hardness 170-223 brinnell. [Other Options Available]

b. Finish on Tree Grates shall be Raw Natural Finish. [Other Options Available]

C. Tree Grate Frames shall be Type “S” Frames, for embedded installation into new concrete surround.

a. Tree Grate Frame material shall be mild steel angle iron and other shapes as necessary, per ASTM A36

b. Finish on Tree Grate Frames shall Raw Natural Finish

PART 3 EXECUTION

3.1 EXAMANATION

A. Do not begin installation until site is properly prepared.

B. If substrate preparation is the responsibility of another trade, please coordinate with and notify Architect of unsatisfactory preparation before proceeding.

3.2 PREPERATION

A. Clean surfaces thoroughly prior to installation

B. Prepare surface as needed to perform installation per manufacturer’s recommendation.

3.3 INSTALLATION

A. Install tree grates in relation to adjacent paving surface with uniformity of appearance, in locations as indicated on plans.

B. Install tree grate frames by incorporating them into the tree pit forming material, taking care to insure that the frame is on an FLAT PLANE, and sufficient bracing is in place to prevent frame deformation during concrete pouring and curing.

C. Clean concrete debris from tree grate frame.

D. Install tree grate, grinding leveling pads and shimming as needed to hold tree grates level and prevent rocking. Gap between grate and frame in finished installation shall not exceed 1/8” on all sides.

END OF SECTION

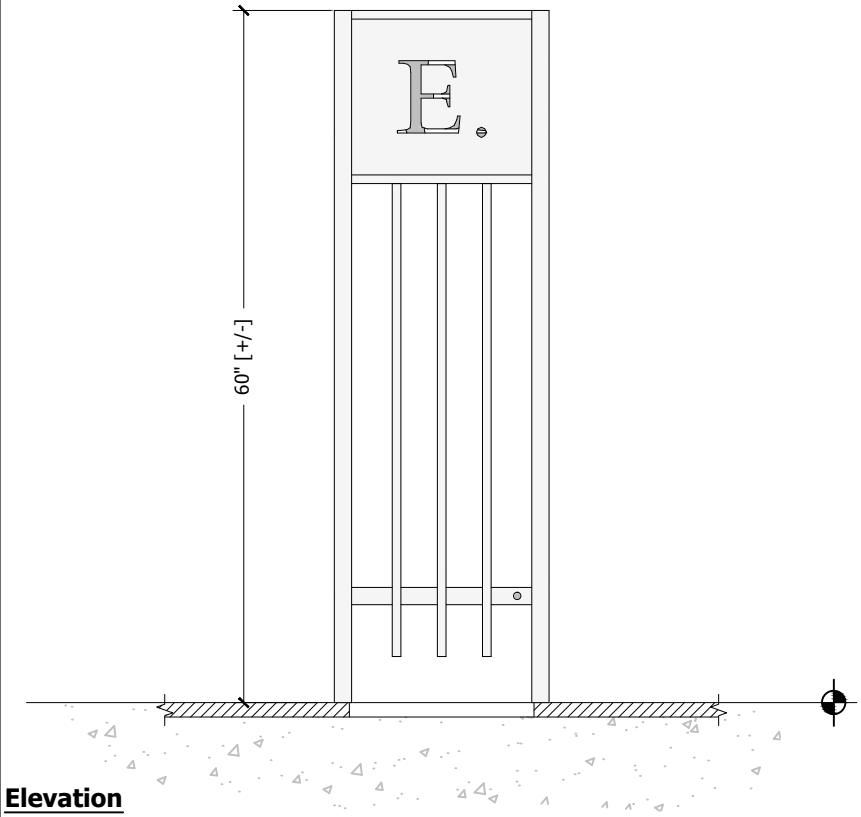

Elevation

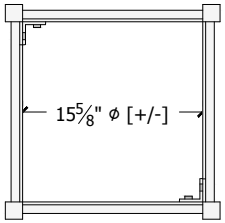

Plan View

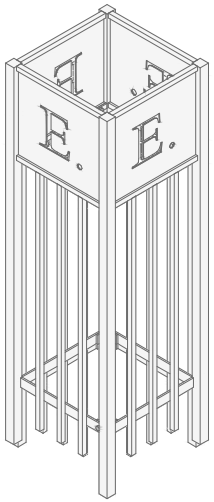

Isometric

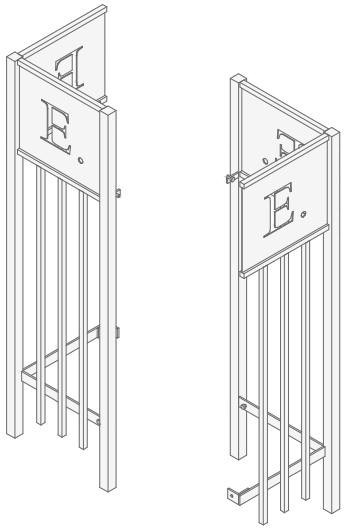

Exploded Isometric

SPECIFICATIONS

- Cast components will be of 100% recycled aluminum; ASTM B261.

- Castings will be squared and flat, free of burrs, slag, air pockets, blow holes, flashing, and grinding or welding on exposed surfaces. Excessive warping or shrinkage is not acceptable.

- Fabricated components will be mild carbon steel, ASTM A36.

- All visible welds to be ground smooth on outside edges.

- Fabrication will be true to square, or diameter and sized within 1/8".

- Finish to be powder coat, standard UA color and applied per UA specifications. If alternate color or finish is required, please provide all finish information for UA approval.

- Dimensions shown are nominal.

- For cases of "or equal" consideration, our finished, full size product should be compared with the alternative product for general quality, surface finish, precise pattern work, metal characteristics, and overall design aesthetics.

Tree Guards

Any Street

Page: 1 of 1 Date: 8/13/13

URBAN ACCESSORIES
Founded 1972

465 E. FIFTEENTH ST. sales@urbanaccessories.com
TACOMA, WA 98421 www.urbanaccessories.com
(877) 487-0488

VICTOR STANLEY, INC.
-Manufacturers of Quality Site Furnishings since 1962-

P.O. DRAWER 330 - DUNKIRK, MD 20754 USA
TOLL FREE: (800) 368-2573 (USA & CANADA)
TEL (301) 855-8300 - FAX (410) 257-7579
WEB SITE: HTTP://WWW.VICTORSTANLEY.COM

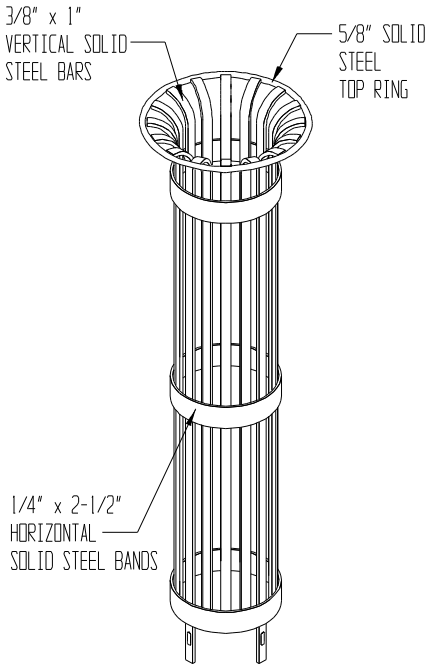

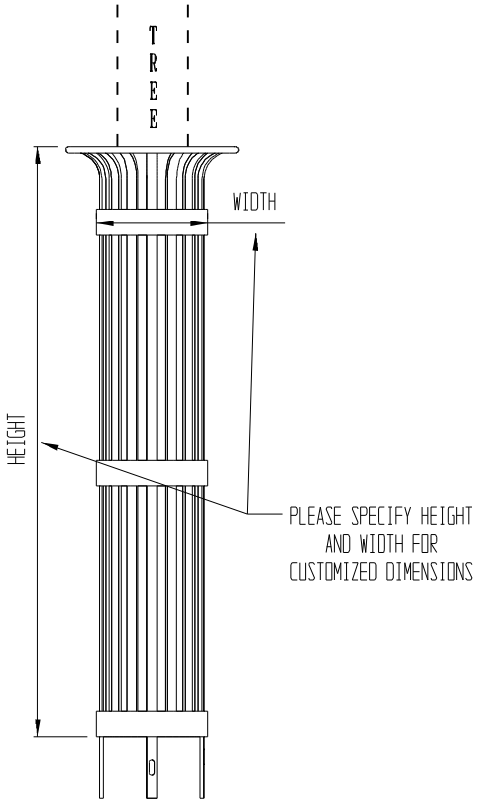

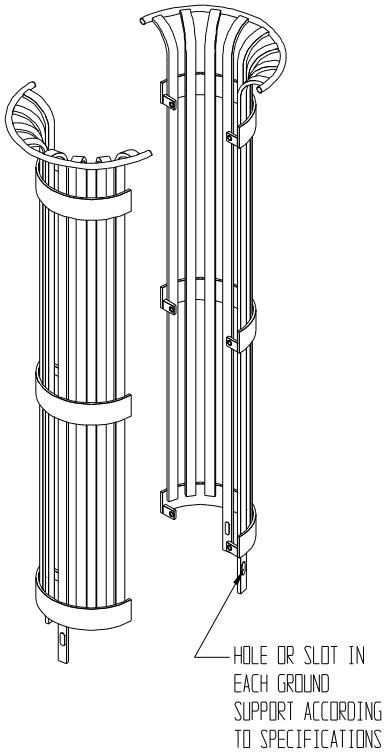

AVAILABLE OPTIONS:

POWDER COATING
10 STANDARD COLORS, CUSTOM COLORS (INCLUDING THE RAL RANGE)

WIDTH & HEIGHT
CUSTOM HEIGHT AND WIDTH: PLEASE SPECIFY FOR CUSTOMIZED DIMENSIONS

NOTES:

1. DRAWING NOT TO SCALE. DO NOT SCALE DRAWINGS.
2. ALL FABRICATED METAL COMPONENTS ARE STEEL SHOTBLASTED, ETCHED, PHOSPHATIZED, PREHEATED, AND ELECTROSTATICALLY POWDER-COATED WITH T.G.I.C. POLYESTER POWDER COATINGS. PRODUCTS ARE FULLY CLEANED AND PRETREATED, PREHEATED AND COATED WHILE HOT TO FILL CREVICES AND BUILD COATING FILM. COATED PARTS ARE THEN FULLY CURED TO COATING MANUFACTURER'S SPECIFICATIONS. THE THICKNESS OF THE RESULTING FINISH COAT AVERAGES 8-10 MILS (200-250 MICRONS).
3. THIS VICTOR STANLEY, INC. PRODUCT MUST BE PERMANENTLY AFFIXED TO THE GROUND. CONSULT YOUR LOCAL CODES FOR REGULATIONS.
4. ANCHOR BOLTS PROVIDED BY OTHERS.
5. FOR HIGH SALT ABUSIVE CLIMATES, HOT DIP GALVANIZING BEFORE POWDER COATING IS AVAILABLE. SEE WRITTEN SPECIFICATIONS FOR DETAILS.
6. ALL SPECIFICATIONS ARE SUBJECT TO CHANGE. CONTACT MANUFACTURER FOR DETAILS.
7. THIS PRODUCT IS SHIPPED PARTIALLY UNASSEMBLED.

S-6

IRONSITES® SERIES TREE GUARD

COPYRIGHT 2003 VICTOR STANLEY, INC. ALL RIGHTS RESERVED

REV. 8/12/03 DRAWN L.K.P.

SECTION 129300 (02870)
SITE FURNISHINGS

PART 1 GENERAL
Model: S-6

1.1 DESCRIPTION
- A. Section includes information, materials, and options for products manufactured by Victor Stanley, Inc. All specifications are subject to change. Contact manufacturer for details.

1.2 SUBMITTALS
- A. Specifications Drawing: Detail drawing of product including overall dimensions and options.
- B. Samples: Various component samples available upon request.
- C. Qualifications: Installer must submit evidence of a successful installation history with comparable materials and designs specified.

1.3 DELIVERY, STORAGE, and HANDLING
- A. Delivery: Deliver products to site in manufacturer's original, unopened containers and packaging. Upon delivery, examine packages immediately to ensure all products are complete and undamaged.
- B. Storage: Store products in a protected, dry area in manufacturer's unopened containers and packaging.
- C. Handling: Protect product's finish from damage during handling and installation.

1.4 COORDINATION
- A. Coordinate with site work and other appropriate sections of the specifications to maintain proper provisions of the work specified.
- B. All site furnishings shall be laid out in the field and approved prior to installation.

PART 2 PRODUCTS

2.1 MANUFACTURER
- A. Victor Stanley, Inc.
  P.O. Drawer 330
  Dunkirk, MD 20754 USA
  Toll Free: (800) 368-2573 (USA & Canada)
  Tel: (301) 855-8300 Fax: (410) 257-7579
  E-mail: sales@victorstanley.com
  Web site: http://www.victorstanley.com

2.2 TREE GUARD
- A. Type: Model S-6 from the Ironsites® Series

2.3 MATERIALS

A. 3/8” x 1” (10mm x 25mm) vertical solid steel bars; 1/4” x 2-1/2” (6mm x 64mm) horizontal solid steel bands; 5/8” (16mm) solid steel top ring, 3/8” x 1” (10mm x 25mm) anchor tabs.

OPTIONS

A. Standard colors: VS Bronze, VS Black, VS Green, VS Tavern Square Green, VS Teal, VS Blue, VS Burgundy, VS Red, VS White, VS Gray (custom colors available, including the RAL range.)
B. Custom height and width please specify.

2.4 FINISHES

A. All fabricated metal components are steel shotblasted, etched, phosphatized, preheated, and electrostatically powder-coated with TGIC polyester powder coatings. Products are fully cleaned and pretreated, preheated and coated while hot to fill crevices and build coating film. Coated parts are fully cured to coating manufacturer’s specifications. The thickness of the resulting finish averages 8-10 mils (200-250 microns).
B. In high salt abusive climates, hot-dip galvanizing before powder coating is available. Hot-dip galvanizing is performed for Victor Stanley, Inc. by an experienced qualified firm to which products are shipped for galvanizing. Hot-dip galvanizing includes an aggressive pre-treatment and immersion in a tank of charged liquid zinc at or around 860°F (460°C). The resulting surface is resistant to rust but has some unevenness resulting from the bonding of the zinc to the steel surface. As a result, the powder-coating surface finish over that galvanized surface may exhibit bumps, unevenness, and may not be as smooth as Victor Stanley, Inc.’s standard finish; this uneven and inconsistent finish is normal for hot-dip galvanizing. Most fabricated metal components and castings can be hot-dip galvanized, please contact manufacturer for details.

PART 3 EXECUTION

3.1 INSTALLATION

A. This Victor Stanley, Inc. product must be permanently affixed to the ground. Consult your local codes for regulations.

3.2 PROTECTION

A. Protect products prior to installation by having them remain in the manufacturer’Packaging and container.

P.O. Drawer 330, Dunkirk, MD 20754 1800.368.2575 (USA + Canada) TEL 301.855.8300 FAX 410.257.7570 VICTORSTANLEY.COM

ITEM 1 · 11' LONG SHELTER
RESIDENTIAL / RURAL MODEL

Shelter structure fabricated all in aluminum:
3 1/2"∅ custom post extrusion 6061-T6
3 1/2"∅ custom torsion bars extrusion 6063-T5
3/8" thk machined aluminum plate 6061-T6
Aluminum components of shelter received metallic silver #PM211S11 powder coat paint.

Ajustable legs for leveling in galvanised steel. All fasteners to be stainless steel or hot dipped galvanized structural bolts A325.

3/8" thk tempered glass panels with silver "CeraFrit" safety strips on rear & sides.

3/16" thk cold form greenish "UV" polycarbonate roof with aluminum trim on front & rear edges

Shelter supplied with following items :

· (1) 6W / 12V MR16 LED lamp c/w (4) batteries controller & 135w solar panel.
Ligthing active until dusk to dawn

· (2) Double seated gray molded plastic benches

NOTE:

· New concrete pad required 84" x 155 1/2" (minimum size)
· Standard rear glass panels
· Non-standard side glass panels

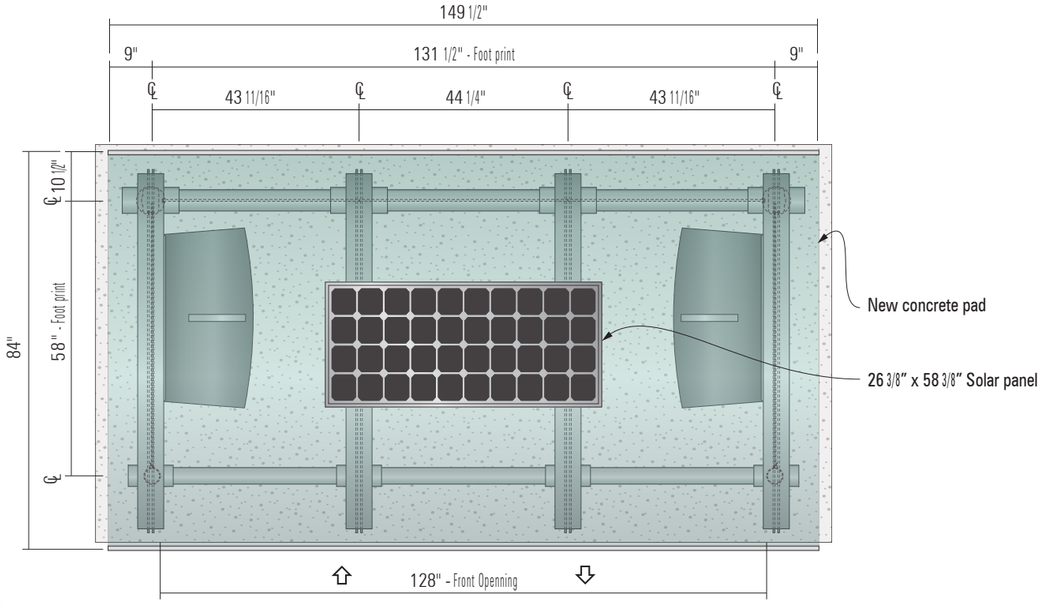

TOP VIEW

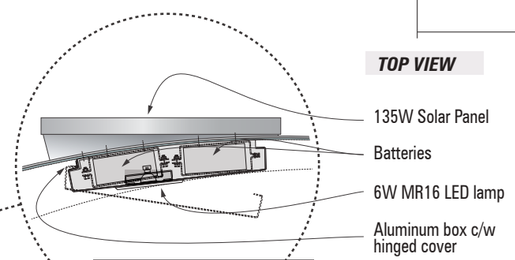

SECTION "A-A" • 3/4" = 1'-0"

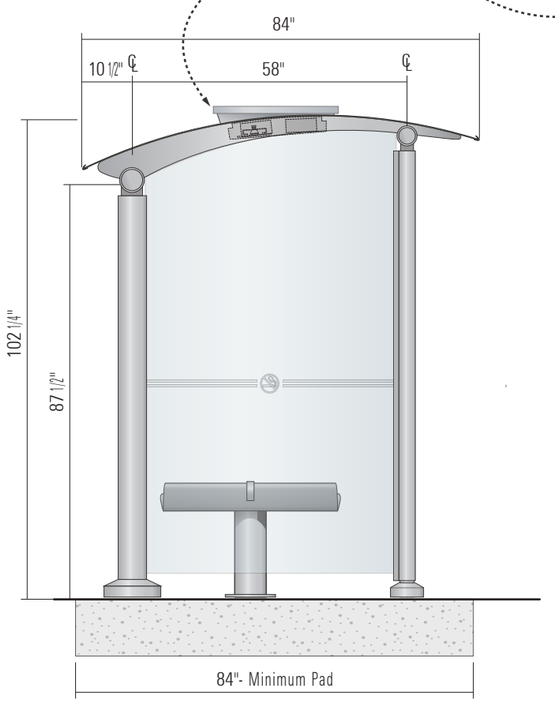

SIDE ELEVATION • *Scale: 3/8" = 1'-0"*

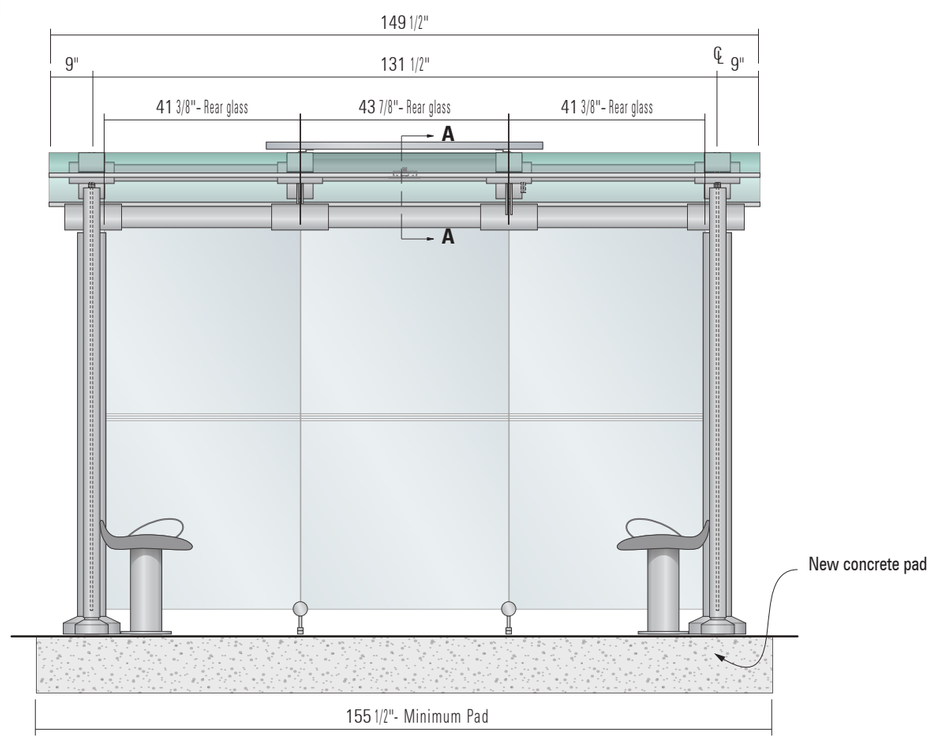

FRONT ELEVATION • *Scale: 3/8" = 1'-0"*

:

QUOTE #	QT12-0294
DRAWING #	D 6752-1-R2
JOB #	J

CLIENT

CLIENT: CCTA
LOCATION: Burlington, Vt.
PROJECT: Residential & Rural Shelter
ACCT. EXECUTIVE: C. Moussis

GRAPHIC LAYOUT

DATE: October 4th, 2012
SCALE: Ind.
DESIGNER: J. Brisebois

REVISIONS

TYPE:	DESIGNER:	DATE:
Std Glass	JB	15-10-12
No front glass	JB	17-10-12

APPROVAL

APPROVED AS IS ☐ APPROVED AS ANNOTATED ☐
CLIENT: x
DATE:
ACCT. EXECUTIVE: x
DATE:

NOTICE

THE DESIGN AND DRAWINGS REMAIN THE PROPERTY OF **ENSEICOM INC.** AND ARE PROTECTED BY LAW. THEY MAY NOT BE ALTERED, ISSUED, OR REPRODUCED WITHOUT EXPRESSED WRITTEN CONSENT FROM **ENSEICOM**.
ALL DOCUMENTS TO BE RETURNED TO ENSEICOM AT COMPLETION OF WORK. CONTRACTOR TO SITE VERIFY ALL DETAILS AND DIMENSIONS AND REPORT ANY AND ALL DISCREPANCIES TO **ENSEICOM** BEFORE COMMENCING WITH THAT RELATED PORTION OF THE WORK.
ONLY SIGNED, SEALED AND STAMPED DOCUMENTS ARE TO BE USED FOR CONSTRUCTION PURPOSES.

enseicom
www.ensei.com • info@ensei.com
225 NORMAN St, LACHINE, QUEBEC CANADA H8R-1A3
T 1.800.663.0673 • T 514.486.2626 • F 514.486.6465

ITEM 2 · 8' LONG SHELTER
RESIDENTIAL / RURAL MODEL

Shelter structure fabricated all in aluminum:
3 1/2"∅ custom post extrusion 6061-T6
3 1/2"∅ custom torsion bars extrusion 6063-T5
3/8" thk machined aluminum plate 6061-T6
Aluminum components of shelter received metallic silver #PM211S11 powder coat paint.

Ajustable legs for leveling in galvanised steel. All fasteners to be stainless steel or hot dipped galvanized structural bolts A325.

3/8" thk tempered glass panels with silver "CeraFrit" safety strips on rear & sides.

3/16" thk cold form greenish "UV" polycarbonate roof with aluminum trim on front & rear edges

Shelter supplied with following items :
· (1) 6W / 12V MR16 LED lamp c/w (4) batteries controller & 135w solar panel.
Ligthing active until dusk to dawn
· (1) Double seated gray molded plastic benches

NOTE:
· New concrete pad required 84" x 116 1/2" (minimum size)
· Standard rear glass panels
· Non-standard side glass panels

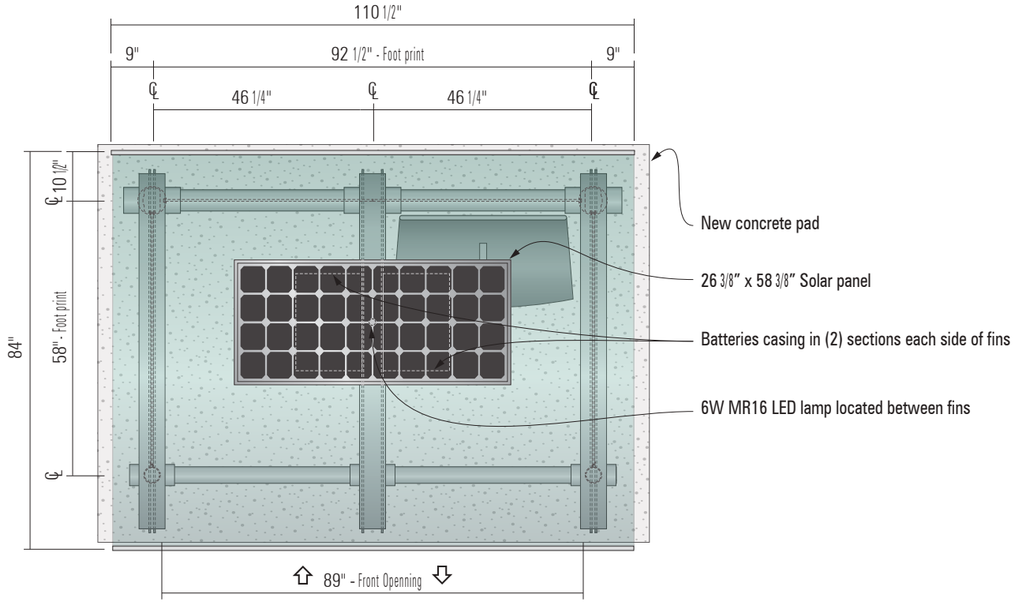

TOP VIEW

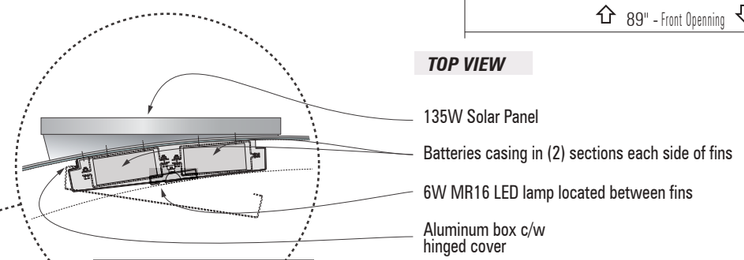

SECTION "A-A" • 3/4" = 1'-0"

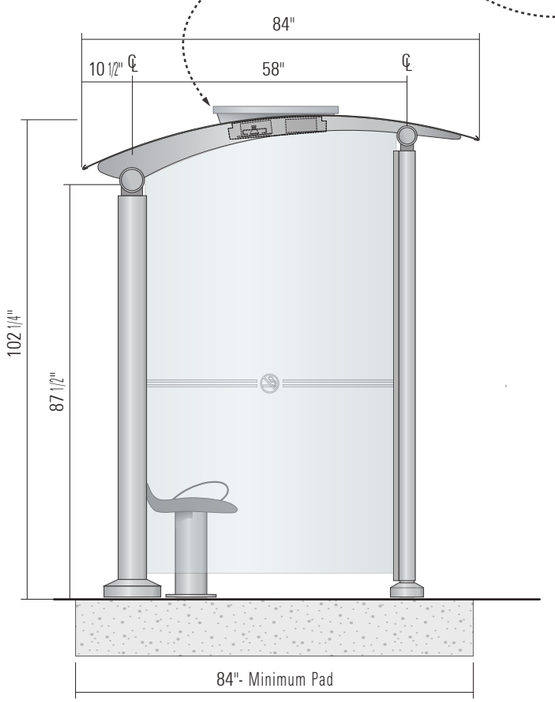

SIDE ELEVATION • *Scale: 3/8" = 1'-0"*

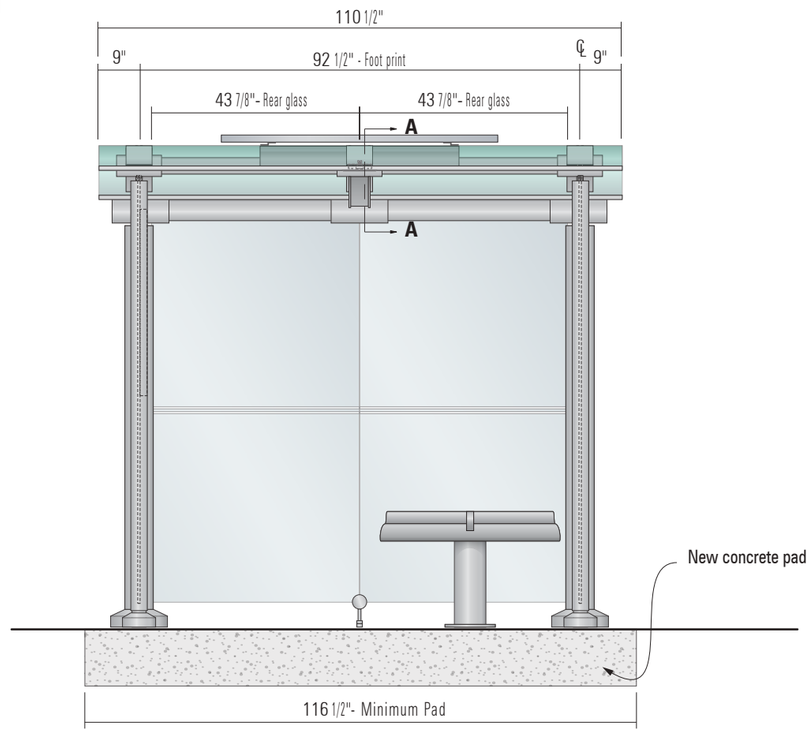

FRONT ELEVATION • *Scale: 3/8" = 1'-0"*

QUOTE # QT**12-0294**

DRAWING # D **6752**-2-R2

JOB # J

CLIENT

CLIENT: *CCTA*
LOCATION: *Burlington, Vt.*
PROJECT: *Residential & Rural Shelter*
ACCT. EXECUTIVE: *C. Moussis*

GRAPHIC LAYOUT

DATE: *October 4th, 2012*
SCALE: *Ind.*
DESIGNER: *J. Brisebois*

REVISIONS

TYPE:	DESIGNER:	DATE:
Std Glass	*JB*	*15-10-12*
No front glass	*JB*	*17-10-12*

APPROVAL

APPROVED AS IS ☐ APPROVED AS ANNOTATED ☐
CLIENT: x
DATE:
ACCT. EXECUTIVE: x
DATE:

NOTICE

THE DESIGN AND DRAWINGS REMAIN THE PROPERTY OF **ENSEICOM INC.** AND ARE PROTECTED BY LAW. THEY MAY NOT BE ALTERED, ISSUED, OR REPRODUCED WITHOUT EXPRESSED WRITTEN CONSENT FROM **ENSEICOM**.
ALL DOCUMENTS TO BE RETURNED TO ENSEICOM AT COMPLETION OF WORK. CONTRACTOR TO SITE VERIFY ALL DETAILS AND DIMENSIONS AND REPORT ANY AND ALL DISCREPANCIES TO **ENSEICOM** BEFORE COMMENCING WITH THAT RELATED PORTION OF THE WORK.
ONLY SIGNED, SEALED AND STAMPED DOCUMENTS ARE TO BE USED FOR CONSTRUCTION PURPOSES.

enseicom
www.ensei.com • info@ensei.com
225 NORMAN St, LACHINE, QUEBEC CANADA H8R-1A3
T 1.800.663.0673 • T 514.486.2626 • F 514.486.6465

MODEL S 080 CANTILEVER SHELTER
SOLAR POWERED SECURITY LIGHT

Shelter structure fabricated all in aluminum:
6" ∅ custom post extrusion 6061-T6
3 1/2" & 4 1/2" ∅ custom torsion bars extrusion 6063-T5
3/8" thk machined aluminum plate 6061-T6
Aluminum components of shelter received metallic silver #PM211S11 powder coat paint.

3/8" thk tempered glass panels with silver "CeraFrit" safety strips on rear & sides.

3/8" thk laminated & heat-strenghted glass roof.

Shelter supplied with following items :

- (1) 12V - 6 W LED cluster fixture c/w (4) batteries, controller & 135W solar panel (5 days of autonomy).
- (4) Double seated gray molded plastic bench
- (1) 39 5/16" x 33 5/16" D/F map frame with tempered glass face for 36" x 36" visual.
- (2) Aluminum bollard c/w (2) 3M white reflective vinyle stripes.
  Bollard position to be determined on site by customer

NOTE:

- New concrete pad required 84" x 283" (minimum size).
- Standard rear glass panels 41 3/8" x 81 1/16"
- Non-standard side glass panels.

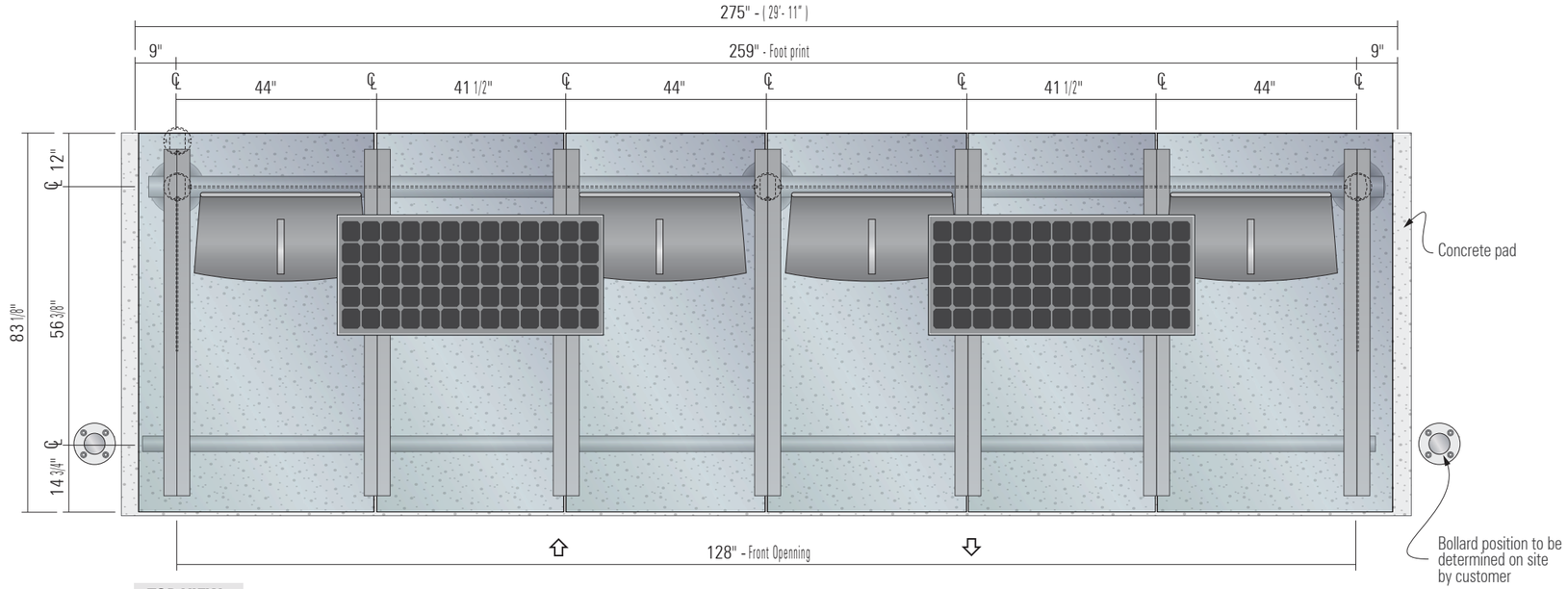

TOP VIEW

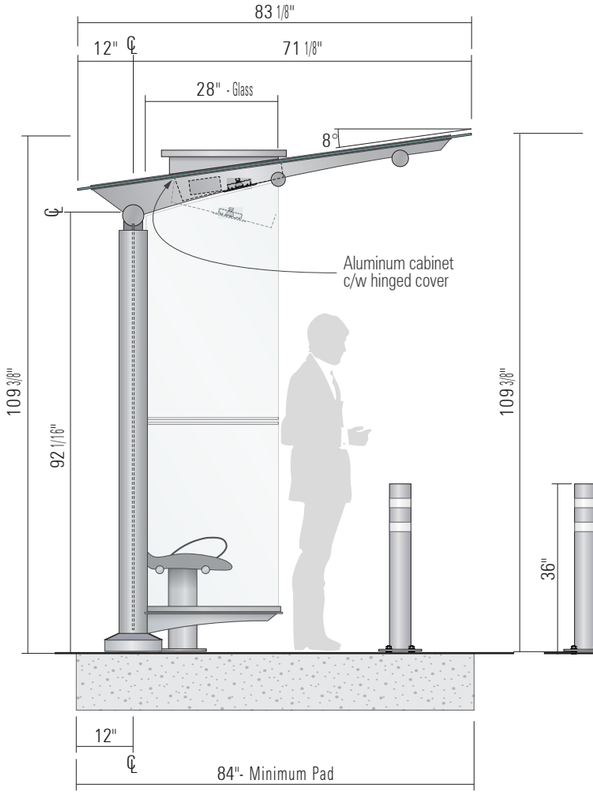

LEFT ELEVATION • *Scale: 3/8" = 1'-0"*

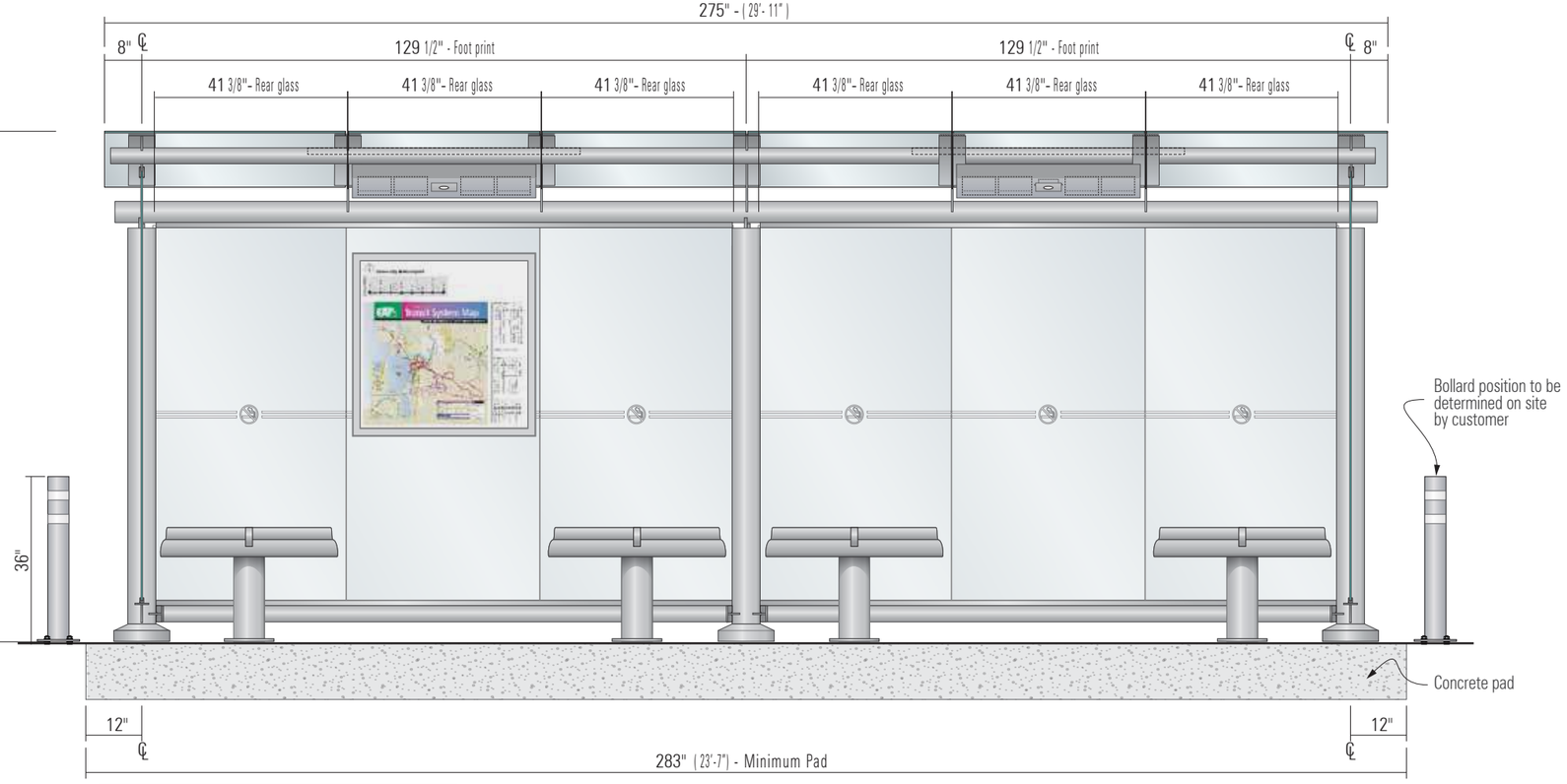

FRONT ELEVATION • *Scale: 3/8" = 1'-0"*

Q	**QT** 14-0072-A
D	**D** 7102-2-R1
J	**J** 0000
CLIENT:	CCTA
LOCATION:	Burlington, Vt.
PROJECT:	Shelter S 080
ACCOUNT EXECUTIVE:	JP Chauvin
DATE:	2015, March 26th,
SCALE:	Ind.
DESIGNER:	J. Brisebois
REVISION:	

28" side glass	1	JB	2015/03/30
	2		
	3		
	4		
	5		
	6		
	7		
	8		
	9		

THE DESIGN AND DRAWINGS REMAIN THE PROPERTY OF **ENSEICOM INC.** AND ARE PROTECTED BY LAW. THEY MAY NOT BE ALTERED, ISSUED, OR REPRODUCED WITHOUT EXPRESSED WRITTEN CONSENT FROM **ENSEICOM INC.**
ALL DOCUMENTS TO BE RETURNED TO **ENSEICOM** AT COMPLETION OF WORK. CONTRACTOR TO SITE VERIFY ALL DETAILS AND DIMENSIONS AND REPORT ANY AND ALL DISCREPANCIES TO **ENSEICOM** BEFORE COMMENCING WITH THAT RELATED PORTION OF THE WORK.
ONLY SIGNED, SEALED AND STAMPED DOCUMENTS ARE TO BE USED FOR CONSTRUCTION PURPOSES.

enseicom
514·486·2626 800·663·0673
225, Norman Montréal
Québec Canada H8R 1A3

Height Limitation for Mounting Single-Space Meters

- Installation Guide

100-022 Rev. A

IPS Group Confidential and Proprietary

IPS Group, Incorporated ("IPS") has made an effort to provide pertinent and relevant information in this manual. In doing so, we are providing valuable and protected information, including ideas and concepts that IPS considers to be confidential. Release of IPS confidential information may cause irreparable harm to IPS by publically disclosing such information that is not publically known. IPS respectfully requests the right to be notified and provided an opportunity to redact such confidential information in the event of any third-party request for public disclosure.

IPS, IPS GROUP, and other IPS-owned marks are trademarks and/or registered trademarks of IPS Group, Incorporated in the United States, and may be registered in other countries. IPS reserves all rights to the IPS copyright materials contained herein.

Copyright © 2016 IPS Group, Incorporated.
All rights reserved.
5601 Oberlin Drive, Suite 100 | San Diego, CA 92121
858.568.7648 | support@ipsgroupinc.com
www.ipsgroupinc.com | www2.ipsmetersystems.com

REVISION HISTORY

Revision	Date	Description
A	March 2016	Initial release

TABLE OF CONTENTS

CHAPTER 1 | Introduction 5
1.1 ADA regulation 5
CHAPTER 2 | Maximum Pole-Height Limitation 6
2.1 Pole height by application 6

FIGURES

Figure 1-1: ADA, Section 308.2.1 – Unobstructed forward reach requirement 5
Figure 2-1: Single-Space Meter Yoke 6
Figure 2-2: Single-Space meter + small vault 7
Figure 2-3: Single-Space meter + large vault 7
Figure 2-4: Single-Space meter + small vault + Yoke 8
Figure 2-5: Single-Space meter + large vault + Yoke 8

TABLES

Table 2-1: Approximate total assembly heights 6

CHAPTER 1 | INTRODUCTION

This document details the maximum mounting-pole height limitations for mounting an IPS Group Inc.'s Single-Space parking meter. Specifically it provides maximum mounting-pole height measurements to use when mounting each of the following total assemblies:

- Single-Space with small vault
- Single-Space with large vault
- Yoke mounted with small vault
- Yoke mounted with large vault

1.1 ADA regulation

The Americans with Disabilities Act (ADA), Section 308.2.1 (Forward reach, Unobstructed. Revised in 2010), states the maximum height for a parking meter's control panel is 48 inches (or 4 feet) above ground. Therefore regardless of the height of the total assembly, the mounting-pole's height must be reduced enough to ensure the meter's control panel does not exceed 48 in.

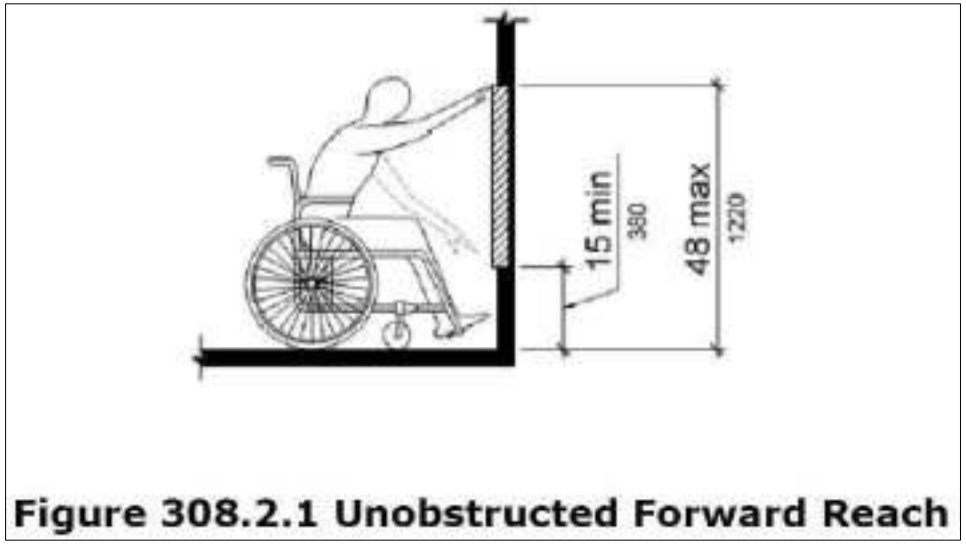

Figure 1-1: ADA, Section 308.2.1 – Unobstructed forward reach requirement

CHAPTER 2 | MAXIMUM POLE-HEIGHT LIMITATION

IPS Single-Space parking meters vary in height, depending on the coin vault being used. This coin vault height can dictate the maximum mounting-pole height allowable during installation (i.e. meter + vault). Additionally, the use of an IPS Single-Space Meter Yoke adds to the overall height of the total assembly (i.e. meter + vault + Yoke). Therefore, depending on the specific application, a mounting-pole's height must be reduced enough to ensure the installation satisfies ADA requirements.

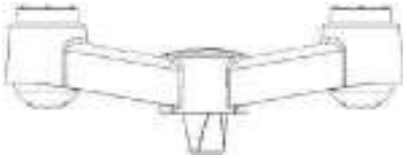

Figure 2-1: Single-Space Meter Yoke

2.1 Pole height by application

Table 2-1 lists the approximate total assembly height of specific applications. Figure 2-2 thru Figure 2-5 show the maximum mounting-pole height allowable for each application.

Note = 48 in. is the maximum allowable height. Therefore, reduce/cut the mounting-pole ~1 in. more than the indicated height to ensure the final height is below 48 in. There is no penalty for a control panel height from 15 in. – 48 in.

Table 2-1: Approximate total assembly heights

Single-Space application	Application height, approx. (in.)	ADA height req. – Application height (in.)	Maximum pole height (in.)
SS + small vault	= 14.10 in.	48.00 – 14.10 in. =	33.90 in.
SS + large vault	= 16.00 in.	48.00 – 16.00 in. =	32.00 in.
SS +small vault + Yoke	= 17.50 in.	48.00 – 17.50 in. =	30.50 in.
SS + large vault + Yoke	= 19.10 in.	48.00 – 19.10 in. =	28.90 in.

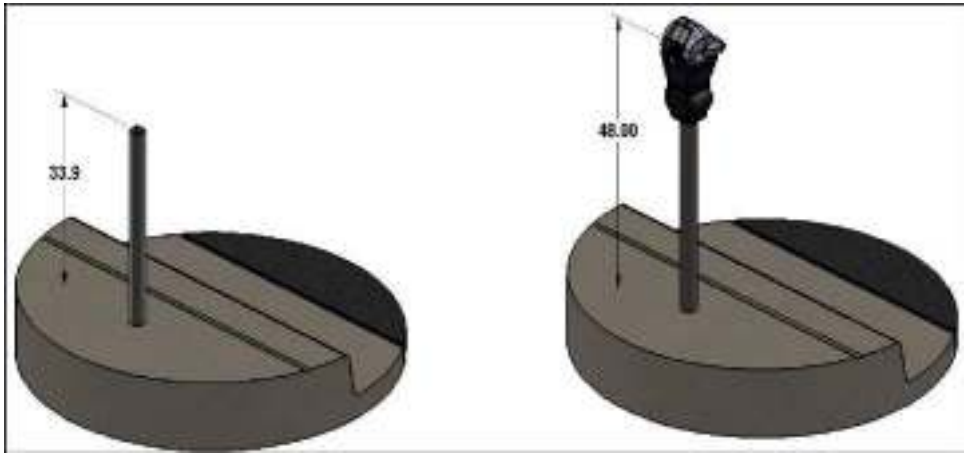

Figure 2-2: Single-Space meter + small vault

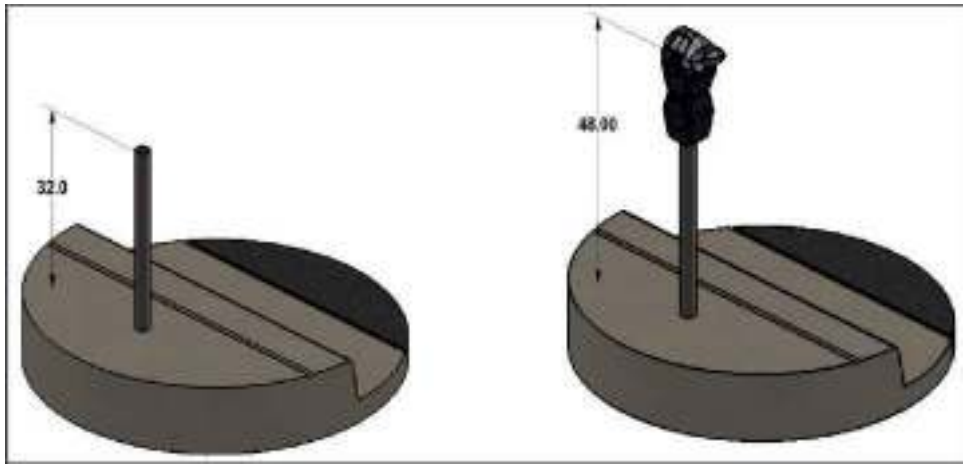

Figure 2-3: Single-Space meter + large vault

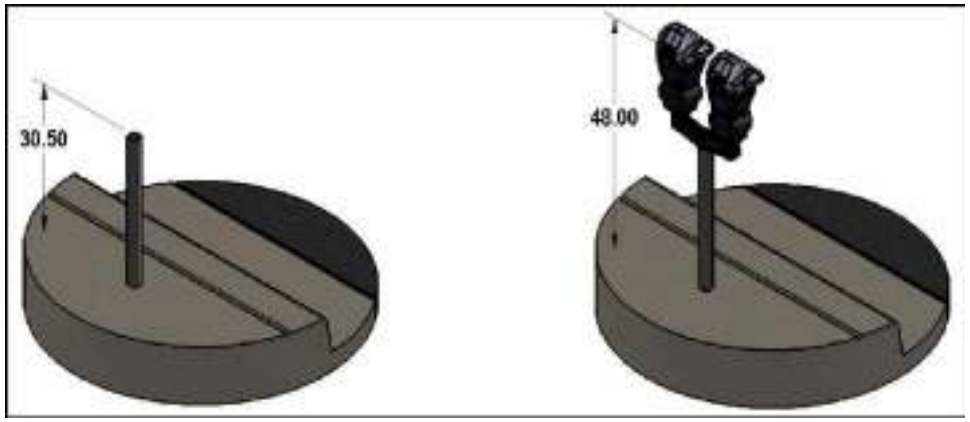

Figure 2-4: Single-Space meter + small vault + Yoke

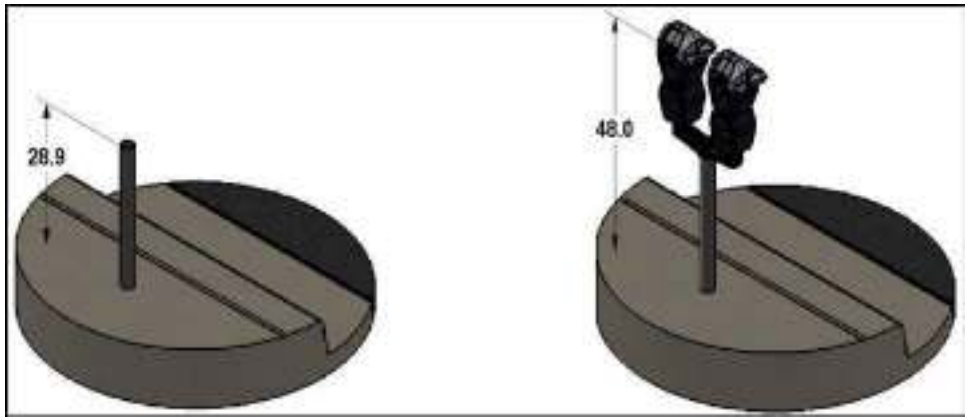

Figure 2-5: Single-Space meter + large vault + Yoke

ADA CERTIFICATION

The MS1 Multi-Space Pay Station and M5™ Single Space Parking Meter are compliant with the Federal Americans with Disabilities Act (ADA).

-The pay station screen is positioned at a height of 45”

-IPS meters are ADA compliant as long as the meter poles are cut to the appropriate heights.

ADA - “The force required to activate operable parts shall be 5 pounds (22.2 N) maximum.”

The MS1 and M5™ key buttons complies with this requirement. The force to operate the key buttons is typically equal or less than one pound.

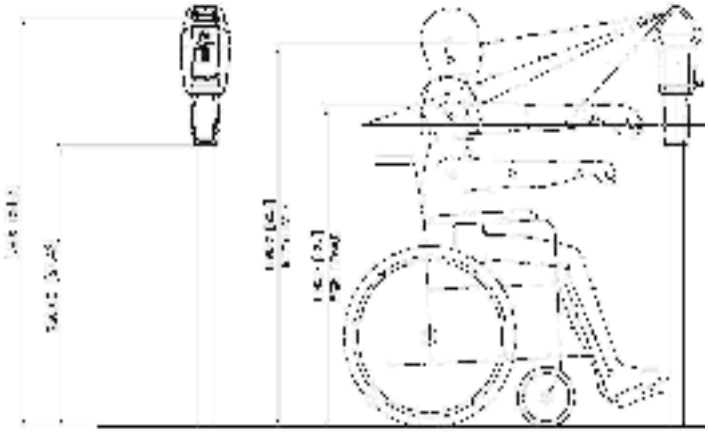

Wheelchair accessible IPS meters in the City of Columbus, OH

© 2015 IPS Group, Inc. All Rights Reserved

QUICK AND EASY TO INSTALL

Step 1: Unlock the Meter.

Step 2: Remove the Dome and Mechanism.

Step 3: Install RFID tag.

Step 4: Install IPS Dome and Mechanism.

Step 5: Lock the Meter.

Step 6: Install complete.

Note:- ½" holes to be drilled into one side (not through) pipe at Points A & B to release any water build-up and create air circulation.

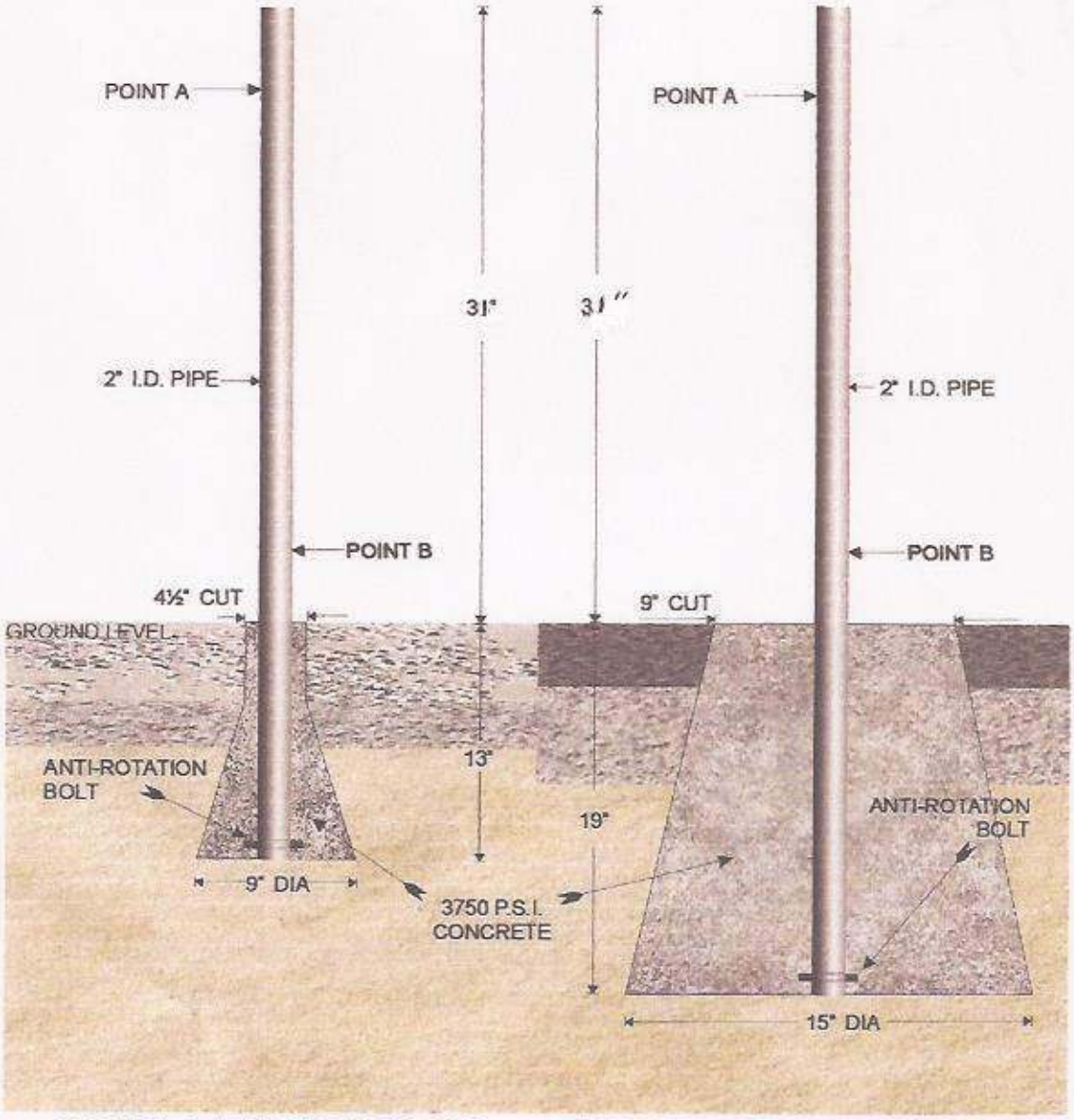

CONCRETE SIDEWALK BOULEVARD or ASPHALT

Schedule 40 Galvanize Pole 2" I.D. 2 5/8" O.D.

Note:- ½" holes to be drilled into (<u>not through</u>) pipe at Points A & B to release any water build-up and create air circulation.

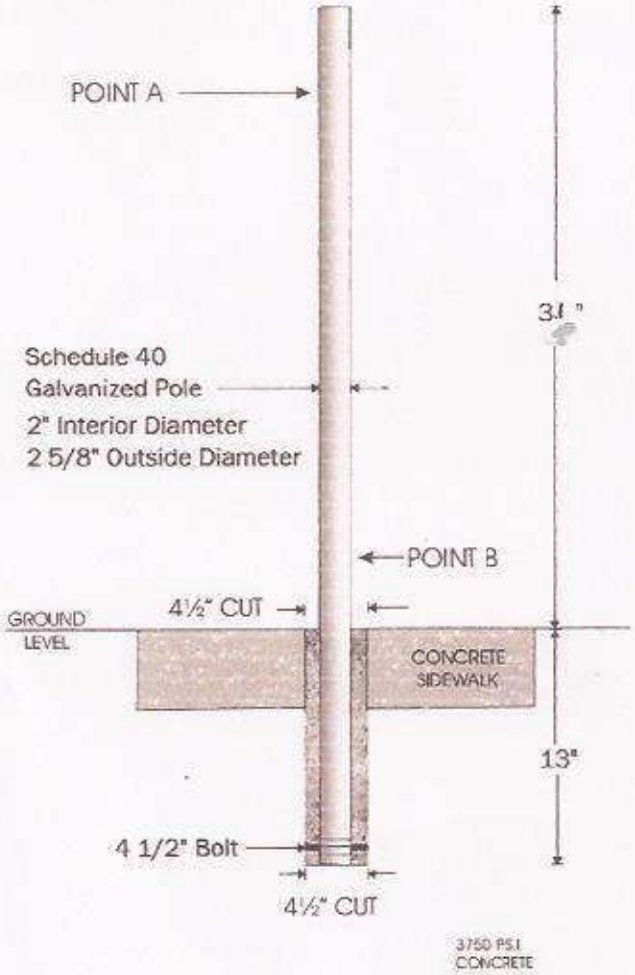

CONCRETE SIDEWALK

Schedule 40 Galvanize Pole 2" I.D. 2 5/8" O.D.

Note:- ½" holes to be drilled into (not through) pipe at Points A & B to release any water build-up and create air circulation.

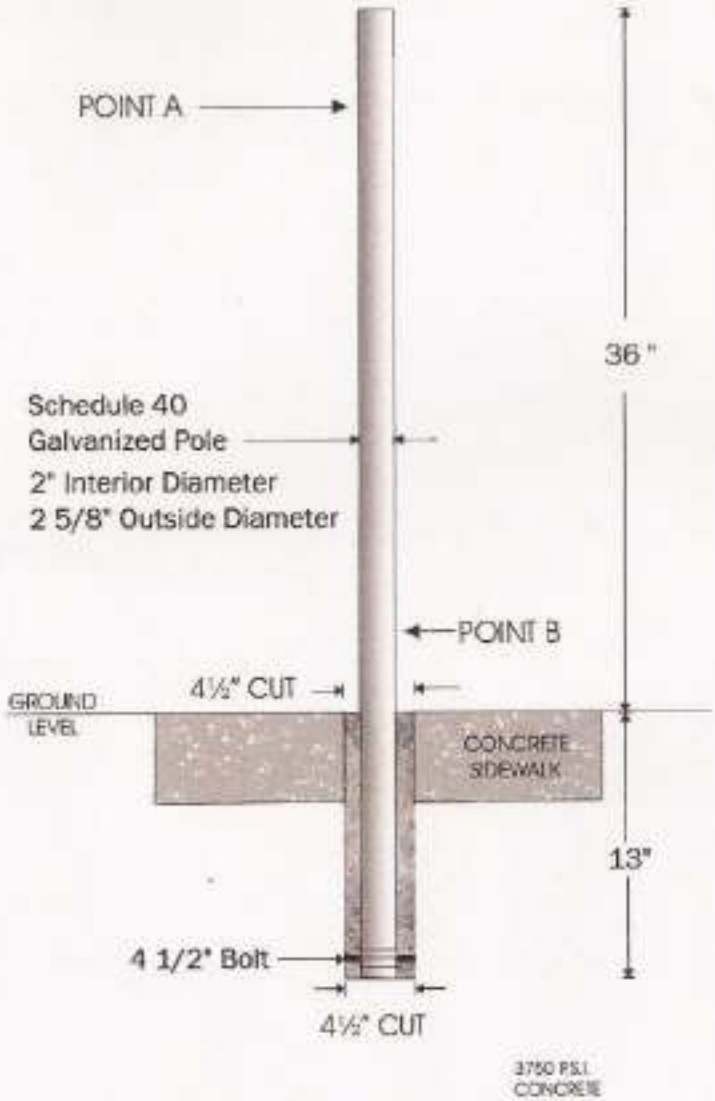

CONCRETE SIDEWALK

Signage & Wayfinding

PROPOSED IMPROVEMENTS
BURLINGTON WAYFINDING IMPROVEMENTS
CITY OF BURLINGTON
COUNTY OF CHITTENDEN

INDEX OF SHEETS

GENERAL:

G0.0	TITLE SHEET
G1.1	EXISTING CONDITIONS SIGN LOCATIONS
G2.1	PROPOSED HAIRPIN SIGN LOCATIONS
G3.1	PROPOSED PARKING AND PEDESTRIAN SIGN LOCATIONS
TSSS 1-9	TRAFFIC SIGN SUMMARY SHEETS

WAYFINDING SPECIFICATIONS SHEETS

1.1 - 1.3	SIGN TYPE H
2	SIGN TYPE S
3	LED PARKING SIGNS
4	MARKETPLACE GARAGE
5	COLLEGE STREET GARAGE
6	LAKEVIEW GARAGE
7.1 - 7.2	SIGN TYPE PW
8	PICTOGRAMS
9.1 - 9.2	FOUNDATIONS AND FOOTINGS DETAILS

PROJECT LOCATION: VARIOUS LOCATIONS THROUGHOUT THE CITY OF BURLINGTON, VERMONT

PROJECT DESCRIPTION: FABRICATION AND INSTALLATION OF VARIOUS WAYFINDING SIGNS AND STRUCTURES

LENGTH OF PROJECT: NOT APPLICABLE

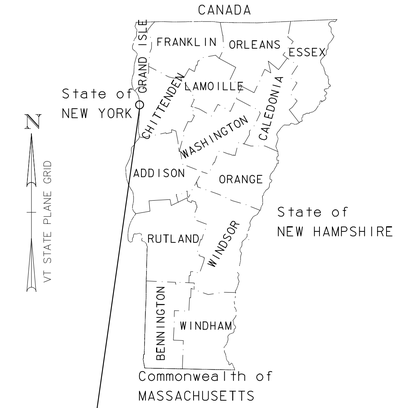

PROJECT LOCATION
BURLINGTON WAYFINDING IMPROVEMENTS
STP 5000(17)

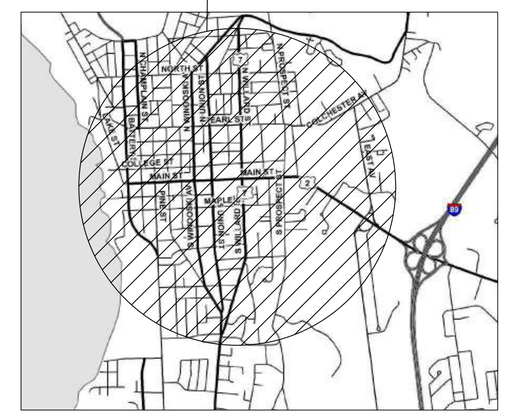

VERMONT AGENCY OF TRANSPORTATION CONSTRUCTION STANDARDS

NAME	DESCRIPTION	ENGLISH
E-121	STANDARD SIGN PLACEMENT - CONVENTIONAL ROAD	8/8/1995
E-161	W-SHAPED STEEL SIGN POST	8/18/1995
E-162	TUBULAR ALUMINUM SIGN POST	5/20/1999
E-163	TUBULAR STEEL SIGN POST	5/20/1999
E-164	SQUARE STEEL SIGN POST	6/8/2009
T-1	TRAFFIC CONTROL GENERAL NOTES CONVENTIONAL ROADS CONSTRUCTION APPROACH	8/6/2012
T-10	SIGNING	8/6/2012
T-28	CONSTRUCTION SIGN DETAILS	8/6/2012
T-29	CONSTRUCTION SIGN DETAILS	8/6/2012
T-30	CONSTRUCTION SIGN DETAILS	8/6/2012
T-31	CONSTRUCTION SIGN DETAILS	8/6/2012
T-33	MISCELLANEOUS SIGN DETAILS	8/6/2012
T-45	SQUARE TUBE SIGN POST AND ANCHOR	1/2/2013

PLANS PREPARED BY:

RSG LandWorks

CONVENTIONAL SYMBOLS

COUNTY LINE
TOWN LINE
LIMITS OF ACCESS
POINT OF ACCESS
FENCE LINE
STONE WALL
TRAVELED WAY
GUARD RAIL
RAILROAD
SURVEY LINE
CULVERT
POWER POLE
TELEPHONE POLE
TREES
WETLANDS
6(f) PROPERTY
CONTROL OF ACCESS
PROPERTY LINE
SLOPE RIGHTS
TOP OF CUT
TOE OF SLOPE

THESE PLANS ARE SUBJECT TO SUCH ENGINEERING CHANGES AS MAY BE REQUIRED BY THE FEDERAL HIGHWAY ADMINISTRATION OR THE DIRECTOR OF PROGRAM DEVELOPMENT.

CONSTRUCTION IS TO BE CARRIED ON IN ACCORDANCE WITH THESE PLANS AND THE STANDARD SPECIFICATIONS FOR CONSTRUCTION DATED 2011, AS APPROVED BY THE FEDERAL HIGHWAY ADMINISTRATION ON JULY 20, 2011 FOR USE ON THIS PROJECT, INCLUDING ALL SUBSEQUENT REVISIONS AND SUCH REVISED SPECIFICATIONS AND SPECIAL PROVISIONS AS ARE INCORPORATED IN THESE PLANS.

CONTRACT (100%) PLANS
JUNE 2014

CITY OF BURLINGTON
DIRECTOR OF PUBLIC WORKS
APPROVED _____ DATE _____

PROJECT NAME: WATERFRONT N. ACCESS
PROJECT NUMBERS: STP 5000 (17)
SHEET G0.0

Notes:
1. Contractor shall remove and dispose of all existing hairpin and directional signs.

A.1 EXISTING CONDITIONS MAP

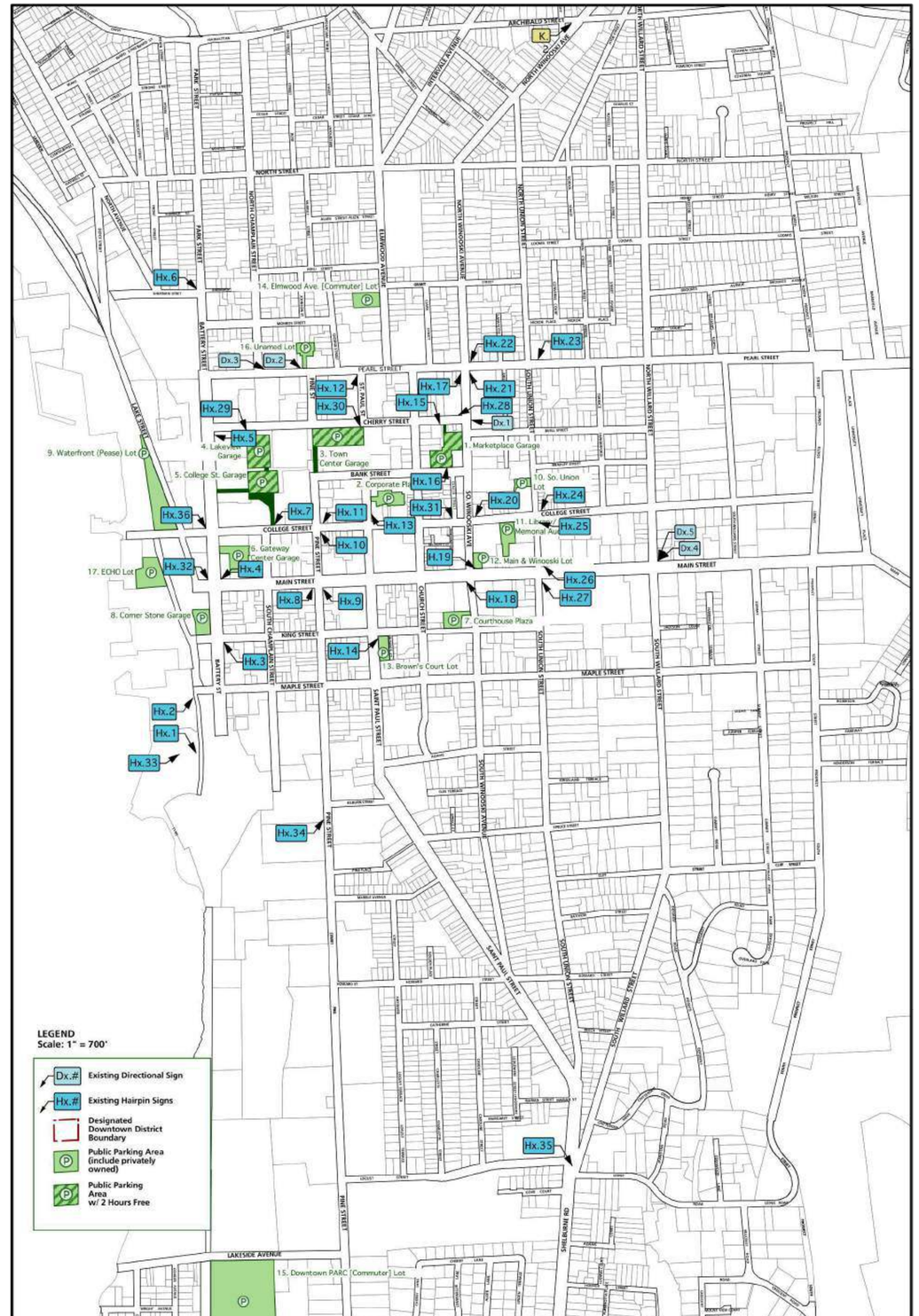

Burlington

BURLINGTON WAYFINDING IMPROVEMENTS
STP 5000 (17)
BURLINGTON, VERMONT

CITY OF BURLINGTON
Community & Economic Development Office
Burlington City Hall
149 Church Street
Burlington, VT 05401
Ph: (802) 865-7144

Department of Public Works
PO Box 649
Burlington, VT 05402
Ph: (802) 863-9094

VT AGENCY OF TRANSPORTATION
Local Transportation Facilities
National Life Building, Drawer 33
Montpelier, VT 05633

FEDERAL HIGHWAY ADMINISTRATION
P. O. Box 568
Montpelier, VT 05601-0568

DESIGN TEAM

LandWorks
228 Maple St., Suite 32
Middlebury, VT 05753
802.388.3011

Resource Systems Group
55 Railroad Row
White River Junction, VT 05001
802.295.4999

REVISIONS

DATE	DESCRIPTION	BY

WAYFINDING SIGNS
EXISTING CONDITIONS
SIGN LOCATIONS

SCALE:	N.T.S.	SHEET
DESIGNED BY:	DJG	G1.1
DRAWN BY:	CDM	
CHECKED BY:	DJG	
DATE:	06/20/14	
PROJ. NO.:	STP5000(17)	

PROPOSED HAIRPIN SIGN LOCATIONS (Sheet 1 of 2)

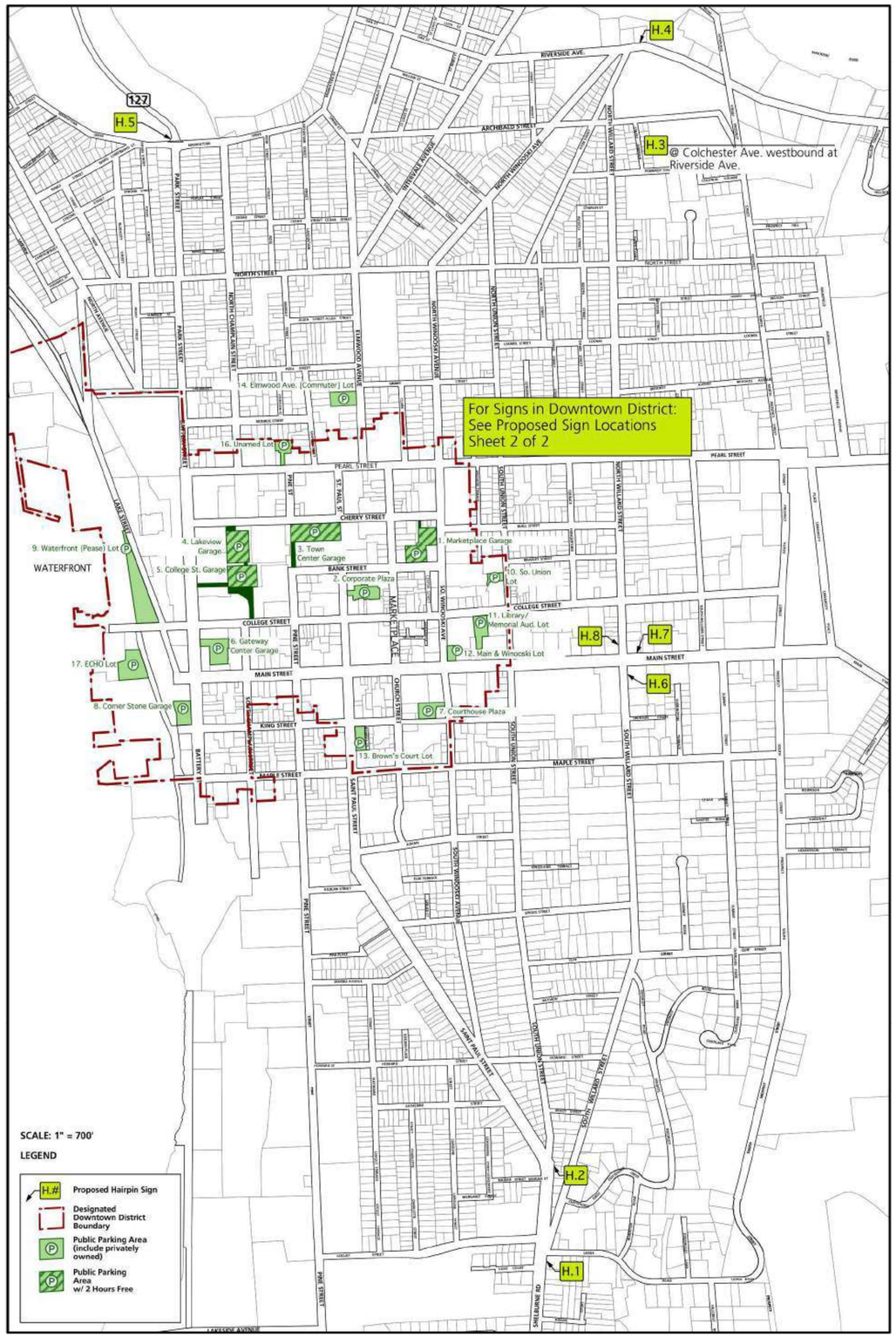

PROPOSED HAIRPIN SIGN LOCATIONS (Sheet 2 of 2)

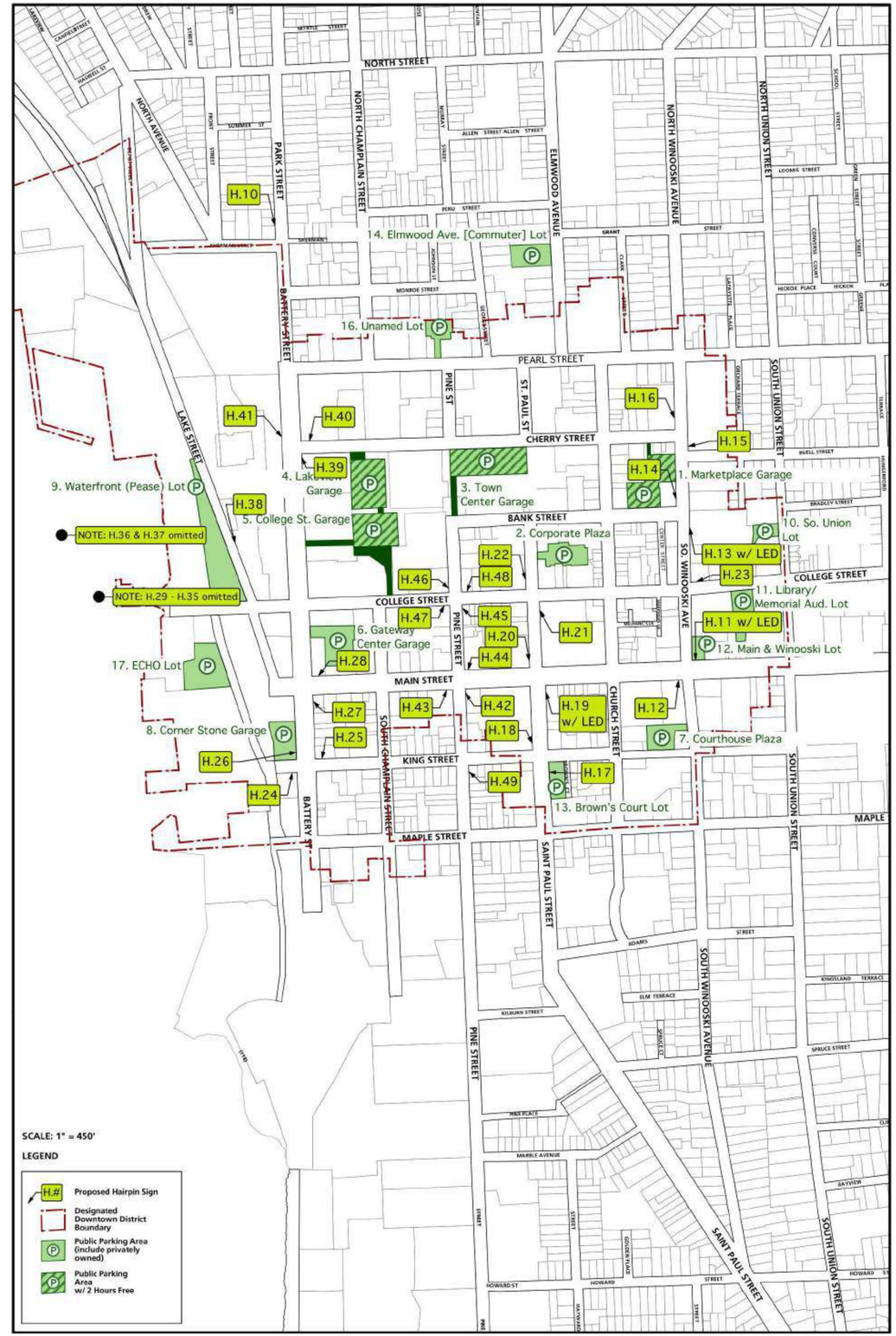

Burlington

BURLINGTON WAYFINDING IMPROVEMENTS
STP 5000 (17)
BURLINGTON, VERMONT

CITY OF BURLINGTON
Community & Economic Development Office
Burlington City Hall
149 Church Street
Burlington, VT 05401
Ph: (802) 865-7144

Department of Public Works
PO Box 649
Burlington, VT 05402
Ph: (802) 863-9094

VT AGENCY OF TRANSPORTATION
Local Transportation Facilities
National Life Building, Drawer 33
Montpelier, VT 05633

FEDERAL HIGHWAY ADMINISTRATION
P. O. Box 568
Montpelier, VT 05601-0568

DESIGN TEAM

LandWorks
228 Maple St., Suite 32
Middlebury, VT 05753
802.388.3011

Resource Systems Group
55 Railroad Row
White River Junction, VT 05001
802.295.4999

REVISIONS

DATE	DESCRIPTION	BY

WAYFINDING SIGNS
PROPOSED HAIRPIN
SIGN LOCATIONS

SCALE:	N. T. S.	SHEET
DESIGNED BY:	DJG	G2.1
DRAWN BY:	CDM	
CHECKED BY:	DJG	
DATE:	06/20/14	
PROJ. NO.:	STP5000 (17)	

PROPOSED PARKING FACILITY and SMALL DIRECTIONAL SIGN LOCATIONS (Sheet 1 of 1)

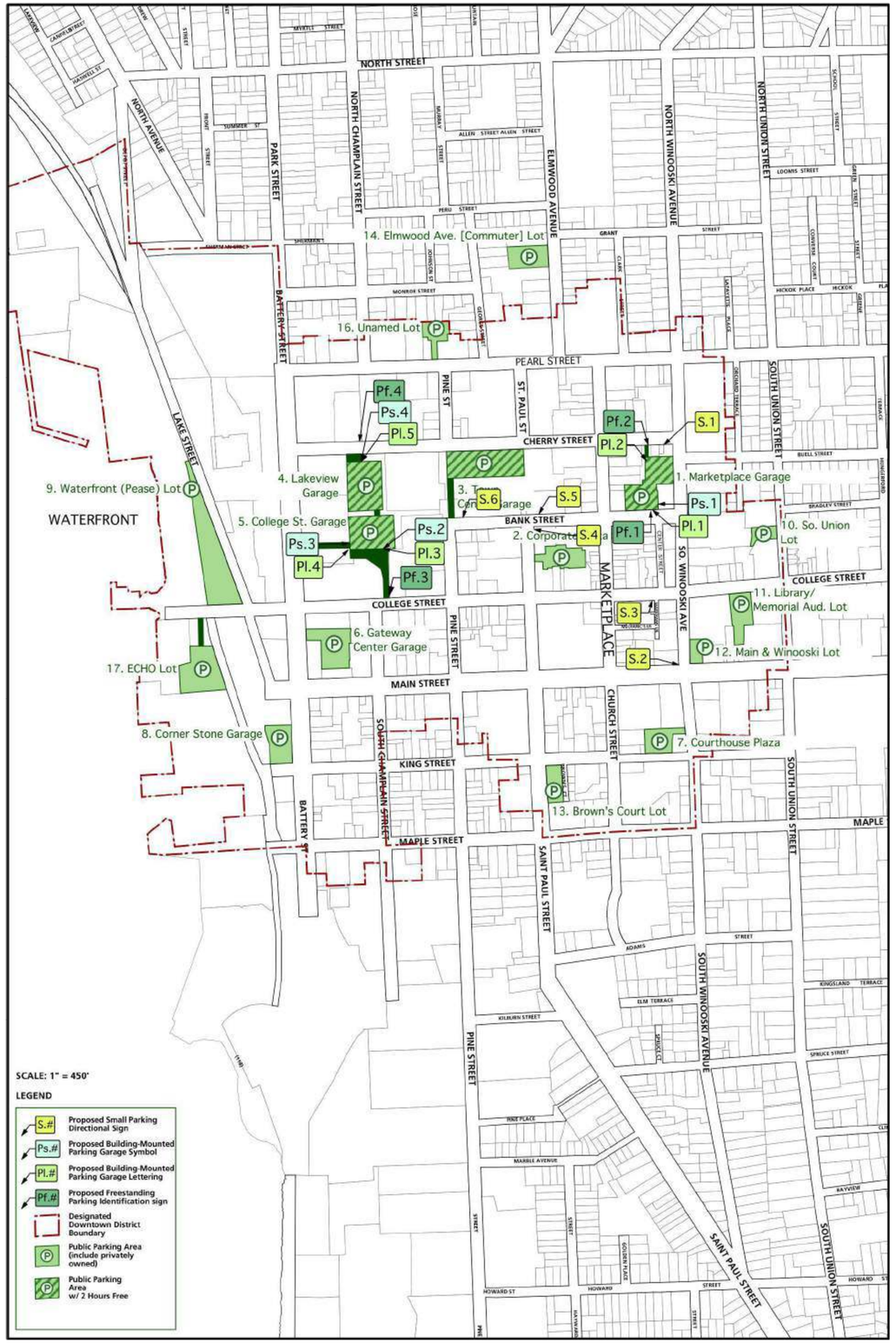

PROPOSED PEDESTRIAN WAYFINDING SIGN LOCATIONS (Sheet 1 of 1)

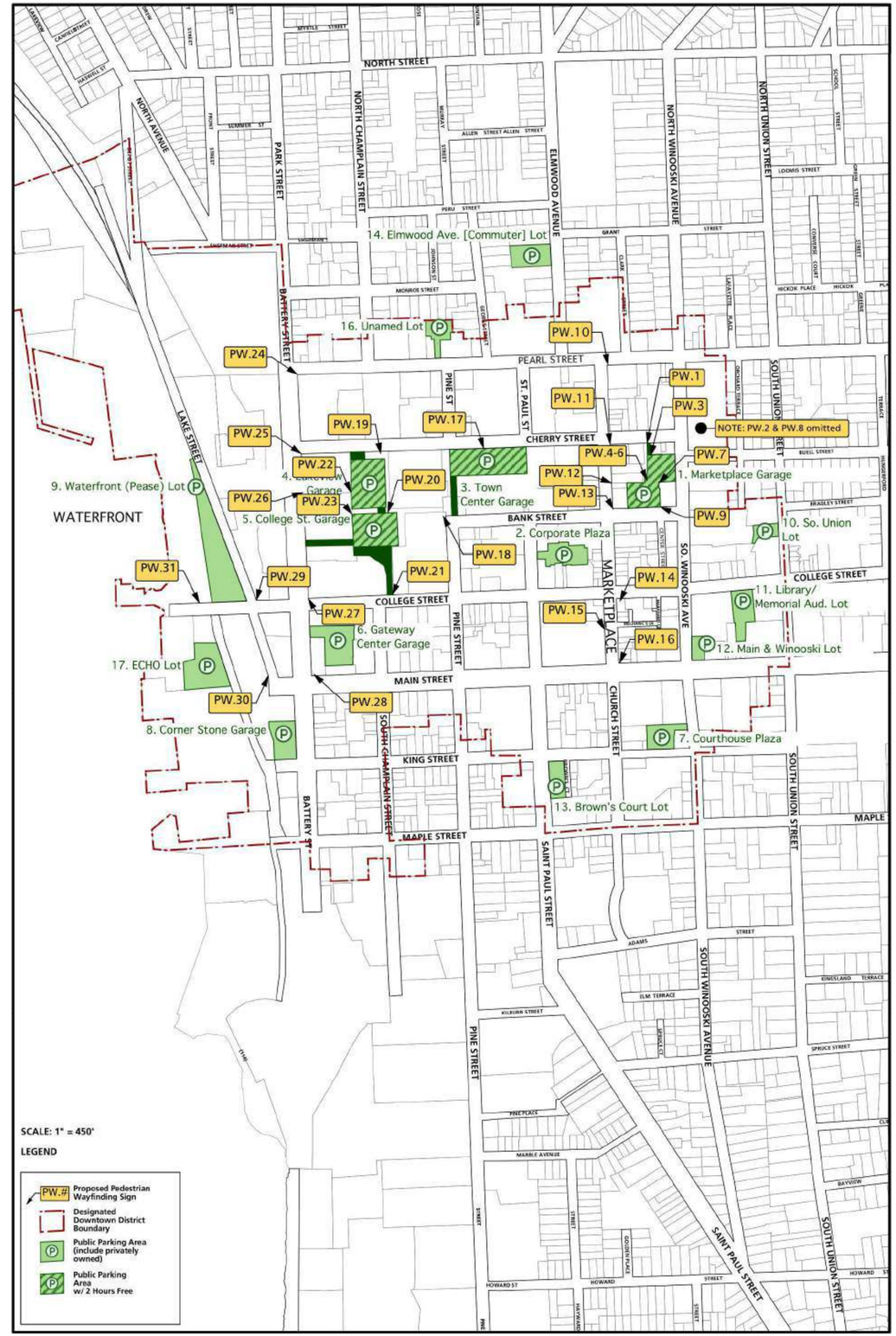

Burlington

BURLINGTON WAYFINDING IMPROVEMENTS
STP 5000 (17)
BURLINGTON, VERMONT

CITY OF BURLINGTON
Community & Economic Development Office
Burlington City Hall
149 Church Street
Burlington, VT 05401
Ph: (802) 865-7144

Department of Public Works
PO Box 649
Burlington, VT 05402
Ph: (802) 863-9094

VT AGENCY OF TRANSPORTATION
Local Transportation Facilities
National Life Building, Drawer 33
Montpelier, VT 05633

FEDERAL HIGHWAY ADMINISTRATION
P. O. Box 568
Montpelier, VT 05601-0568

DESIGN TEAM

LandWorks
228 Maple St., Suite 32
Middlebury, VT 05753
802.388.3011

Resource Systems Group
55 Railroad Row
White River Junction, VT 05001
802.295.4999

REVISIONS

DATE	DESCRIPTION	BY

WAYFINDING SIGNS PROPOSED PARKING AND PEDESTRIAN SIGN LOCATIONS

SCALE:	N. T. S.	SHEET
DESIGNED BY:	DJG	G3.1
DRAWN BY:	CDM	
CHECKED BY:	DJG	
DATE:	06/20/14	
PROJ. NO.:	STP5000 (17)	

TRAFFIC SIGN SUMMARY SHEET 1

Sign Number	Sign Legend	Sign Dimensions EA	Width, in	Height, in	New & Salvages Signs "A"	"B"	Salv Sign	Salv TIS	Exist Post Retain	Salvage	No. of Posts	Flanged Channel lb/ft 1.12	2	3	New Sign Posts Tubular Aluminum (in) 3 lb/ft 1.3	4 lb/ft 1.7	4.0mod 1.7	Found-ation	Tubular Steel (in) 3 lb/ft 7.6	3.5 lb/ft 9	4 lb/ft 10.8	5 lb/ft 14.6	sign frame required	Remarks	Sign Detail Detail on Sheet No.	Std. Sheet Number
	Hairpin Signs																									
H.1	[Downtown Logo] Welcome Bienvenue Downtown ↖ Campus District [campus symbol] ↗	1 1 1 1	30 30 30 30	30 15.5 15.5 21	5.62 3.23 3.23 4.38						2				X			2						Rt. 7/Shelburne Rd. northbound. In advance of intersection with S. Willard St. At "rotary". Remove existing Hx.35		
H.2 south-facing	[Downtown Logo] Waterfront [parking and waterfront symbols] ↖ Church St. Marketplace [shopping & dining symbols] ↖ Memorial Auditorium ↑	1 1 1 1	30 30 30 30	30 15.5 21 21	5.62 3.23 4.38 4.38						2				X			2						Rt. 7/Shelburne Rd. northbound In advance of intersection with Saint Paul St. and So. Union St.		
H.3 east-facing	[Downtown Logo] Welcome Bienvenue Downtown ↑ Intervale District ↗	1 1 1 1	30 30 30 30	30 15.5 15.5 21	5.62 3.23 3.23 4.38						2				X			2						Colchester Ave. westbound. In advance of intersection with Riverside Ave.		
H.4 east-facing	[Old North End Logo] Downtown ←	1 1	30 30	30 15.5	5.62 3.23						2				X			2						Riverside Ave. westbound. In advance of intersection with N. Willard St.		
H.5 north-facing	[Old North End Logo] Welcome Bienvenue Downtown ↑ Waterfront [parking and waterfront symbols]	1 1 1	30 30 30	30 15.5 21	5.62 3.23 4.38						2				X			2						Rt. 127 southbound. In advance of intersection w/ Manhattan Dr.		
H.6 south-facing	[Downtown Logo] Winooski ↑ Downtown ← Waterfront [parking and waterfront symbols]	1 1 1	30 30 30	30 15.5 21	5.62 3.23 4.38						2				X			2						S. Willard St. northbound. In advance of intersection with Main St. Remove existing Dx.4 (5 green and white panels) with Vtrans coordination/approval		E-135 E-135
H.7 east-facing	[Downtown Logo] Downtown ↑ Waterfront [parking & waterfront symbols]	1 1	30 30	30 21	5.62 4.38						2				X			2						Main St. westbound. In advance of intersection with S. Willard St. Remove existing Dx.5 (4 green and white panels) with Vtrans coordination/approval		
H.8 north-facing	[Downtown Logo] Downtown → Waterfront [parking and waterfront symbols]	1 1	30 30	30 21	5.62 4.38						2				X			2						N. Willard St. southbound. In advance of intersection with Main St.		
H.10 north-facing	[Downtown Logo] Downtown ↑ Waterfront [parking and waterfront symbols] Church St. Marketplace [shopping and dining symbols] ↑	1 1 1	30 30 30	30 21 21	5.62 4.38 4.38						2				X			2						Park Street southbound. In advance of intersection with Sherman Street Remove existing Hx.6		
H.11 east-facing	[Downtown Logo] Waterfront [parking and waterfront symbols] ↑ Church St. Marketplace [shopping and dining symbols] ↑ Parking [parking symbol] w/ **LED** →&↑	1 1 1 1	30 30 30 30	30 15.5 21 21	5.62 3.23 4.38 4.38						2				X			2						Main St. westbound. In advance of intersection w/ S. Winooski Ave. LED arrow linked to Marketplace Garage: right when open & straight when full. Remove existing Hx.19		
H.12 west-facing	[Downtown Logo] Campus District [campus symbol] ↑ Parking ← [parking symbol] →	1 1 1	30 30 30	30 21 21	5.62 4.38 4.38						2				X			2						Main St. eastbound. In advance of intersection with S. Winooski Ave. Remove existing Hx.15.5		

SEE PLAN SHEETS FOR DETAILS ON SIGN GRAPHICS, POSTS, LOCATIONS, AND OTHER DETAILS.
FINAL POST LENGTHS ARE TO BE DETERMINED IN THE FIELD. POST SIZES ARE COMPUTED BASED ON INFORMATION FURNISHED ON THE STANDARD SHEETS AND THE TRAFFIC & SAFETY DIVISION'S "SIGN POST DESIGN GUIDELINE".
ALL SIGNS SHALL BE COMPLIANT WITH THE CONTRACT PLANS AND SPECIFICATIONS, LATEST MUTCD AND VTRANS STANDARDS.

Burlington

BURLINGTON WAYFINDING IMPROVEMENTS
STP 5000 (17)
BURLINGTON, VERMONT

CITY OF BURLINGTON
Community & Economic Development Office
Burlington City Hall
149 Church Street
Burlington, VT 05401
Ph: (802) 865-7144

Department of Public Works
PO Box 649
Burlington, VT 05402
Ph: (802) 863-9094

VT AGENCY OF TRANSPORTATION
Local Transportation Facilities
National Life Building, Drawer 33
Montpelier, VT 05633

FEDERAL HIGHWAY ADMINISTRATION
P. O. Box 568
Montpelier, VT 05601-0568

DESIGN TEAM

LandWorks
228 Maple St., Suite 32
Middlebury, VT 05753
802.388.3011

Resource Systems Group
55 Railroad Row
White River Junction, VT 05001
802.295.4999

REVISIONS

DATE	DESCRIPTION	BY

TRAFFIC SIGN SUMMARY SHEET 1

SCALE:	N.T.S.	SHEET
DESIGNED BY:	DJG	TSS1
DRAWN BY:	CDM	
CHECKED BY:	DJG	
DATE:	06/20/14	
PROJ. NO.:	STP5000(17)	

TRAFFIC SIGN SUMMARY SHEET 2

Sign Number	Sign Legend	Sign Dimensions EA	Width, in	Height, in	New & Salvages Signs "A"	"B"	Salv Sign	Salv TIS	Exist Post Retain	Salvage	New Sign Posts No. of Posts	Flanged Channel lb/ft 1.12	2	3	Tubular Aluminum (in) lb/ft 3 1.3	4 1.7	4.0mod 1.7	Found-ation	Tubular Steel (in) lb/ft 3 7.6	3.5 9	4 10.8	5 14.6	sign frame required	Remarks	Sign Detail Detail on Sheet No.	Std. Sheet Number
H.13 south-facing	[Downtown Logo] Parking [parking symbol] w/ **LED** ←&↑ Church St. Marketplace [shopping and dining symbols] ←	1 1 1	30 30 30	30 21 21	5.62 4.38 4.38						2				X			2						S. Winooski Ave. northbound. In advance of intersection with Bank St. LED arrow linked to Marketplace Garage: left when open & straight when full		
H.14 north-facing	[Downtown Logo] Parking [parking symbol] → Church St. Marketplace [shopping and dining symbols] →	1 1 1	30 30 30	30 21 21	5.62 4.38 4.38						2				X			2						So. Winooski southbound In advance of intersection with Bank St.		
H.15 south-facing	[Downtown Logo] Parking [parking symbol] ← Church St. Marketplace [shopping and dining symbols] ← Waterfront [parking and waterfront symbols] ←	1 1 1 1	30 30 30 30	30 21 21 15.5	5.62 4.38 4.38 3.23						2				X			2						S. Winooski Ave. northbound. In advance of intersection with Cherry St. Remove existing Dx.1 (on traffic signal arm)		
H.16 north-facing	[Downtown Logo] Parking [parking symbol] ↑→ Church St. Marketplace [shopping and dining symbols] → Waterfront [parking and waterfront symbols] →	1 1 1 1	30 30 30 30	30 21 21 15.5	5.62 4.38 4.38 3.23						2				X			2						S. Winooski Ave. southbound. In advance of intersection with Cherry St. Remove existing Hx.28		
H.17 south-facing	[Downtown Logo] Church St. Marketplace [shopping and dining symbols] ↑ Waterfront [parking and ferry symbols] ← Parking [parking symbol] →↑	1 1 1 1	30 30 30 30	30 21 15.5 15.5	5.62 4.38 3.23 3.23						2				X			2						Saint Paul St. northbound In advance of intersection with King St.		
H.18 north-facing	[Downtown Logo] Parking [parking symbol] ← Ferry [ferry symbol] → Waterfront [parking and waterfront symbols] →	1 1 1 1	30 30 30 30	30 15.5 15.5 15.5	5.62 3.23 3.23 3.23						2				X			2						Saint Paul St. southbound In advance of intersection with King St. Remove existing Hx.14		
H.19 south-facing	[Downtown Logo] Parking [parking symbol] w/ **LED** ←&→ Church St. Marketplace [shopping and dining symbols] → Waterfront [parking and waterfront symbols] ←	1 1 1 1	30 30 30 30	30 21 21 15.5	5.62 4.38 4.38 3.23						2				X			2						Saint Paul St. northbound In advance of intersection with Main St. LED arrow linked to Marketplace Garage: right when open and left when full		
H.20 north-facing	[Downtown Logo] [Parking Symbol] Parking ←→ Church St. Marketplace [shopping and dining symbols] ← Waterfront [parking and waterfront symbols] →	1 1 1 1	30 30 30 30	30 21 21 15.5	5.62 4.38 4.38 3.23						2				X			2						Saint Paul St. southbound In advance of intersection with Main St.		
H.21 south-facing	[Downtown Logo] Parking [parking symbol] ←→ [parking symbol] ↑ Church St. Marketplace [shopping and dining symbols] → Waterfront [parking and waterfront symbols] ←	1 1 1 1	30 30 30 30	30 21 21 15.5	5.62 4.38 4.38 3.23						2				X			2						Saint Paul St. northbound In advance of intersection with College St.		
H.22 north-facing	[Downtown Logo] Parking [parking symbol] ←→ Church St. Marketplace [shopping and dining symbols] ← Waterfront [parking and waterfront symbols] →	1 1 1 1	30 30 30 30	30 21 21 15.5	5.62 4.38 4.38 3.23						2				X			2						Saint Paul St. southbound In advance of intersection with College St.		
H.23 east-facing west-facing	[Downtown Logo] Parking [parking symbol] → Church St. Marketplace [shopping and dining symbols] ↑ Waterfront [parking and waterfront symbols] ↑ [Downtown Logo] Campus District [campus symbol] ↑	1 1 1 1 1 1	30 30 30 30 30 30	30 21 21 15.5 30 21	5.62 4.38 4.38 3.23 5.62 4.38						2				X			2						College St. westbound In advance of intersection with South Winooski Ave. Remove existing Hx.20		
H.24 west-facing	[Waterfront Logo] Church St. Marketplace [shopping and dining symbols] ← Parking [parking symbol] ←	1 1 1	30 30 30	30 21 21	5.62 4.38 4.38						2				X			2						King St. eastbound/from ferry dock In advance of intersection with Battery St. Remove existing Hx.3		
H.25 east-facing	[Waterfront Logo] Ferry [ferry symbol] ↑ Parking [parking symbol] →	1 1 1	30 30 30	30 15.5 21	5.62 3.23 4.38						2				X			2						King St. westbound In advance of intersection with Battery St.		

SEE PLAN SHEETS FOR DETAILS ON SIGN GRAPHICS, POSTS, LOCATIONS, AND OTHER DETAILS.
FINAL POST LENGTHS ARE TO BE DETERMINED IN THE FIELD. POST SIZES ARE COMPUTED BASED ON INFORMATION FURNISHED ON THE STANDARD SHEETS AND THE TRAFFIC & SAFETY DIVISION'S "SIGN POST DESIGN GUIDELINE".
ALL SIGNS SHALL BE COMPLIANT WITH THE CONTRACT PLANS AND SPECIFICATIONS, LATEST MUTCD AND VTRANS STANDARDS.

Burlington

BURLINGTON WAYFINDING IMPROVEMENTS
STP 5000 (17)
BURLINGTON, VERMONT

CITY OF BURLINGTON
Community & Economic Development Office
Burlington City Hall
149 Church Street
Burlington, VT 05401
Ph: (802) 865-7144

Department of Public Works
PO Box 649
Burlington, VT 05402
Ph: (802) 863-9094

VT AGENCY OF TRANSPORTATION
Local Transportation Facilities
National Life Building, Drawer 33
Montpelier, VT 05633

FEDERAL HIGHWAY ADMINISTRATION
P. O. Box 568
Montpelier, VT 05601-0568

DESIGN TEAM

LandWorks
228 Maple St., Suite 32
Middlebury, VT 05753
802.388.3011

Resource Systems Group
55 Railroad Row
White River Junction, VT 05001
802.295.4999

REVISIONS

DATE	DESCRIPTION	BY

TRAFFIC SIGN SUMMARY SHEET 2

SCALE:	N.T.S.
DESIGNED BY:	DJG
DRAWN BY:	CDM
CHECKED BY:	DJG
DATE:	06/20/14
PROJ. NO.:	STP5000(17)

SHEET TSSS2

TRAFFIC SIGN SUMMARY SHEET 3

Sign Number	Sign Legend	Sign Dimensions EA	Width, in	Height, in	New & Salvages Signs "A"	"B"	Salv Sign	Salv TIS	Exist Post Retain	Salvage	New Sign Posts No. of Posts	Flanged Channel lb/ft 1.12	2	3	Tubular Aluminum (in) lb/ft 3 1.3	4 1.7	4.0mod 1.7	Found-ation	Tubular Steel (in) lb/ft 3 7.6	3.5 9	4 10.8	5 14.6	sign frame required	Remarks	Sign Detail Detail on Sheet No.	Std. Sheet Number
H.26 north-facing	[Waterfront Logo] Ferry [ferry symbol] →	1 1	30 30	30 15.5	5.62 3.23						2				X			2						Battery St. westbound In advance of intersection with King St.		
H.27 south-facing	[Waterfront Logo] Waterfront [parking and waterfront symbols] ↑ Parking [parking symbol] ↑ Church St. Marketplace [shopping and dining symbols] →	1 1 1 1	30 30 30 30	30 15.5 21 21	5.62 3.23 4.38 4.38						2				X			2						Battery St. northbound In advance of intersection with Main St. Remove existing Hx.4		
H.28 east-facing	[Waterfront Logo] Waterfront [parking and waterfront symbols] → Parking [parking symbol] → Ferry [ferry symbol] ←	1 1 1 1	30 30 30 30	30 15.5 21 15.5	5.62 3.23 4.38 3.23						2				X			2						Main St. westbound In advance of intersection with Battery St. Remove existing H.32		
H.38 south-facing	[Waterfront Logo] Bus Only [Bus symbol] ←	1 1	30 30	30 15.5	5.62 3.23						2				X			2						Lake St. Northbound In advance of Waterfront (Pease) Lot		
H.39 south-facing	[Waterfront Logo] Parking [parking symbol] → Church St. Marketplace [shopping and dining symbols] → Old North End District ↑	1 1 1 1	30 30 30 30	30 21 21 21	5.62 4.38 4.38 4.38						2				X			2						Battery St. northbound In advance of intersection with Cherry St. Remove existing Hx.5		
H.40 east-facing	[Waterfront Logo] Waterfront [parking and waterfront symbols] ← Ferry [ferry symbol] ← Old North End District →	1 1 1 1	30 30 30 30	30 15.5 15.5 21	5.62 3.23 3.23 4.38						2				X			2						Cherry St. westbound In advance of intersection with Battery St.		
H.41 north-facing	[Waterfront Logo] Parking [parking symbol] ← Church St. Marketplace [shopping and dining symbols] ← Waterfront [parking and waterfront symbols] ↑	1 1 1 1	30 30 30 30	30 21 21 15.5	5.62 4.38 4.38 3.23						2				X			2						Battery St. southbound In advance of intersection with Cherry St.		
H.42 south-facing	[Downtown Logo] Parking [parking symbol] ↑ Church St. Marketplace [shopping and dining symbols] → Waterfront [parking and ferry symbols] ←	1 1 1 1	30 30 30 30	30 21 21 15.5	5.62 4.38 4.38 3.23						2				X			2						Pine St. northbound In advance of intersection with Main St. Remove existing Hx.9		
H.43 west-facing	[Downtown Logo] Church St. Marketplace [shopping and dining symbols] ↑ Parking [parking symbol] ←↑	1 1 1	30 30 30	30 21 21	5.62 4.38 4.38						2				X			2						Main St. eastbound In advance of intersection with Pine St. Remove existing Hx.8		
H.44 east-facing	[Downtown Logo] Waterfront [parking and waterfront symbols] ↑ Ferry [ferry symbol] ↑ Parking [parking symbol] →	1 1 1 1	30 30 30 30	30 15.5 15.5 21	5.62 3.23 3.23 4.38						2				X			2						Main St. westbound In advance of intersection with Pine St.		
H.45 south-facing	[Downtown Logo] Parking [parking symbol] ↑← Waterfront [parking and waterfront symbols] ← Church St. Marketplace [shopping and dining symbols] →	1 1 1 1	30 30 30 30	30 21 15.5 21	5.62 4.38 3.23 4.38						2				X			2						Pine St. northbound In advance of intersection with College St. Remove existing Hx.10		
H.46 north-facing	[Downtown Logo] Parking [parking symbol] → Waterfront [parking and waterfront symbols] → Church St. Marketplace [shopping and dining symbols] ←	1 1 1 1	30 30 30 30	30 21 15.5 21	5.62 4.38 3.23 4.38						2				X			2						Pine St. southbound In advance of intersection with College St.		
H.47 west-facing	[Downtown Logo] Church St. Marketplace [shopping and dining symbols] ↑ Campus District [campus symbol] ↑ Parking [parking symbol] ←	1 1 1 1	30 30 30 30	30 21 21 21	5.62 4.38 4.38 4.38						2				X			2						College St. eastbound In advance of intersection with Pine St.		
H.48 east-facing	[Downtown Logo] Parking [parking symbol] ↑→ Waterfront [parking and waterfront symbols] ↑ Ferry [ferry symbol] ↑	1 1 1 1	30 30 30 30	30 21 15.5 15.5	5.62 4.38 3.23 3.23						2				X			2						College St. westbound In advance of intersection with Pine St.		
H.49 east-facing	[Downtown Logo] Parking [parking symbol] ↑ Ferry [ferry symbol] Ù ←	1 1 1	30 30 30	30 21 15.5	5.62 4.38 3.23						2				X			2						Pine St. northbound In advance of intersection with King St.		

SEE PLAN SHEETS FOR DETAILS ON SIGN GRAPHICS, POSTS, LOCATIONS, AND OTHER DETAILS.
FINAL POST LENGTHS ARE TO BE DETERMINED IN THE FIELD. POST SIZES ARE COMPUTED BASED ON INFORMATION FURNISHED ON THE STANDARD SHEETS AND THE TRAFFIC & SAFETY DIVISION'S "SIGN POST DESIGN GUIDELINE".
ALL SIGNS SHALL BE COMPLIANT WITH THE CONTRACT PLANS AND SPECIFICATIONS, LATEST MUTCD AND VTRANS STANDARDS.

Burlington

BURLINGTON WAYFINDING IMPROVEMENTS
STP 5000 (17)
BURLINGTON, VERMONT

CITY OF BURLINGTON
Community & Economic Development Office
Burlington City Hall
149 Church Street
Burlington, VT 05401
Ph: (802) 865-7144

Department of Public Works
PO Box 649
Burlington, VT 05402
Ph: (802) 863-9094

VT AGENCY OF TRANSPORTATION
Local Transportation Facilities
National Life Building, Drawer 33
Montpelier, VT 05633

FEDERAL HIGHWAY ADMINISTRATION
P. O. Box 568
Montpelier, VT 05601-0568

DESIGN TEAM

LandWorks
228 Maple St., Suite 32
Middlebury, VT 05753
802.388.3011

Resource Systems Group
55 Railroad Row
White River Junction, VT 05001
802.295.4999

REVISIONS

DATE	DESCRIPTION	BY

TRAFFIC SIGN SUMMARY SHEET 3

SCALE:	N.T.S.
DESIGNED BY:	DJG
DRAWN BY:	CDM
CHECKED BY:	DJG
DATE:	06/20/14
PROJ. NO.:	STP5000(17)

SHEET TSSS3

TRAFFIC SIGN SUMMARY SHEET 4

Sign Number	Sign Legend	Sign Dimensions EA	Sign Dimensions Width, in	Sign Dimensions Height, in	New & Salvages Signs "A"	New & Salvages Signs "B"	New & Salvages Signs Salv Sign	New & Salvages Signs Salv TIS	Exist Post Retain	Exist Post Salvage	No. of Posts	Flanged Channel lb/ft 1.12	Flanged Channel lb/ft 2	Flanged Channel lb/ft 3	Tubular Aluminum (in) lb/ft 3	Tubular Aluminum (in) lb/ft 4	Tubular Aluminum (in) lb/ft 4.0mod	Found-ation	Tubular Steel (in) lb/ft 3	Tubular Steel (in) lb/ft 3.5	Tubular Steel (in) lb/ft 4	Tubular Steel (in) lb/ft 5	sign frame required	Remarks	Sign Detail: Detail on Sheet No.	Sign Detail: Std. Sheet Number
	Small Directional Signs																									
S.1 west-facing	[parking symbol header] →	1 1	18 18	16.5 10	1.82 1.25						1													Cherry St.westbound In advance of intersection with So. Winooski Ave.		
S.2 north-facing	[parking symbol header] →	1 1	18 18	16.5 10	1.82 1.25						1													S. Winooski Ave. southbound In advance of intersection with Main St.		
S.3 west-facing	[parking symbol header] ←	1 1	18 18	16.5 10	1.82 1.25						1													College St. eastbound In advance of intersection with Center St. Remove existing sign		
S.4 south-facing	[parking symbol header] ←→	1 1	18 18	16.5 10	1.82 1.25						1													Saint Paul St. northbound In advance of intersection with Bank St.		
S.5 east-facing	[parking symbol header] ↑ [$ symbol] ←	1 1 1	18 18 18	16.5 10 8	1.82 1.25 1						1													Bank St. westbound In advance of intersection with Saint Paul St.		
S.6 east-facing	[parking symbol header] ←→	1 1	18 18	16.5 10	1.82 1.25						1													Bank St. westbound In advance of intersection with Pine St.		
	Pedestrian Signs																									
PW.1 west-facing	[pedestrian symbol] [arrow] Church Street Marketplace [marketplace symbol] [amenity symbol set] Waterfront [waterfront symbol] [amenity symbol set] [.63 miles]	1 1	21 21	6 24	0.88 3.5											X		1						Marketplace Garage; At Cherry Street end of red sidewalk along north entrance drive; On curb island between red sidewalk and entrance drive. Freestanding.		
PW.3 south-facing east-facing	[pedestrian symbol] [arrow] Elevators *Ascenseurs* [elevator symbol] [pedestrian symbol] [arrow] Stairs *Escaliers* [stair symbol] NO Loitering, Skateboarding, Rollerblading [symbols] Please walk bicycles [symbol]	1 1	14 14	16 12	1.56 1.17											X		1						Marketplace Garage; Cherry Street tower; On north side of concrete column between tower and entrance drive. Remove existing blue and white sign		
PW.4 north-facing west-facing south-facing	[pedestrian symbol] [arrow] Waterfront [waterfront symbol] [amenity symbol set] [.58 miles] [pedestrian symbol] [arrow] Church Street Marketplace [marketplace symbol] [amenity symbol set]	1	21	36	5.25											X		1						Marketplace Garage; Church Street tower; On west-facing wall opposite tower door; Right of or above opening into garage. Remove existing blue and white sign		
PW.5 west-facing	[pedestrian symbol] [arrow] Church Street Marketplace [marketplace symbol] [amenity symbol set]	1	21	16	2.33											X		1						Marketplace Garage; Church Street tower; On north-facing wall at east end of alley. Remove existing blue and white sign		
PW.6 north-facing	[pedestrian symbol] [arrow] Elevators *Ascenseurs* [elevator symbol] Stairs *Escaliers* [stair symbol] NO Loitering, Skateboarding, Rollerblading [symbols] Please walk bicycles [symbol]	 1 1	 21 21	 16 18	 2.33 2.63											X		1						Marketplace Garage; Church Street tower; On west-facing wall at east end of alley Remove existing blue and white sign		
PW.7 west-facing south-facing	[pedestrian symbol] [arrow] Elevators *Ascenseurs* [elevator symbol] Church Street Marketplace [marketplace symbol] [amenity symbol set] [pedestrian symbol] [arrow] Stairs *Escaliers* [stair symbol] NO Loitering, Skateboarding, Rollerblading [symbols] Please walk bicycles [symbol]	 1 1	 21 21	 32 18	 4.67 2.63											X		1						Marketplace Garage; On east facing wall above or left of opening at end of alley from S. Winooski Avenue. Remove existing blue and white sign		
PW.9 west-facing	[pedestrian symbol] [arrow] Church Street Marketplace [marketplace symbol] [amenity symbol set] Waterfront [waterfront symbol] [amenity symbol set] [.56 miles)]	1 1	21 21	6 24	0.88 3.5																			Marketplace Garage; At Bank Street end of walkway from Bank St. tower;SE corner of garage; Mount above walkway on brick wall.		

SEE PLAN SHEETS FOR DETAILS ON SIGN GRAPHICS, POSTS, LOCATIONS, AND OTHER DETAILS.
FINAL POST LENGTHS ARE TO BE DETERMINED IN THE FIELD. POST SIZES ARE COMPUTED BASED ON INFORMATION FURNISHED ON THE STANDARD SHEETS AND THE TRAFFIC & SAFETY DIVISION'S "SIGN POST DESIGN GUIDELINE".
ALL SIGNS SHALL BE COMPLIANT WITH THE CONTRACT PLANS AND SPECIFICATIONS, LATEST MUTCD AND VTRANS STANDARDS.

Burlington

BURLINGTON WAYFINDING IMPROVEMENTS
STP 5000 (17)
BURLINGTON, VERMONT

CITY OF BURLINGTON
Community & Economic Development Office
Burlington City Hall
149 Church Street
Burlington, VT 05401
Ph: (802) 865-7144

Department of Public Works
PO Box 649
Burlington, VT 05402
Ph: (802) 863-9094

VT AGENCY OF TRANSPORTATION
Local Transportation Facilities
National Life Building, Drawer 33
Montpelier, VT 05633

FEDERAL HIGHWAY ADMINISTRATION
P. O. Box 568
Montpelier, VT 05601-0568

DESIGN TEAM

LandWorks
228 Maple St., Suite 32
Middlebury, VT 05753
802.388.3011

Resource Systems Group
55 Railroad Row
White River Junction, VT 05001
802.295.4999

REVISIONS

DATE	DESCRIPTION	BY

TRAFFIC SIGN SUMMARY SHEET 4

SCALE:	N.T.S.
DESIGNED BY:	DJG
DRAWN BY:	CDM
CHECKED BY:	DJG
DATE:	06/20/14
PROJ. NO.:	STP5000 (17)

SHEET TSSS4

TRAFFIC SIGN SUMMARY SHEET 5

Sign Number	Sign Legend	Sign Dimensions			New & Salvages Signs				Exist Post		New Sign Posts													Remarks	Sign Detail	
											Flanged Channel			Tubular Aluminum (in)				Tubular Steel (in)								
											lb/ft			3	4 lb/ft	4.0mod		3	3.5 lb/ft	4	5					
		EA	Width, in	Height, in	"A"	"B"	Salv Sign	Salv TIS	Retain	Salvage	No. of Posts	1.12	2	3	1.3	1.7	1.7	Found-ation	7.6	9	10.8	14.6	sign frame required		Detail on Sheet No.	Std. Sheet Number
PW.10	[pedestrian symbol] [arrow]	1	21	6	0.88											X		1						Church Street Marketplace; At Pearl Street		
south-facing	Bus Station [bus symbol]	1	21	24	3.5																			on Southeast corner.		
	Information [information symbol]																									
	Restrooms *Toilettes* [restrooms symbol]																									
east-facing	Fleming Museum [museum symbol] [.68 miles]																									
west-facing	[pedestrian symbol] [arrow]	1	21	6	0.88																					
	Battery Park [park symbol] [.34 miles]	1	21	18	2.63																					
	Waterfront [waterfront symbol] [amenity symbol set] [.67 miles]																									
PW.11	[pedestrian symbol] [arrow]	1	21	6	0.88											X		1						Church Street Marketplace; At Cherry Street		
south-facing	Restrooms *Toilettes* [restrooms symbol]	1	21	12	1.75																			on Southeast corner.		
	Information [information symbol]																									
east-facing	[pedestrian symbol] [arrow]	1	21	6	0.88																					
	Marketplace Garage [parking symbol]	1	21	6	0.88																					
west-facing	[pedestrian symbol] [arrow]	1	21	6	0.88																					
	Parking Garages *Stationnement intérieur* [parking symbol]	1	21	30	4.38																					
	Burlington Town Center																									
	Lakeview																									
	Battery Park [park symbol] [.40 miles]																									
	Waterfront [waterfront symbol] [amenity symbol set] [.60 miles]																									
PW.12	[pedestrian symbol] [arrow]	1	21	6	0.88											X		1						Church Street Marketplace; At west end of Marketplace		
east-facing	Marketplace Garage [parking symbol]	1	21	6	0.88																			Garage alley.		
west-facing	[pedestrian symbol] [arrow]	1	21	6	0.88																					
	Restrooms *Toilettes* [restrooms symbol]	1	21	12	1.75																					
	In Burlington Town Center																									
PW.13	[pedestrian symbol] [arrow]	1	21	6	0.88											X		1						Church Street Marketplace; At Bank Street		
north-facing	Information [information symbol]	1	21	18	2.63																			on northeast Corner		
	Restrooms *Toilettes* [restrooms symbol]																									
	In Burlington Town Center																									
	Bus Station [bus symbol]																									
south-facing	[pedestrian symbol] [arrow]	1	21	6	0.88																					
	City Hall [restrooms symbol]	1	21	12	1.75																					
	City Hall Park [park symbol]																									
east-facing	[pedestrian symbol] [arrow]	1	21	6	0.88																					
	Marketplace Garage [parking symbol]	1	21	6	0.88																					
west-facing	[pedestrian symbol] [arrow]	1	21	6	0.88																					
	Parking Garages *Stationnement intérieur* [parking symbol]	1	21	30	4.38																					
	Town Center																									
	Lakeview																									
	College Street																									
	Waterfront [waterfront symbol] [amenity symbol set] [.51 miles]																									
PW.14	[pedestrian symbol] [arrow]	1	21	6	0.88											X		1						Church Street Marketplace; At College Street		
north-facing	Information [information symbol]	1	21	18	2.63																			at Southeast Corner.		
	Restrooms *Toilettes* [restrooms symbol]																									
	In Burlington Town Center																									
	Bus Station [bus symbol]																									
south-facing	[pedestrian symbol] [arrow]	1	21	6	0.88																					
	City Hall [restrooms symbol]	1	21	6	0.88																					
east-facing	[pedestrian symbol] [arrow]	1	21	6	0.88																					
	Library Bibliothèque [library symbol]	1	21	24	3.5																					
	Campus District [campus symbol] [.59 miles]																									
west-facing	[pedestrian symbol] [arrow]	1	21	6	0.88																					
	City Hall Park [park symbol]	1	21	12	1.75																					
	College Street Garage [parking symbol]																									
	Waterfront [waterfront symbol] [amenity symbol set] [.44 miles]																									
PW.15	[pedestrian symbol] [arrow]	1	21	6	0.88											X		1						Church Street Marketplace; In City Hall landscaped area/raised		
west-facing	City Hall Park [park symbol]	1	21	6	0.88																			planting bed at Firehouse alley		
																								Post height reduced 24" due to location in raised planting bed		

SEE PLAN SHEETS FOR DETAILS ON SIGN GRAPHICS, POSTS, LOCATIONS, AND OTHER DETAILS.
FINAL POST LENGTHS ARE TO BE DETERMINED IN THE FIELD. POST SIZES ARE COMPUTED BASED ON INFORMATION FURNISHED ON THE STANDARD SHEETS AND THE TRAFFIC & SAFETY DIVISION'S "SIGN POST DESIGN GUIDELINE".
ALL SIGNS SHALL BE COMPLIANT WITH THE CONTRACT PLANS AND SPECIFICATIONS, LATEST MUTCD AND VTRANS STANDARDS.

Burlington

BURLINGTON WAYFINDING IMPROVEMENTS
STP 5000 (17)
BURLINGTON, VERMONT

CITY OF BURLINGTON
Community & Economic Development Office
Burlington City Hall
149 Church Street
Burlington, VT 05401
Ph: (802) 865-7144

Department of Public Works
PO Box 649
Burlington, VT 05402
Ph: (802) 863-9094

VT AGENCY OF TRANSPORTATION
Local Transportation Facilities
National Life Building, Drawer 33
Montpelier, VT 05633

FEDERAL HIGHWAY ADMINISTRATION
P. O. Box 568
Montpelier, VT 05601-0568

DESIGN TEAM

LandWorks
228 Maple St., Suite 32
Middlebury, VT 05753
802.388.3011

Resource Systems Group
55 Railroad Row
White River Junction, VT 05001
802.295.4999

REVISIONS

DATE	DESCRIPTION	BY

TRAFFIC SIGN SUMMARY SHEET 5

SCALE:	N.T.S.	SHEET
DESIGNED BY:	DJG	TSSS5
DRAWN BY:	CDM	
CHECKED BY:	DJG	
DATE:	06/20/14	
PROJ. NO.:	STP5000(17)	

TRAFFIC SIGN SUMMARY SHEET 6

Sign Number	Sign Legend	Sign Dimensions			New & Salvages Signs				Exist Post		New Sign Posts													Remarks	Sign Detail	
												Flanged Channel			Tubular Aluminum (in)				Tubular Steel (in)							
												lb/ft			3	4	4.0mod		3	3.5	4	5				
															lb/ft				lb/ft							
		EA	Width, in	Height, in	"A"	"B"	Salv Sign	Salv TIS	Retain	Salvage	No. of Posts	1.12	2	3	1.3	1.7	1.7	Found-ation	7.6	9	10.8	14.6	sign frame required		Detail on Sheet No.	Std. Sheet Number
PW.16	[pedestrian symbol] [arrow]	1	21	6	0.88											X		1						Church Street Marketplace; At Main Street		
north-facing	Information [information symbol]	1	21	18	2.63																			on Northeast Corner		
	Restrooms *Toilettes* [restrooms symbol]																									
	In City Hall																									
	Bus Station [bus symbol]																									
east-facing	[pedestrian symbol] [arrow]	1	21	6	0.88																					
	Campus District [campus symbol] [.58 miles]	1	21	6	0.88																					
west-facing	[pedestrian symbol] [arrow]	1	21	6	0.88																					
	Waterfront [waterfront symbol] [amenity symbol set] [.50 miles]	1	21	12	1.75																					
PW.17	[pedestrian symbol] [arrow]	1	21	6	0.88											X		1						Town Center Garage; At Cherry Street entrance/exit; East side		
east-facing	Church Street Marketplace [marketplace symbol] [amenity symbol set]	1	21	12	1.75																			of garage access		
west-facing	[pedestrian symbol] [arrow]	1	21	6	0.88																			This sign is to be installed by the property owner.		
	Battery Park [park symbol]	1	21	18	2.63																					
	Waterfront [waterfront symbol] [amenity symbol set] [.46 miles]																									
PW.18	[pedestrian symbol] [arrow]	1	21	6	0.88											X		1						Town Center Garage; At Bank Street entrance/exit;		
east-facing	Church Street Marketplace [marketplace symbol] [amenity symbol set] [.15 miles]	1	21	12	1.75																			Aligned with crosswalk/sidewalk on north side of Bank Street;		
northwest-facing	[pedestrian symbol] [arrow]	1	21	6	0.88																			Adjacent to sidewalk into Town Center on west side of		
	Parking Garages *Stationnement intérieur* [parking symbol]	1	21	30	4.38																			entrance/exit drive; NW panel pointed toward recreation path		
	Lakeview																							between buildings		
	College Street																							Post height increased due to non 90 degree angles requierd		
	Battery Park [park symbol] [.33 miles]																							(panels must be mounted above/below one another; not at same		
	Waterfront [waterfront symbol] [amenity symbol set] [.35 miles]																							top level)		
PW.19	[pedestrian symbol] [arrow]	1	21	6	0.88											X		1						Lakeview Garage; At Cherry Street entrance/exit; East side		
east-facing	Church Street Marketplace [marketplace symbol] [amenity symbol set] [.21 miles]	1	21	12	1.75																			of garage access		
west-facing	[pedestrian symbol] [arrow]	1	21	6	0.88																			Coordinate sign location w/ City of Burlington prior to installation.		
	Battery Park [symbol]	1	21	18	2.63																					
	Waterfront [waterfront symbol] [amenity symbol set] [.37 miles]																									
PW.20	[pedestrian symbol] [arrow]	1	21	6	0.88											X		1						Lakeview Garage and College Street Garage connection;		
east-facing	Church Street Marketplace [marketplace symbol] [amenity symbol set] [.23 miles]	1	21	12	1.75																			On rec path between garages		
west-facing	[pedestrian symbol] [arrow]	1	21	6	0.88																			Avoid conflict with existing bike route sign		
	Battery Park [park symbol]	1	21	18	2.63																					
	Waterfront [symbol set]																									
PW.21	[pedestrian symbol] [arrow]	1	21	6	0.88											X		1						College Street Garage; At College Street end of entrance/exit drive		
east-facing	Church Street Marketplace [marketplace symbol] [amenity symbol set] [.21 miles]	1	21	18	2.63																			Avoid conflict with proposed sign Pf.3		
	Campus District [campus symbol] [.81 miles]																									
west-facing	[pedestrian symbol] [arrow]	1	21	6	0.88																					
	Waterfront [waterfront symbol] [amenity symbol set]	1	21	12	1.75																					
PW.22	[pedestrian symbol] [arrow]	1	21	6	0.88											X		1						Recreation path between College Street Garage and Lakeview		
south-facing	Church Street Marketplace [marketplace symbol] [amenity symbol set] [.28 miles]	1	21	12	1.75																			Garage; At corner in path along west side of Lakeview Garage		
west-facing	[pedestrian symbol] [arrow]	1	21	6	0.88																					
	Battery Park [park symbol]	1	21	18	2.63																					
	Waterfront [waterfront symbol] [amenity symbol set]																									
PW.23	[pedestrian symbol] [arrow]	1	21	6	0.88											X		1						Recreation path between College Street Garage and Lakeview		
north-facing	Battery Park [park symbol]	1	21	18	2.63																			Garage; At Northwest corner of College Street Garage.		
	Waterfront [waterfront symbol] [amenity symbol set]																							Mount on Existing Light Post.		
east-facing	[pedestrian symbol] [arrow]	1	21	6	0.88																					
	Church Street Marketplace [marketplace symbol] [amenity symbol set] [.26 miles]	1	21	12	1.75																					

SEE PLAN SHEETS FOR DETAILS ON SIGN GRAPHICS, POSTS, LOCATIONS, AND OTHER DETAILS.
FINAL POST LENGTHS ARE TO BE DETERMINED IN THE FIELD. POST SIZES ARE COMPUTED BASED ON INFORMATION FURNISHED ON THE STANDARD SHEETS AND THE TRAFFIC & SAFETY DIVISION'S "SIGN POST DESIGN GUIDELINE".
ALL SIGNS SHALL BE COMPLIANT WITH THE CONTRACT PLANS AND SPECIFICATIONS, LATEST MUTCD AND VTRANS STANDARDS.

Burlington

BURLINGTON WAYFINDING IMPROVEMENTS
STP 5000 (17)
BURLINGTON, VERMONT

CITY OF BURLINGTON
Community & Economic Development Office
Burlington City Hall
149 Church Street
Burlington, VT 05401
Ph: (802) 865-7144

Department of Public Works
PO Box 649
Burlington, VT 05402
Ph: (802) 863-9094

VT AGENCY OF TRANSPORTATION
Local Transportation Facilities
National Life Building, Drawer 33
Montpelier, VT 05633

FEDERAL HIGHWAY ADMINISTRATION
P. O. Box 568
Montpelier, VT 05601-0568

DESIGN TEAM

LandWorks
228 Maple St., Suite 32
Middlebury, VT 05753
802.388.3011

Resource Systems Group
55 Railroad Row
White River Junction, VT 05001
802.295.4999

REVISIONS

DATE	DESCRIPTION	BY

TRAFFIC SIGN SUMMARY SHEET 5

SCALE:	N.T.S.
DESIGNED BY:	DJG
DRAWN BY:	CDM
CHECKED BY:	DJG
DATE:	06/20/14
PROJ. NO.:	STP5000(17)

SHEET TSSS5

TRAFFIC SIGN SUMMARY SHEET 7

Sign Number	Sign Legend	Sign Dimensions			New & Salvages Signs				Exist Post			Flanged Channel			New Sign Posts				Tubular Steel (in)					Remarks	Sign Detail	
		EA	Width, in	Height, in	"A"	"B"	Salv Sign	Salv TIS	Retain	Salvage	No. of Posts	lb/ft 1.12	lb/ft 2	lb/ft 3	Tubular Aluminum (in) 3 lb/ft 1.3	4 lb/ft 1.7	4.0mod 1.7	Found-ation	3 lb/ft 7.6	3.5 lb/ft 9	4 lb/ft 10.8	5 lb/ft 14.6	sign frame required		Detail on Sheet No.	Std. Sheet Number
PW.24	[pedestrian symbol] [arrow]	1	21	6	0.88											X		1						Battery Street and Pearl Street; Southeast corner of intersection		
south-facing	Waterfront [waterfront symbol] [amenity symbol set]	1	21	30	4.38																					
	Parking Garages *Stationnement intérieur* [parking symbol]																									
	Burlington Town Center																									
	Lakeview																									
	College Street																									
east-facing	[pedestrian symbol] [arrow]	1	21	6	0.88																					
	Church Street Marketplace [marketplace symbol] [amenity symbol set] [.30 miles]	1	21	18	2.63																					
	Campus District [campus symbol] [.90 miles]																									
west-facing	[pedestrian symbol] [arrow]	1	21	6	0.88																					
	Battery Park [park symbol]	1	21	6	0.88																					
PW.25	[pedestrian symbol] [arrow]	1	21	6	0.88											X		1						Battery Street and Cherry Street; Southeast corner of intersection		
south-facing	Waterfront [waterfront symbol] [amenity symbol set]	1	21	24	3.5																					
	College Street Garage [parking symbol]																									
east-facing	[pedestrian symbol] [arrow]	1	21	6	0.88																					
	Parking Garages *Stationnement intérieur* [parking symbol]	1	21	24	3.5																					
	Town Center																									
	Lakeview																									
	Church Street Marketplace [marketplace symbol] [amenity symbol set] [.30 miles]																									
west-facing	[pedestrian symbol] [arrow]	1	21	6	0.88																					
	Battery Park [park symbol]	1	21	6	0.88																					
PW.26	[pedestrian symbol] [arrow]	1	21	6	0.88											X		1						Battery Street; At recreation path between hotels		
north-facing	Battery Park [park symbol]	1	21	24	3.5																					
	Burlington Town Center Garage [parking symbol]																									
	Church Street Marketplace [marketplace symbol] [amenity symbol set] [.33 miles]																									
south-facing	[pedestrian symbol] [arrow]	1	21	6	0.88																					
	Waterfront [waterfront symbol] [amenity symbol set]	1	21	12	1.75																					
east-facing	[pedestrian symbol] [arrow]	1	21	6	0.88																					
	Lakeview Garage [parking symbol]	1	21	6	0.88																					
PW.27	[pedestrian symbol] [arrow]	1	21	6	0.88											X		1						Battery Street and College Street; northern side of intersection Post height increased 6" for empty bracket for temporary event panel		
north-facing	Battery Park [park symbol]	1	21	18	2.63																					
	Parking Garages *Stationnement intérieur* [parking symbol]																									
	Lakeview																									
	Burlington Town Center																									
south-facing	[pedestrian symbol] [arrow]	1	21	6	0.88																					
	Union Station [RR symbol]	1	21	12	1.75																					
	Ferry [ferry symbol] [.30 miles]																									
east-facing	[pedestrian symbol] [arrow]	1	21	6	0.88																					
	College Street Garage [parking symbol]	1	21	24	3.5																					
	Church Street Marketplace [marketplace symbol] [amenity symbol set] [.30 miles]																									
	Campus District [campus symbol] [.90 miles]																									
west-facing	[empty bracket for temporary event panel]																									
	[pedestrian symbol] [arrow]	1	21	6	0.88																					
	Waterfront [waterfront symbol] [amenity symbol set w/o ferry symbol]	1	21	12	1.75																					
PW.28	[pedestrian symbol] [arrow]	1	21	6	0.88											X		1						Battery Street and Main Street; Northeast corner of intersection. Specific corner of intersections TBD		
north-facing	Battery Park [park symbol]	1	21	18	2.63																					
	Parking Garages [parking symbol]																									
	College Street																									
	Lakeview																									
	Burlington Town Center																									
south-facing	[pedestrian symbol] [arrow]	1	21	6	0.88																					
	Ferry [ferry symbol]	1	21	6	0.88																					
east-facing	[pedestrian symbol] [arrow]	1	21	6	0.88																					
	Church Street Marketplace [marketplace symbol] [amenity symbol set] [.31 miles]	1	21	18	2.63																					
	Campus District [campus symbol] [.91 miles]																									
west-facing	[pedestrian symbol] [arrow]	1	21	6	0.88																					
	Union Station [RR symbol]	1	21	18	2.63																					
	Waterfront [waterfront symbol] [amenity symbol set w/o ferry symbol]																									

SEE PLAN SHEETS FOR DETAILS ON SIGN GRAPHICS, POSTS, LOCATIONS, AND OTHER DETAILS.
FINAL POST LENGTHS ARE TO BE DETERMINED IN THE FIELD. POST SIZES ARE COMPUTED BASED ON INFORMATION FURNISHED ON THE STANDARD SHEETS AND THE TRAFFIC & SAFETY DIVISION'S "SIGN POST DESIGN GUIDELINE".
ALL SIGNS SHALL BE COMPLIANT WITH THE CONTRACT PLANS AND SPECIFICATIONS, LATEST MUTCD AND VTRANS STANDARDS.

Burlington

BURLINGTON WAYFINDING IMPROVEMENTS
STP 5000 (17)
BURLINGTON, VERMONT

CITY OF BURLINGTON
Community & Economic Development Office
Burlington City Hall
149 Church Street
Burlington, VT 05401
Ph: (802) 865-7144

Department of Public Works
PO Box 649
Burlington, VT 05402
Ph: (802) 863-9094

VT AGENCY OF TRANSPORTATION
Local Transportation Facilities
National Life Building, Drawer 33
Montpelier, VT 05633

FEDERAL HIGHWAY ADMINISTRATION
P. O. Box 568
Montpelier, VT 05601-0568

DESIGN TEAM

LandWorks
228 Maple St., Suite 32
Middlebury, VT 05753
802.388.3011

Resource Systems Group
55 Railroad Row
White River Junction, VT 05001
802.295.4999

REVISIONS

DATE	DESCRIPTION	BY

TRAFFIC SIGN SUMMARY SHEET 7

SCALE:	N.T.S.
DESIGNED BY:	DJG
DRAWN BY:	CDM
CHECKED BY:	DJG
DATE:	06/20/14
PROJ. NO.:	STP5000(17)

SHEET TSS7

TRAFFIC SIGN SUMMARY SHEET 8

Sign Number	Sign Legend	Sign Dimensions EA	Width, in	Height, in	New & Salvages Signs "A"	"B"	Salv Sign	Salv TIS	Exist Post Retain	Salvage	No. of Posts	Flanged Channel lb/ft 1.12	2	3	New Sign Posts Tubular Aluminum (in) 3 lb/ft 1.3	4 lb/ft 1.7	4.0mod 1.7	Found-ation	Tubular Steel (in) 3 lb/ft 7.6	3.5 lb/ft 9	4 lb/ft 10.8	5 lb/ft 14.6	sign frame required	Remarks	Sign Detail Detail on Sheet No.	Std. Sheet Number
PW.29	[pedestrian symbol] [arrow]	1	21	6	0.88											X		1						College Street and Lake Street; NE corner of intersection		
northwest-facing	Skate Park [skateboard symbol]	1	21	12	1.75																			Post height increased due to non-90° angles required (panels		
	Dog Park [dog symbol]																							must be mounted above/below one another; not at same top		
southwest-facing	[pedestrian symbol] [arrow]	1	21	6	0.88																			level) and for empty bracket for temporary event panel		
	Union Station [RR symbol]	1	21	12	1.75																			Avoid conflict w/ Main Street Landing sign		
	Ferry [ferry symbol] [.30 miles]																									
east-facing	[pedestrian symbol] [arrow]	1	21	6	0.88																					
	Church Street Marketplace [marketplace symbol] [amenity symbol set] [.35 miles]	1	21	18	2.63																					
	Campus District [campus symbol] [.95 miles																									
west-facing	[empty bracket for temporary event panel]																									
	[pedestrian symbol] [arrow]	1	21	6	0.88																					
	Restrooms *Toilettes* [restrooms symbol]	1	21	48	?																					
	Information [information symbol]																									
	ECHO Lake Aquarium and Science Center [ECHO symbol]																									
	Leahy Ctr. for Lake Champlain																									
	Waterfront Park [park symbol]																									
	Municipal Boat Slips [marina symbol]																									
	Community Boathouse [boat symbol]																									
	Fishing Pier [fishing symbol]																									
	Navy Memorial [memorial symbol]																									
PW.30	[empty bracket for temporary event panel]															X		1						Lake Street and Union Station; Install on west side of Lake Street.		
northwest-facing	[pedestrian symbol] [arrow]	1	21	6	0.88																			Post height increased 6" for empty bracket for temporary		
	Waterfront [waterfront symbol] [amenity symbol set w/o ferry symbol]	1	21	12	1.75																			event panel		
east-facing	[pedestrian symbol] [arrow]	1	21	6	0.88																					
	Ferry [ferry symbol]	1	21	24	3.5																					
	Church Street Marketplace [marketplace symbol] [amenity symbol set] [.33 miles]																									
	Campus District [campus symbol] [.93 miles]																									
PW.31	[empty bracket for temporary event panel]															X		1						College Street at Waterfront; In landscape island opposite		
northwest-facing	[pedestrian symbol] [arrow]	1	21	6	0.88																			sidewalk along east side of ECHO		
	Waterfront Promendade [promenade symbol]	1	21	6	0.88																			Post height increased due to non-90 degree angles required		
south-facing	[pedestrian symbol] [arrow]	1	21	6	0.88																			(panels must be mounted above/below one another; not at same		
	Hoehl Park [park symbol]	1	21	12	1.75																			top level) and for empty bracket for temporary event panel.		
	Navy Memorial [memorial symbol]																							Avoid conflict w/ proposed College Street Project signage and		
east-facing	[pedestrian symbol] [arrow]	1	21	6	0.88																			w/ proposed Leahy Center sign.		
	Restrooms *Toilettes* [restrooms symbol]	1	21	24	3.5																					
	Information [information symbol]																									
	Church Street Marketplace [marketplace symbol] [amenity symbol set] [.40 miles]																									
	Campus District [campus symbol] [1.0 mile]																									
west-facing	[pedestrian symbol] [arrow]	1	21	6	0.88																					
	Municipal Boat Slips [marina symbol]	1	21	24	3.5																					
	Community Boathouse [boat symbol]																									
	Restrooms *Toilettes* [restrooms symbol]																									
	Fishing Pier [fishing symbol]																									
	Parking Signs																									
Pf.1	[parking symbol]	1	36	156																				Marketplace garage. Freestanding. At Bank St. entrance.		
east/west																								Pay for under pay item 900.620 S.P. (Parking ID Freestanding		
facing	[LED [Open/Full]																							Sign)		
	[LED multi-directional arrow]																							Remove existing Hx.16		
	[LED directional message]																									
Pl.1	Marketplace Garage	1	132	16																				Marketplace Garage. Building mounted. Above Bank St. entrance.		
south-facing	Maximum Height 7 ft (2.13 m)	1	96	8	5.33																			Remove existing 2 hrs. free and clearance signs		
																								Paid for under pay item 900.620 S.P. (Internally Illuminated Sign)		
																								Non-illuminated sign paid for under item 675.20		
Ps.1																								Marketplace Garage. Building mounted.		
north/fouth	[parking symbol] B-B	1	72" Diameter																					Projecting from east side of Bank St. tower.		
facing																								Paid for under pay item 900.620 S.P. (Internally Illuminated Sign)		
Pf.2	[parking symbol]	1	36	156																				Marketplace Garage. Freestanding. At Cherry St. entrance.		
east/west																								Pay for under pay item 900.620 S.P. (Parking ID Freestanding		
facing	[LED [Open/Full]																							Sign)		
	[LED multi-directional arrow]																							Remove existing Hx.15		
	[LED directional message]																									

SEE PLAN SHEETS FOR DETAILS ON SIGN GRAPHICS, POSTS, LOCATIONS, AND OTHER DETAILS.
FINAL POST LENGTHS ARE TO BE DETERMINED IN THE FIELD. POST SIZES ARE COMPUTED BASED ON INFORMATION FURNISHED ON THE STANDARD SHEETS AND THE TRAFFIC & SAFETY DIVISION'S "SIGN POST DESIGN GUIDELINE".
ALL SIGNS SHALL BE COMPLIANT WITH THE CONTRACT PLANS AND SPECIFICATIONS, LATEST MUTCD AND VTRANS STANDARDS.

Burlington

BURLINGTON WAYFINDING IMPROVEMENTS
STP 5000 (17)
BURLINGTON, VERMONT

CITY OF BURLINGTON
Community & Economic Development Office
Burlington City Hall
149 Church Street
Burlington, VT 05401
Ph: (802) 865-7144

Department of Public Works
PO Box 649
Burlington, VT 05402
Ph: (802) 863-9094

VT AGENCY OF TRANSPORTATION
Local Transportation Facilities
National Life Building, Drawer 33
Montpelier, VT 05633

FEDERAL HIGHWAY ADMINISTRATION
P. O. Box 568
Montpelier, VT 05601-0568

DESIGN TEAM

LandWorks
228 Maple St., Suite 32
Middlebury, VT 05753
802.388.3011

Resource Systems Group
55 Railroad Row
White River Junction, VT 05001
802.295.4999

REVISIONS

DATE	DESCRIPTION	BY

TRAFFIC SIGN SUMMARY SHEET 8

SCALE:	N. T. S.	SHEET
DESIGNED BY:	DJG	TSSS8
DRAWN BY:	CDM	
CHECKED BY:	DJG	
DATE:	06/20/14	
PROJ. NO.:	STP5000(17)	

TRAFFIC SIGN SUMMARY SHEET 9

Sign Number	Sign Legend	Sign Dimensions			New & Salvages Signs				Exist Post		New Sign Posts														Sign Detail	
												Flanged Channel			Tubular Aluminum (in)				Tubular Steel (in)							
												lb/ft			3	4	4.0mod		3	3.5	4	5				
															lb/ft				lb/ft							
		EA	Width, in	Height, in	"A"	"B"	Salv Sign	Salv TIS	Retain	Salvage	No. of Posts	1.12	2	3	1.3	1.7	1.7	Found-ation	7.6	9	10.8	14.6	sign frame required	Remarks	Detail on Sheet No.	Std. Sheet Number
Pl.2 north-facing	Marketplace Garage Maximum Height 7 ft (2.13 m)	1 1	132 96	16 8	 5.33																			Marketplace Garage. Building mounted. Above Cherry St. entrance. Remove existing 2 hrs. free and clearance signs Paid for under pay item 900.620 S.P. (Internally Illuminated Sign) Non-illuminated sign paid for under item 675.20		
Pf.3 east/west facing	[parking symbol] [LED [Open/Full] [LED multi-directional arrow] [LED directional message]	1	36	156																				College St. Garage. Freestanding. At College St. entrance Pay for under pay item 900.620 S.P. (Parking ID Freestanding Sign) Remove existing Hx.17. Remove portion of existing concrete wall (and/or evaluate installation options prior to fabrication)		
Pl.3 south-facing	College Street Garage	1	240	28																				College St. Garage. Building mounted On south wall at end of College St. access drive. Paid for under pay item 900.620 S.P. (Internally Illuminated Sign)		
Ps.2 south-facing	[parking symbol]	1	54" Diameter																					College St. Garage. Building mounted. On south wall at end of College St. access drive. Building mounted. Paid for under pay item 900.620 S.P. (Internally Illuminated Sign)		
Pl.4 west-facing	College Street Garage Maximum Height 6'-5" (2 m) Exit Do Not Enter [do not enter symbols]	1 1 1	150 96 96	16 8 8	 5.33 5.33																			Combined with Ps.3. College St. Garage. Building mounted. Above Battery St. access drive. Remove existing 2 hrs. free and clearance signs Paid for under pay item 900.620 S.P. (Internally Illuminated Sign) Non-illuminated sign paid for under item 675.20		
Ps.3 west-facing	[parking symbol]	1	8" Diameter																					College St. Garage. Building mounted. Above Battery St. access drive. Combined with Pl.4 Paid for under pay item 900.620 S.P. (Internally Illuminated Sign)		
Pf.4 east/west facing	[parking symbol] [LED [Open/Full] [LED multi-directional arrow] [LED directional message]	1	36	156																				Lakeview Garage. Freestanding. At College St. entrance Pay for under pay item 900.620 S.P. (Parking ID Freestanding Sign) Remove existing Hx.17 Coordinate sign location w/ City of Burlington prior to installation.		
Pl.5 north-facing	Lakeview Garage Maximum Height 6'-5" (2 m) Exit Do Not Enter [do not enter symbols]	1 1 1	132 96 96	16 8 8	 5.33 5.33																			Paid for under pay item 900.620 S.P. (Internally Illuminated Sign) Lakeview Garage. Mounted on existing metal structure. Coordinate sign location w/ City of Burlington prior to installation. Non-illuminated signs paid for under pay item 675.20.		
Ps.4 east/west facing	[parking symbol] B-B	1	6' Diameter																					Lakeview Garage. Building mounted. Projecting from north wall of top deck. Coordinate location w/ City of Burlington prior to installation. Paid for under item 900.620 S.P. (Internally Illuminated Sign)		

SEE PLAN SHEETS FOR DETAILS ON SIGN GRAPHICS, POSTS, LOCATIONS, AND OTHER DETAILS.
FINAL POST LENGTHS ARE TO BE DETERMINED IN THE FIELD. POST SIZES ARE COMPUTED BASED ON INFORMATION FURNISHED ON THE STANDARD SHEETS AND THE TRAFFIC & SAFETY DIVISION'S "SIGN POST DESIGN GUIDELINE".
ALL SIGNS SHALL BE COMPLIANT WITH THE CONTRACT PLANS AND SPECIFICATIONS, LATEST MUTCD AND VTRANS STANDARDS.

Burlington

BURLINGTON WAYFINDING IMPROVEMENTS
STP 5000 (17)
BURLINGTON, VERMONT

CITY OF BURLINGTON
Community & Economic Development Office
Burlington City Hall
149 Church Street
Burlington, VT 05401
Ph: (802) 865-7144

Department of Public Works
PO Box 649
Burlington, VT 05402
Ph: (802) 863-9094

VT AGENCY OF TRANSPORTATION
Local Transportation Facilities
National Life Building, Drawer 33
Montpelier, VT 05633

FEDERAL HIGHWAY ADMINISTRATION
P. O. Box 568
Montpelier, VT 05601-0568

DESIGN TEAM

LandWorks
228 Maple St., Suite 32
Middlebury, VT 05753
802.388.3011

Resource Systems Group
55 Railroad Row
White River Junction, VT 05001
802.295.4999

REVISIONS

DATE	DESCRIPTION	BY

TRAFFIC SIGN SUMMARY SHEET 9

SCALE:	N.T.S.	SHEET
DESIGNED BY:	DJG	TSSS9
DRAWN BY:	CDM	
CHECKED BY:	DJG	
DATE:	06/20/14	
PROJ. NO.:	STP5000(17)	

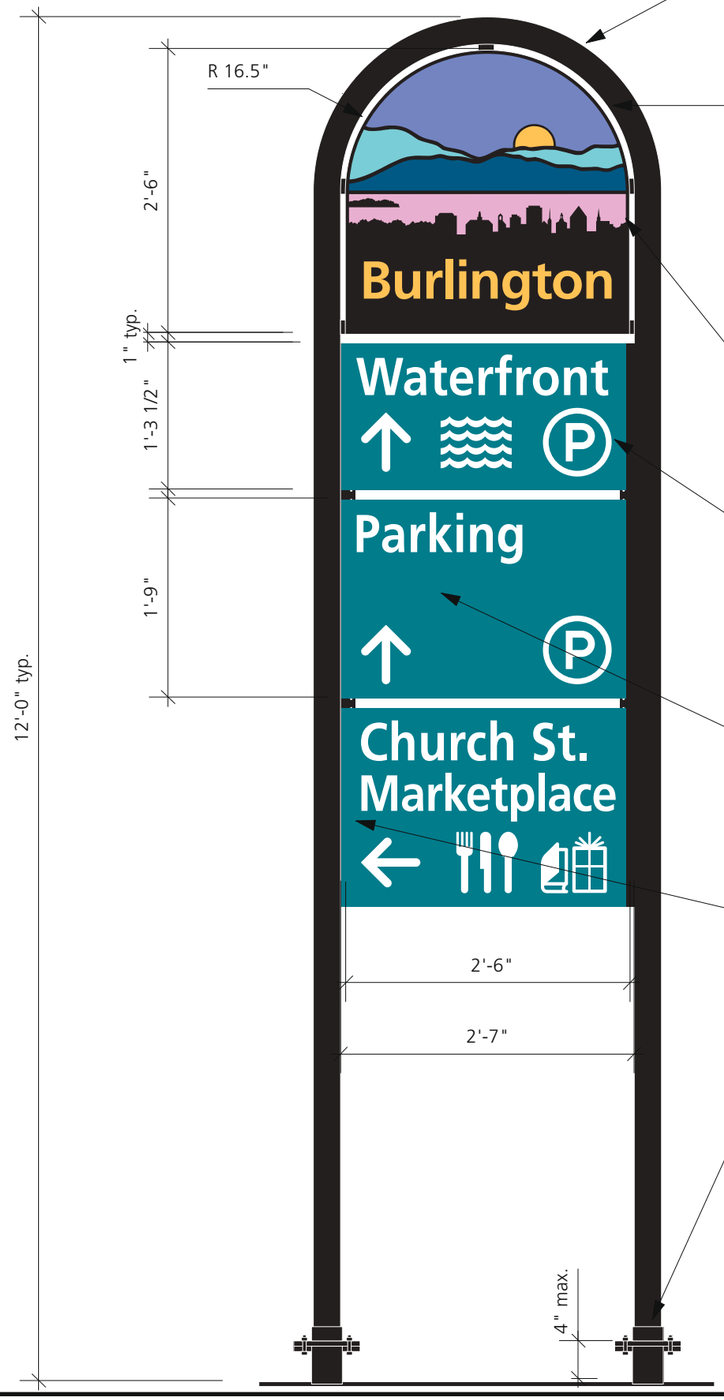

POST
3" O.D. curved aluminum pipe w/ welded flanges for sign panel attachment
Powder coated black

LOGO PANEL
City of Burlington Official Logo/Seal
(2) back to back single-sided .10" aluminum panels or equivalent steel panels
Logo graphic to be sub-surface embedded in powder coat through a heat and vacuum process on aliminum panel
Logo artwork varies by City District [Refer to Hairpin (H.) Sign Schedule]
Artwork to be provided by LandWorks

ALTERNATES
Contractor may propose alternate logo materials; Graphics must be highly UV and vandal resistant w/ ease of maintenance/cleaning (graffiti/stickers); Minimum 10 year lifespan; All artwork is vector-based

NTS

Logo panels bolted to five 2" x 2" x 1/8" steel tabs with 1/2" hole drilled
Welded to aluminum post
DESTINATION PANEL
.10" aluminum or equivalent steel panels
Powder coated blue-green RAL 5021(both sides)
Front side to be retroflective equivelent to RAL 5021
Two-line message (including symbols) = 1'-3 1/2"
Three-line message (including symbols) = 1'-9"
Symbol only message = 1'-0" (not shown)
All destination panels single-sided unless otherwise noted
NOTE: Welcome/Bienvenue panels to be powder coated black (both sides)
[Refer to Hairpin (H.) Sign Schedule for panel details]

DESTINATION PANEL GRAPHICS
All artwork to be provided by LandWorks
All graphics to be reflective white vinyl; 3M Diamond Grade, Nikkalite's Crystal Grade or EnduraLITE Super Engineer Grade
Name: Frutiger Bold, scaled horizontally 90%, 4" caps
Marketplace: Frutiger Bold, scaled horizontally 90%, 3.75" caps
Arrow: 5 1/4" x 6 1/4"
Symbol: Sizes vary; Parking symbol = 6 1/2" dia.
[Refer to Hairpin (H.) Sign Schedule for messages for each sign]

Destination panels pre-drilled and bolted to two 2" x 74" x 1/8" steel flanges continuously welded to aluminum post with 1/2" holes drilled 1-1/2" O.C. along entire length
Hardware to be tamper resistant stainless steel; All joinery should avoid direct aluminum to steel contact unless corrosion or discoloration can be avoided by substiture hardware
Standard flange shown; Allows for (2) three-line panels and (1) two-line panel
[Refer to Hairpin (H.) Sign Schedule]

Multidirectional slip base maximum 4" projection incidental to item 675.43 - foundation for tubular steel post. See VTRANS standard E-163

Note:
All graphics to be supplied and approved prior to installation.
All wayfinding signs, including materials, fonts, types, sizes spacing and colors shall be in acordance with *Getting Around Burlington: A Plan for the City Signing, Wayfinding and Information*. Publication December 2008 Update.
Color specifications:

Sky: Pantone 272 CVC (RGB: 137, 119, 186)
Sun: Pantone 136 CVC (RGB: 252, 191, 73)
Mountains (blue): Pantone 319 CVC (RGB 76, 206, 209)
Mountains (green): Pantone 340 CVC (RGB 0, 153, 119)
Lake: Pantone 244 CVC (RGB 237, 160, 211)
Skyline: Black (RGB 0, 0, 0)
Outlines: Black (RGB 0, 0, 0)
Type: Pantone 136 CVC (RGB: 252, 191, 73)

Posts: Powder coated black (RGB 0, 0, 0)

Destination Panels:
Background: Powder coated blue-green RAL 5021 (RGB: 26, 122, 99)
Text and Symbols: Retroreflective white vinyl

Destination Panel w/ LED arrow

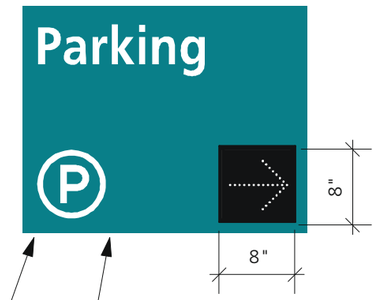

Typical destination panel w/ integrated LED multi-directional arrow display; 2 1/2" thick LED cabinet

NOTES re: LED DISPLAYS

Display to be 1 row of super bright, narrow viewing angle LEDs in bright white
Messages "blankout" when turned off, eliminating confusion, with long life, solid state lighting
Electrical: Integrated solid state power supply, photocell for auto photodimming standard voltage 120 VAC, UL/CUL approved for wet locations
Construction: Single faced sign, cabinet to be 10 gauge aluminum with welded seams, continuous hinged door with stainless steel door clamps, face material to be impact resistant, smoke tinted Polycarbonate 1/4" thick.

Cabinet and any additional trimwork to be powder coated RAL 5021

LED display to be programmed as outlined in Hairpin (H.) Sign Schedule for signs H.11, H.13 and H.19

To be integrated into existing City of Burlington Public Works parking revenue control system by Skidata

Communication system to be cellular

Contractor to coordinate w/ Trans-Tech and Burlington Dept. of Public Works to implement LED components

System details to be provided to Design Team for review and approval

OPTION: Solar powered LED display [See Sheet 1.3 Sign Type H. "Hairpin" Directional - Solar Powered LED]

Burlington Wayfinding Improvements

2014

City of Burlington
Department of Public Works
645 Pine St #A
Burlington, VT 05401
802.863.9094

VT Agency of Transportation
One National Life Drive
Montpelier, VT 05633

Federal Highway Administration
PO Box 568
Montpelier, VT 05601

Design Team

LandWorks
228 Maple St., Suite 32
Middlebury, VT 05753
802.388.3011

Resource Systems Group
55 Railroad Row
White River Jct., VT 05001
802.295.4999

Revisions

Date	Description	By

WAYFINDING SPECIFICATIONS SHEET 1.1

SIGN TYPE H.
"Hairpin" Directional - typical

Scale: 3/4" = 1'
Drawn by: MH
Checked by: DR
Date: 4/18/14
Project: Burlington Wayfinding

Typical Panel Layout "Three-Line"

Typical Panel Layout "Two-Line"

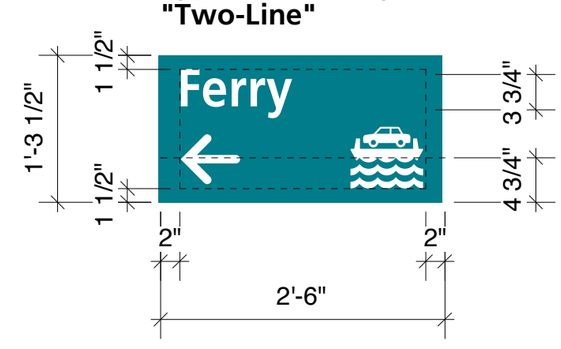

Burlington Wayfinding Improvements

2014

City of Burlington
Department of Public Works
645 Pine St #A
Burlington, VT 05401
802.863.9094

VT Agency of Transportation
One National Life Drive
Montpelier, VT 05633

Federal Highway Administration
PO Box 568
Montpelier, VT 05601

Design Team

LandWorks
228 Maple St., Suite 32
Middlebury, VT 05753
802.388.3011

Resource Systems Group
55 Railroad Row
White River Jct., VT 05001
802.295.4999

Revisions

WAYFINDING SPECIFICATIONS SHEET 1.2

SIGN TYPE H.
"Hairpin" Directional - Additional Examples

Scale: 3/4" = 1'
Drawn by: MH
Checked by: DR
Date: 4/18/14
Project: Burlington Wayfinding

OPTION: LED multi-directional arrow display to be powered by solar energy
Integrated photovoltaic system to be sized appropriately for use (panel size may vary)

Solar Option 1

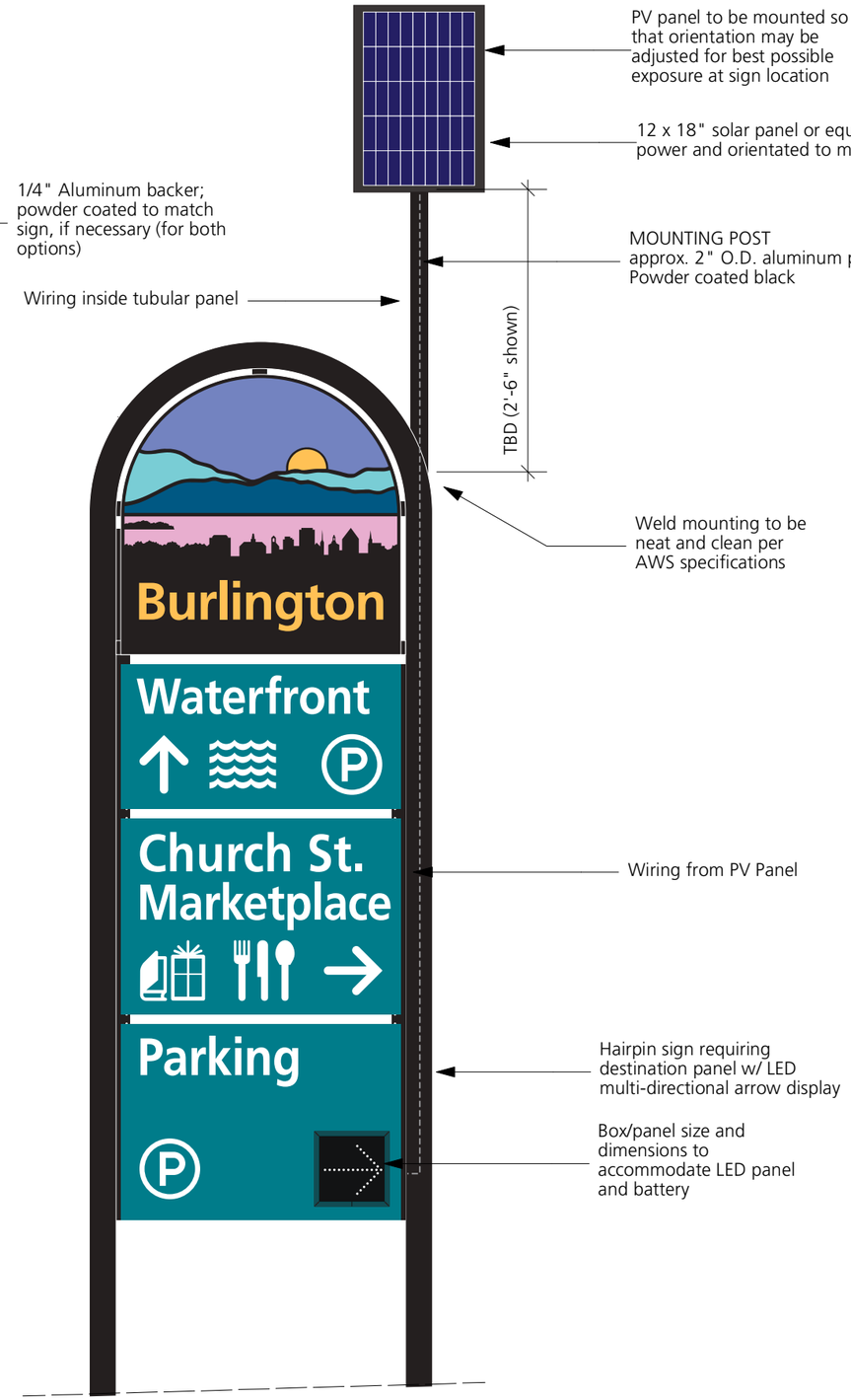

Solar Option 2

Notes: All callouts apply to both solar panel options. LED panel and product as noted on Sheet 1.1 of this set.

Contractor to oversee installation of products, materials and wiring to ensure full operation and to be in compliance with any applicable city, state or national building and electrical codes. (i.e. NFPA 70 National Electric Code)

Notes for Solar Panel and Installation:

1. Solar Panel to be 12X18" or 16X20" maximum size and of sufficient voltage to power Trans-Tech (or equal) LED directional element.

2. Solar panel or mounting assembly shall be designed so as to be removable for repair or replacement of panel and and associated elements.

3. Sufficient battery storage for nighttime and inclement weather LED sign lighting shall be provided and housed in LED sign "box". Note that any wiring shall be located within tubular post(s) and provision in the sign post shall be made for wiring, properly protected and insulated, to exit post and enter LED sign "box".

4. Contractor to provide final design and specifications for solar panel and installation for owner/designer review and approval.

Burlington Wayfinding Improvements

2014

City of Burlington
Department of Public Works
645 Pine St #A
Burlington, VT 05401
802.863.9094

VT Agency of Transportation
One National Life Drive
Montpelier, VT 05633

Federal Highway Administration
PO Box 568
Montpelier, VT 05601

Design Team

LandWorks
228 Maple St., Suite 32
Middlebury, VT 05753
802.388.3011

Resource Systems Group
55 Railroad Row
White River Jct., VT 05001
802.295.4999

Revisions

WAYFINDING SPECIFICATIONS SHEET 1.3

SIGN TYPE H.
"Hairpin" Directional - Solar Powered LED

Scale: 3/4" = 1'
Drawn by: MH
Checked by: DR
Date: 4/18/14
Project: Burlington Wayfinding

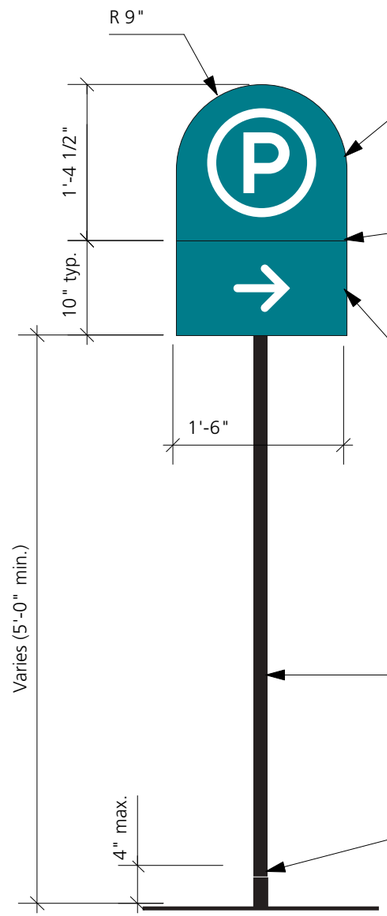

HEADER PANEL
.10" aluminum panel
Powder coated RAL 5021 (both sides)
Pre-drilled and bolted to pre-drilled square post
Hardware to be tamper resistant stainless steel
All artwork to be provided by LandWorks
All graphics to be retroreflective white vinyl; 3M Diamond Grade,
Nikkalite's Crystal Grade or EnduraLITE Super Engineer Grade
Symbol: 11 1/2" dia.

Header panel and message panel butted together

MESSAGE PANEL
.10" aluminum panel
Powder coated RAL 5021 (both sides)
Pre-drilled and bolted to pre-drilled square post
Hardware to be tamper resistant stainless steel
All artwork to be provided
All graphics to be retroreflective white vinyl; 3M Diamond Grade,
Nikkalite's Crystal Grade or EnduraLITE Super Engineer Grade

All signs single-sided unless otherwise noted
[Refer to Small Directional (S.) Sign Schedule]
Double-sided signs to have single-sided panels mounted on opposite sides of post

NOTE: Total post height and clearance vary based on scheduled panels/messages [Refer to Small Directional (S.) Sign Schedule and Panel Sizes below]

Clearance to be 7'-0" where pedestrian and/or turning movements occur below sign

POST
2" square 14 gauge pre-drilled "off-the-shelf" aluminum post
OPTION 1: powder coated black
OPTION 2: galvanized steel

POST ANCHOR
Square 12 gauge galvanized steel pre-drilled sign post anchor w/ corner bolt
See VTrans Design Standard T-45 for details

Panel Sizes

All artwork to be provided by LandWorks

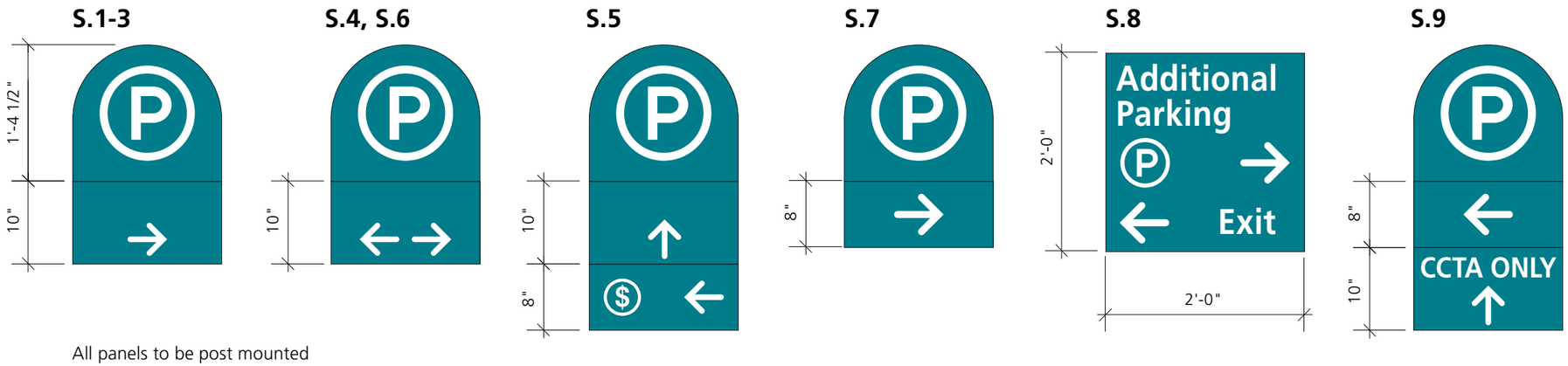

All panels to be post mounted

Burlington Wayfinding Improvements

2014

City of Burlington
Department of Public Works
645 Pine St #A
Burlington, VT 05401
802.863.9094

VT Agency of Transportation
One National Life Drive
Montpelier, VT 05633

Federal Highway Administration
PO Box 568
Montpelier, VT 05601

Design Team

LandWorks
228 Maple St., Suite 32
Middlebury, VT 05753
802.388.3011

Resource Systems Group
55 Railroad Row
White River Jct., VT 05001
802.295.4999

Revisions

WAYFINDING SPECIFICATIONS SHEET 2

SIGN TYPE S.
Small Directional

Scale: 3/4" = 1'
Drawn by: MH
Checked by: DR
Date: 4/18/14
Project: Burlington Wayfinding

Freestanding double-sided sign w/ internally illuminated push-through graphics and custom LED displays

CABINET EXTERIOR
Curved aluminum sheet; Approx 3/8" thick (1/4" min. - 1/2" max.)
Edges raised 3/4" beyond parking symbol graphics and sign cabinet faces; Raised edges to be rounded and powder coated black

INTERNALLY ILLUMINATED PARKING SYMBOL
Push-through graphic; Milk white acrylic 'ring' and 'P' to be raised 3/4" from symbol background and illuminated with white LED lights
All artwork to be provided by LandWorks
Symbol background to be aluminum; Powder coated RAL 5021
Illumination to be consistent across all surfaces and edges; No "hot spots" or dark areas
Entire symbol raised 2 1/2" from sign cabinet face and to be bordered with raised edge
powder coated black aluminum to match cabinet exterior

ALL INTERNALLY ILLUMINATED LETTERS AND SYMBOLS
Lettering and "illuminated ring" around sign perimeter (as appropriate per individual sign) to be internally lit by continuous energy efficient flexible LED light strips designed for outdoor signage applications; light strips to be configured and applied in a manner so as to provide continuous and uniform lighting of the specific lettering or "ring" band around sign to be lit
Proposed LED lighting wattage range to be about 2.5 to 3 watts per linear foot of the light strip or of sufficient wattage to provide consistent and uniform lighting withough any spots of brighter or darker appearance
LED strips to be mounted internally with sign cabinet/box as appropriate and necessary to be proximate to acrylic lettering and "ring" material for safe and sufficient lighting in accordance with local and national electrical codes

INTERNALLY ILLUMINATED LETTERING
Milk white acrylic push-through lettering raised 3/4" from sign cabinet face and illuminated with white LED lights to match color of parking symbol
illumintation to provide consistent and uniform lighting withough any spots of brighter or darker appearance across all surfaces and edges
Frutiger Bold; All artwork to be provided by LandWorks

SIGN CABINET FACE
Aluminum; Powder coated RAL 5021
Must be reinforced and/or thick enough gauge to prevent buckling/denting
To be removable to allow access to cabinet interior and future LED retrofit
Internal access may also be provided on side of cabinet exterior as needed
Any access hatches and/or surface mounted fasteners to be flush and finished to match

LED OPEN/FULL DISPLAY
Illumination: Row of 1 super bright, narrow viewing angle LEDs in bright white
Messages "blankout" when turned off, eliminating confusion, with long life, solid state lighting
Electrical: Integrated solid state power supply, photocell for auto photodimming standard voltage 120 VAC, UL/CUL approved for wet locations
Construction: Single faced sign, slim line continuous, corrosion resistent, aluminum housing 2.5" deep, face material to be impact resistant, smoke tinted Polycarbonate 1/4" thick
Finish: Powder coated RAL 5021 to match outer cabinet

All LED DISPLAYS
Cabinets and any additional trimwork to be powder coated RAL 5021
To be programmed as outlined in Parking-freestanding (Pf.) Sign Schedule
To be integrated into existing City of Burlington Public Works parking revenue control system by Skidata, Communication system to be cellular, Contractor to coordinate w/ Trans-Tech and Burlington Dept. of Public Works to implement LED components
System details to be provided to Design Team for review and approval

LED ARROW DISPLAY
Illumination: Row of 3 super bright, narrow viewing angle LEDs in bright white
Messages "blankout" when turned off, eliminating confusion, with long life, solid state lighting
Electrical: Integrated solid state power supply, photocell for auto photodimming standard voltage 120 VAC, UL/CUL approved for wet locations
Construction: Single faced sign, cabinet to be 10 gauge aluminum with welded seams, continuous hinged door with stainless steel door clamps, face material to be impact resistant, smoke tinted Polycarbonate 1/4" thick. Finish: Powder coated RAL 5021 to match outer cabinet

LED TEXT DISPLAY
Illumination: Row of 1 super bright, narrow viewing angle LEDs in bright white
Messages "blankout" when turned off, eliminating confusion, with long life, solid state lighting.
Scrolls instructions alternating in English and French
Electrical: Integrated solid state power supply, photocell for auto photodimming standard voltage 120 VAC, UL/CUL approved for wet locations
Construction: Single faced sign, slim line continuous, corrosion resistent, aluminum housing 2.5" deep, face material to be impact resistant, smoke tinted Polycarbonate 1/4" thick
Finish: Powder coated RAL 5021 to match outer cabinet

BIKE PARKING SYMBOL
Reflective white vinyl; 3M Diamond Grade or approved equal; Artwork to be provided by LandWorks

INSTALLATION
Anchor bolt/footing detail TBD by Contractor, Must allow entire sign cabinet to be removed for repair/replacement

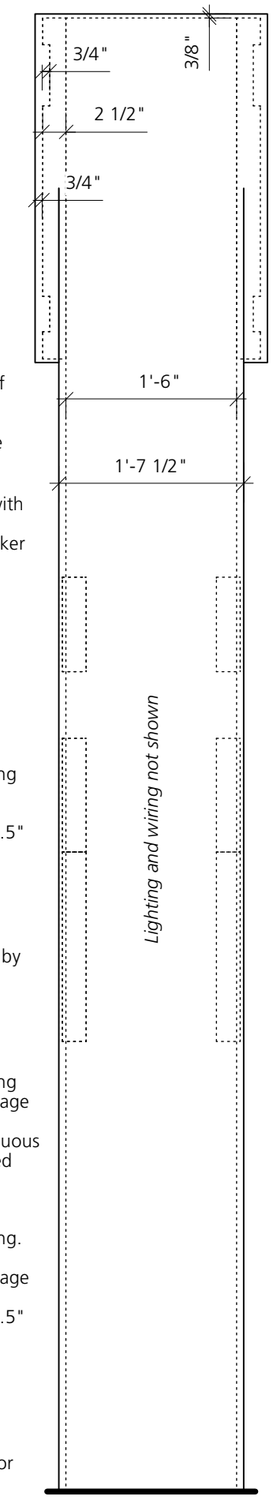

Burlington Wayfinding Improvements

2014

City of Burlington
Department of Public Works
645 Pine St #A
Burlington, VT 05401
802.863.9094

VT Agency of Transportation
One National Life Drive
Montpelier, VT 05633

Federal Highway Administration
PO Box 568
Montpelier, VT 05601

Design Team

LandWorks
228 Maple St., Suite 32
Middlebury, VT 05753
802.388.3011

Resource Systems Group
55 Railroad Row
White River Jct., VT 05001
802.295.4999

Revisions

NOTE:
1. LED display dimensions may vary slightly depending on availability at time of construction
2. Marketplace Garage to have "2HRS FREE" removed from signs

WAYFINDING SPECIFICATIONS SHEET 3

Sign Type Pf.
Parking ID Freestanding

Scale: 3/4" = 1'
Drawn by: MH
Checked by: DR
Date: 4/18/14
Project: Burlington Wayfinding

Pl.1 and Pl.2 Pl.1 and Pl.2 to be installed on Marketplace Garage exterior; Centered above Bank St. and Cherry St. entrances
[Refer to Parking Facility Sign Schedule: Parking ID - Lettering (Pl.) and Parking ID - Symbol (Ps.)]

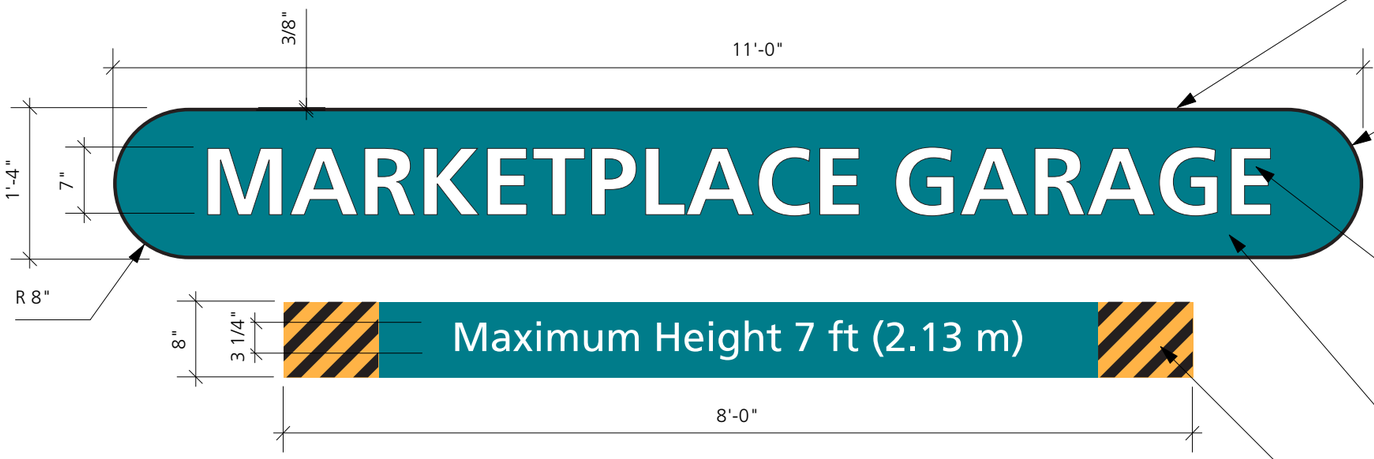

Building mounted single-sided sign w/ internally illuminated push-through lettering
Attachment to building to be hidden within cabinet

CABINET EXTERIOR
Curved aluminum sheet; Approx 3/8" thick (1/4" min. - 1/2" max.)
Edges raised 3/4" beyond sign cabinet face; Raised edges to be rounded
Powder coated black
All artwork to be provided

Cabinet depth TBD by Contractor; Subject to review by Design Team; Preferred 6" max.

INTERNALLY ILLUMINATED LETTERING
Push-through lettering; Milk white acrylic to be raised 3/4" from cabinet face and illuminated with white LED lights
Illumination to be consistent across all surfaces and edges; No "hot spots" or dark areas
Frutiger Bold; All artwork to be provided by LandWorks

SIGN CABINET FACE
Aluminum; Powder coated RAL 5021
Must be reinforced and/or thick enough gauge to prevent buckling/denting
To be removable to allow access to cabinet interior and future LED retrofit
Internal access may also be provided on side of cabinet exterior as needed
Any access hatches and/or surface mounted fasteners to be flush and finished to match

CLEARANCE PANEL
1/8" aluminum; Powder coated RAL 5021
Black, reflective yellow and reflective white vinyl graphics
Frutiger Roman; All artwork to be provided by LandWorks
Vinyl to be ASTM type III sheeting minimum

Ps.1 Ps.1 signs to be installed on Marketplace Garage exterior; Near top of east face of Bank St Tower
[Refer to Parking Facility Sign Schedule: Parking ID - Lettering (Pl.) and Parking ID - Symbol (Ps.)]

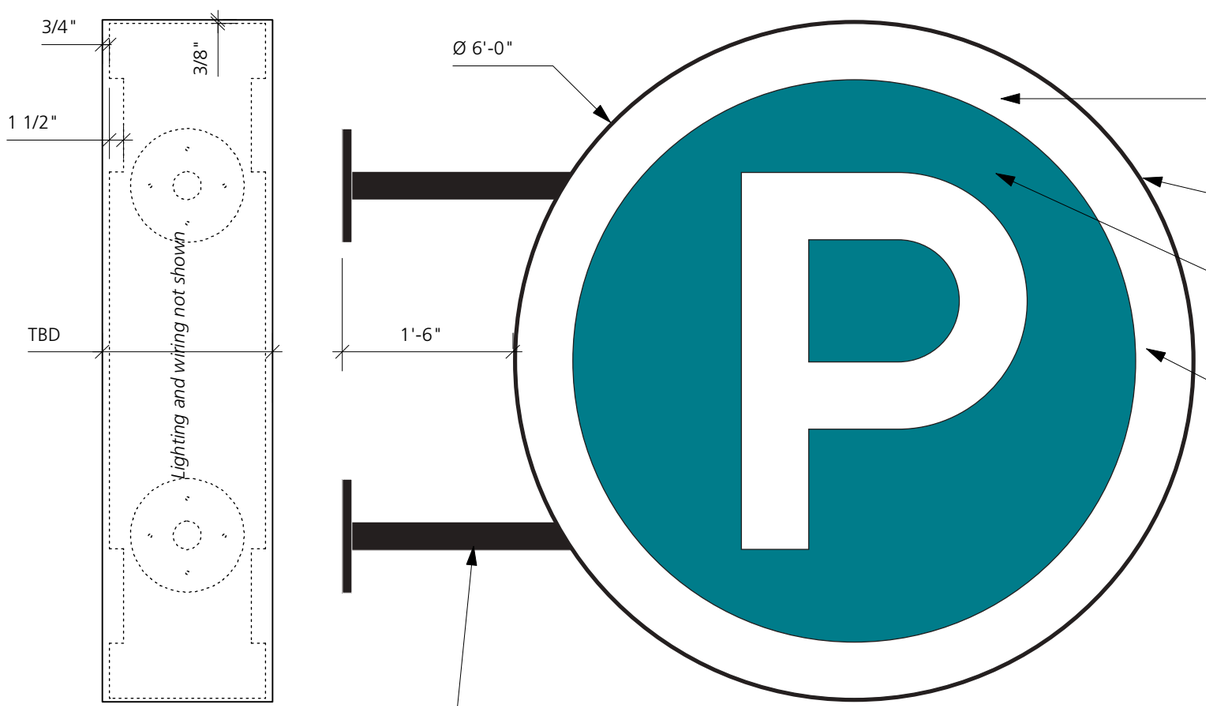

Building mounted double-sided sign w/ internally illuminated push-through graphic

CABINET EXTERIOR
Curved aluminum sheet; Approx 3/8" thick (1/4" min. - 1/2" max.)
Edges raised 3/4" beyond parking graphic face; Raised edges to be rounded
Powder coated black
All artwork to be provided

Cabinet depth TBD by Contractor; Subject to review by Design Team

SIGN CABINET FACE
Aluminum; Powder coated RAL 5021
Must be reinforced and/or thick enough gauge to prevent buckling/denting

INTERNALLY ILLUMINATED PARKING SYMBOL
Push-through graphic; Milk white acrylic 'ring' and 'P' to be raised 1 1/2" from symbol background and illuminated with white LED lights
Symbol background to be aluminum; Powder coated RAL 5021
Illumination to be consistent across all surfaces and edges; No "hot spots" or dark areas

ALL INTERNALLY ILLUMINATED LETTERS AND SYMBOLS
Lettering and "illuminated ring" around sign perimeter (as appropriate per individual sign) to be internally lit by continuous energy efficient flexible LED light strips designed for outdoor signage applications; light strips to be configured and applied in a manner so as to provide continuous and uniform lighting of the specific lettering or "ring" band around sign to be lit
Proposed LED lighting wattage range to be about 2.5 to 3 watts per linear foot of the light strip or of sufficient wattage to provide consistent and uniform lighting withough any spots of brighter or darker appearance
LED strips to be mounted internally with sign cabinet/box as appropriate and necessary to be proximate to acrylic lettering and "ring" material for safe and sufficient lighting in accordance with local and national electrical codes

INSTALLATION
Mounting details TBD by Contractor
Shown as (2) 3" dia. tubes w/ welded flanges

Wiring to be hidden inside mounting system

Sign to be installed on east face of Bank St. stair tower of Marketplace Garage centered between top deck and top of stair tower and projecting from east face of tower

Burlington Wayfinding Improvements

2014

City of Burlington
Department of Public Works
645 Pine St #A
Burlington, VT 05401
802.863.9094

VT Agency of Transportation
One National Life Drive
Montpelier, VT 05633

Federal Highway Administration
PO Box 568
Montpelier, VT 05601

Design Team

LandWorks
228 Maple St., Suite 32
Middlebury, VT 05753
802.388.3011

Resource Systems Group
55 Railroad Row
White River Jct., VT 05001
802.295.4999

Revisions

Date	Description	By

WAYFINDING SPECIFICATIONS SHEET 4

MARKETPLACE GARAGE

SIGNS Pl.1-2 & Ps.1
Parking ID-lettering and Parking ID-symbol

Scale: 3/4" = 1'
Drawn by: MH
Checked by: DR
Date: 4/18/14
Project: Burlington Wayfinding

Pl.3 & Ps.2

Pl.3 and Ps.2 to be installed on College St Garage exterior; On south face of top deck wall; Visible from access drive/College St.
[Refer to Parking Facility Sign Schedule: Parking ID - Lettering (Pl.) and Parking ID - Symbol (Ps.)]

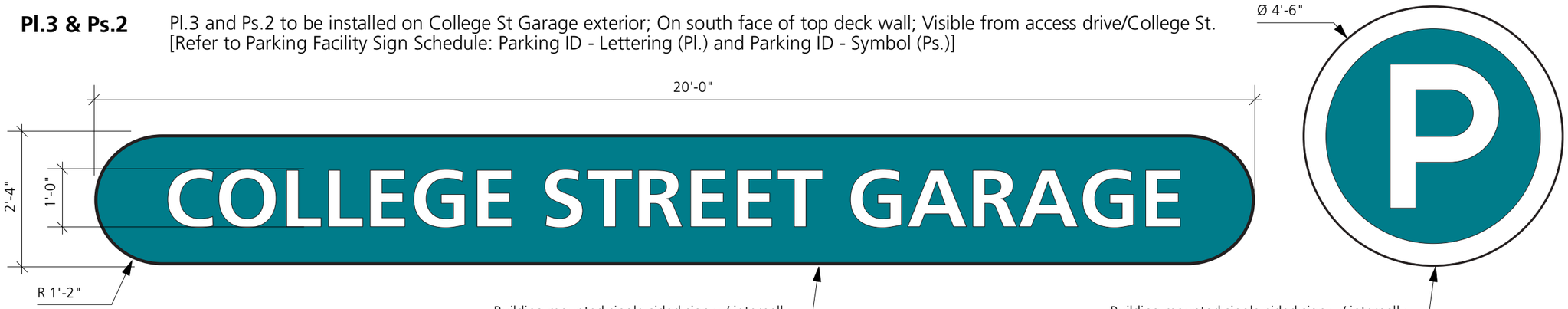

Building mounted single-sided sign w/ internally illuminated push-through lettering

[See Wayfinding Specifications Sheet 4 for typical details]

Building mounted single-sided sign w/ internally illuminated push-through graphic

[See Wayfinding Specifications Sheet 4 for typical details]

Pl.3 to be installed on concrete surface; Ps.2 to be installed on yellow brick surface

Pl.4/Ps.3

Pl.4/Ps.3 (combined) to be installed on College St Garage exterior; Centered above Battery St entrance
[Refer to Parking Facility Sign Schedule: Parking ID - Lettering (Pl.) and Parking ID - Symbol (Ps.)]

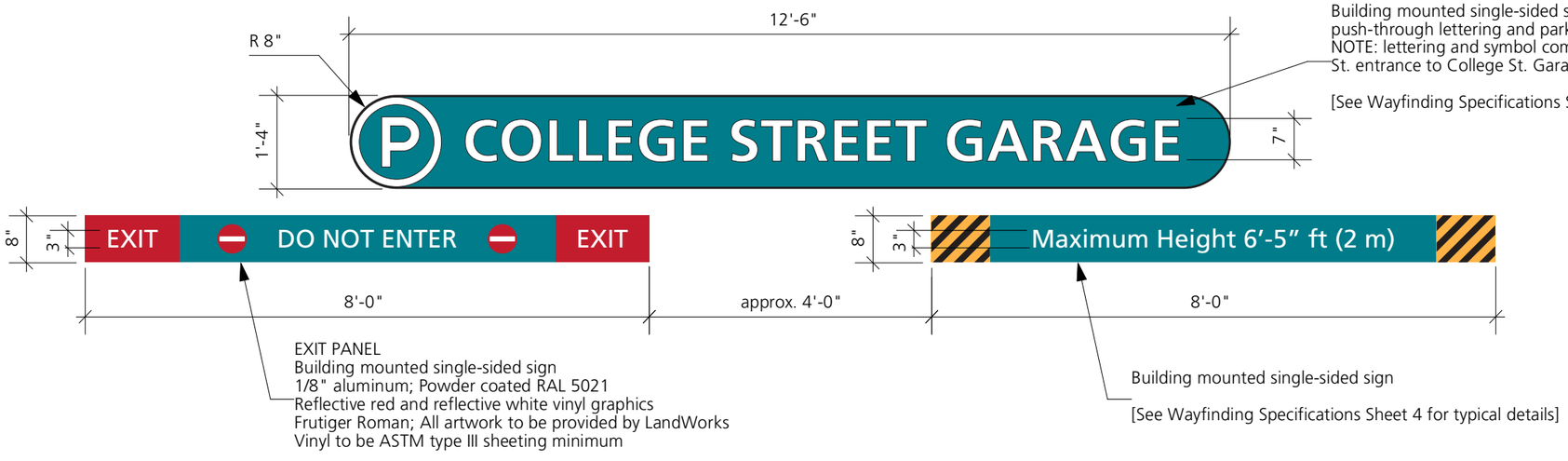

Building mounted single-sided sign w/ internally illuminated push-through lettering and parking symbol graphic
NOTE: lettering and symbol combined into same sign for Battery St. entrance to College St. Garage

[See Wayfinding Specifications Sheet 4 for typical details]

EXIT PANEL
Building mounted single-sided sign
1/8" aluminum; Powder coated RAL 5021
Reflective red and reflective white vinyl graphics
Frutiger Roman; All artwork to be provided by LandWorks
Vinyl to be ASTM type III sheeting minimum

Building mounted single-sided sign

[See Wayfinding Specifications Sheet 4 for typical details]

Exit and entrance panels to be centered over corresponding lanes

Burlington Wayfinding Improvements

2014

City of Burlington
Department of Public Works
645 Pine St #A
Burlington, VT 05401
802.863.9094

VT Agency of Transportation
One National Life Drive
Montpelier, VT 05633

Federal Highway Administration
PO Box 568
Montpelier, VT 05601

Design Team

LandWorks
228 Maple St., Suite 32
Middlebury, VT 05753
802.388.3011

Resource Systems Group
55 Railroad Row
White River Jct., VT 05001
802.295.4999

Revisions

Date	Description	By

WAYFINDING SPECIFICATIONS SHEET 5

COLLEGE STREET GARAGE

SIGNS Pl.3-4 & Ps.2-3
Parking ID-lettering and Parking ID-symbol

Scale: 3/4" = 1'
Drawn by: MH
Checked by: DR
Date: 4/18/14
Project: Burlington Wayfinding

Pl.5 Pl.5 to be installed at Lakeview Garage; On existing metal entry structure at Cherry St. entrance
[Refer to Parking Facility Sign Schedule: Parking ID - Lettering (Pl.) and Parking ID - Symbol (Ps.)]

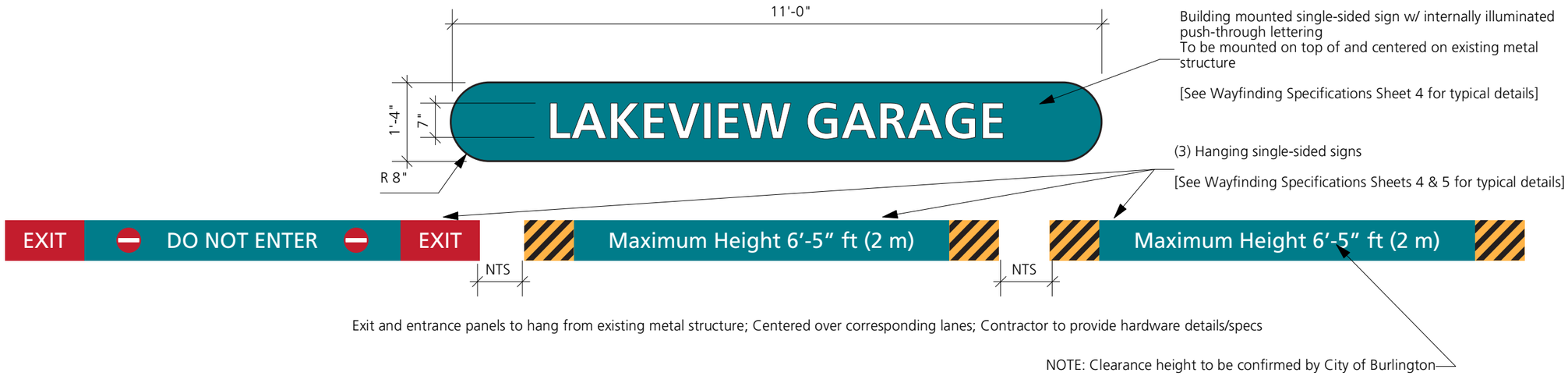

Ps.4 Ps.4 to be installed Lakeview Garage exterior; On north face of top deck wall; Perpendicular to Cherry St.
[Refer to Parking Facility Sign Schedule: Parking ID - Lettering (Pl.) and Parking ID - Symbol (Ps.)]

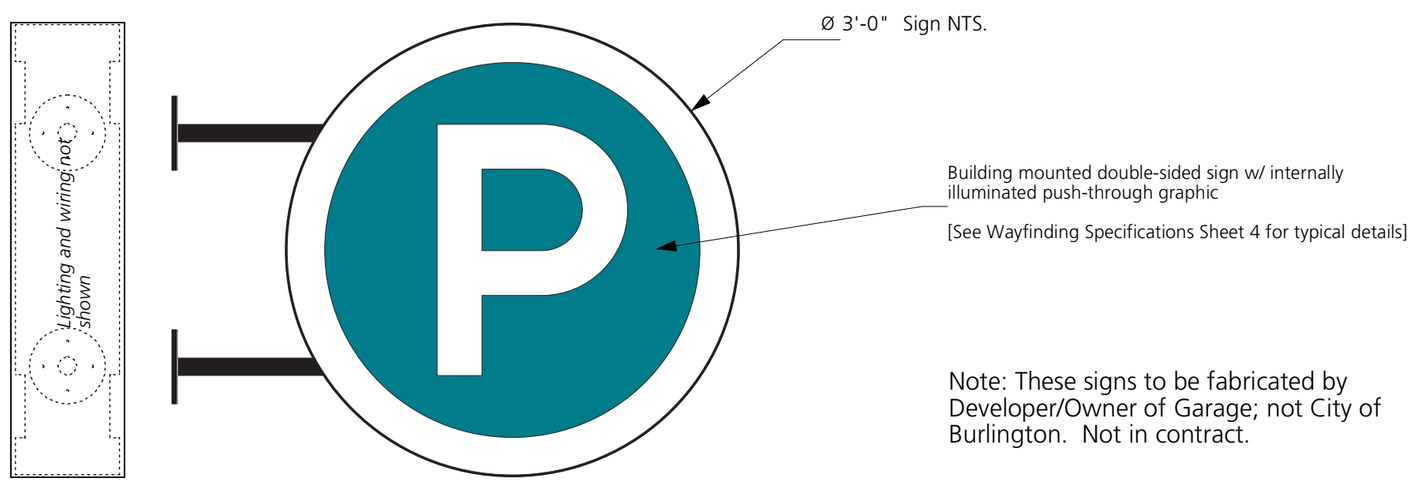

Burlington Wayfinding Improvements

2014

City of Burlington
Department of Public Works
645 Pine St #A
Burlington, VT 05401
802.863.9094

VT Agency of Transportation
One National Life Drive
Montpelier, VT 05633

Federal Highway Administration
PO Box 568
Montpelier, VT 05601

Design Team

LandWorks
228 Maple St., Suite 32
Middlebury, VT 05753
802.388.3011

Resource Systems Group
55 Railroad Row
White River Jct., VT 05001
802.295.4999

Revisions

WAYFINDING SPECIFICATIONS SHEET 6

LAKEVIEW GARAGE

SIGNS Pl.5 & Ps.4
Parking ID-lettering and Parking ID-symbol

Scale: 3/4" = 1'
Drawn by: MH
Checked by: DR
Date: 4/18/14
Project: Burlington Wayfinding

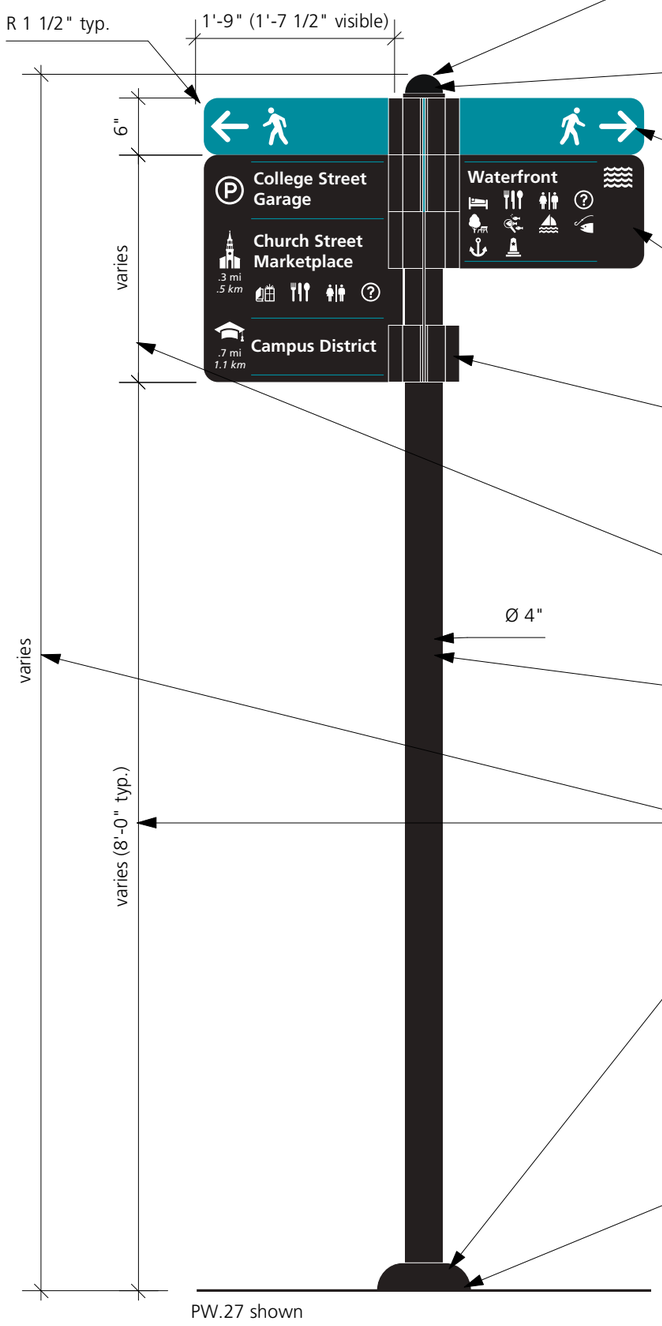

PW.27 shown

MODULAR SIGN SYSTEM
Sign system to follow specs as designed. If using a prefabricated system design must be approved by LandWorks. and adhere to the customized colors, graphics, and panel dimensions set forth

DOMED POST CAP
Cast aluminum; Powder coated black

GRAPHIC PANEL (custom size/shape)
Directional message
1/4" aluminum; Powder coated RAL 5021
White vinyl graphics; All artwork to be provided by LandWorks

GRAPHIC PANEL (custom size/shape)
Destination message(s)
1/4" aluminum; Powder coated black
White vinyl graphics w/ blue-green pinstripes; All artwork to be provided by LandWorks
[Refer to Pedestrian Wayfinding (PW.) Sign Schedule for messages for each sign]

CLAMP
6" Circular 180° and 6" Circular 90°
Aluminum; Powder coated black
Qty. of each varies per sign
[Refer to Pedestrian Wayfinding (PW.) Sign Schedule]

Refer to Pedestrian Wayfinding (PW.) Sign Schedule for panel qty. and heights

CIRCULAR POST
Aluminum; Powder coated black
Height varies per sign
[Refer to Pedestrian Wayfinding (PW.) Sign Schedule]

Refer to Pedestrian Wayfinding (PW.) Sign Schedule for post heights and clearance requirements
Typical clearance includes addition 1'-0" to allow for future graphic panel(s)

COVER PLATE/ESCUTCHEON
Fiberglass; Painted black

INSTALLATION
In-ground or surface mount TBD based on site conditions for each sign
Requires Circular Mounting Foot for surface mount applications

NOTE:
Install on triangular slip-base as needed based on final locations and proximity to traffic flow
Specific locations TBD by City of Burlington
Poz-Loc by Northwest Pipe Co. (www.pozloc.com), Dent Universal Triangular Base by Dent Breakaway Industries, Inc. (www.dentbreakaway.com) or XCESSORIEs SQUARED DEVELOMENT & MFG., INC. (www.x-sqrd.com)
See also VTrans Design Standard E-163

ALTERNATES
Contractor may provide alternate slip base or break away systems; Must be FHWA approved and allow sign to be removed from base/footing for repair or replacement

Plan View (typ.)

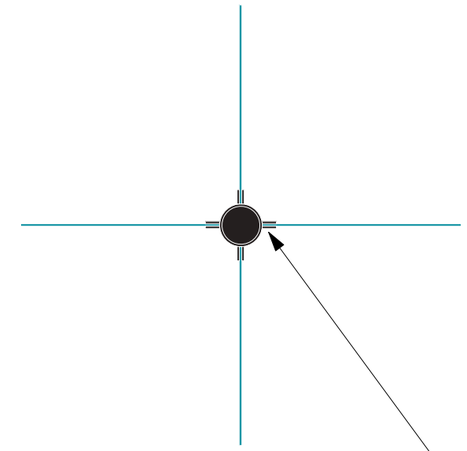

Graphic panels "clocked" to be parallel with path toward specific destination
[Refer to Pedestrian Wayfinding (PW.) Sign Schedule for directions for each panel]

Install set screws as needed to lock direction

Burlington Wayfinding Improvements

2014

City of Burlington
Department of Public Works
645 Pine St #A
Burlington, VT 05401
802.863.9094

VT Agency of Transportation
One National Life Drive
Montpelier, VT 05633

Federal Highway Administration
PO Box 568
Montpelier, VT 05601

Design Team

LandWorks
228 Maple St., Suite 32
Middlebury, VT 05753
802.388.3011

Resource Systems Group
55 Railroad Row
White River Jct., VT 05001
802.295.4999

Revisions

WAYFINDING SPECIFICATIONS SHEET 7.1

SIGN TYPE PW.
Pedestrian Wayfinding - typical

Scale: 3/4" = 1'
Drawn by: MH
Checked by: DR
Date: 4/18/14
Project: Burlington Wayfinding

Additional PW. Examples Scale: 1/2" = 1'

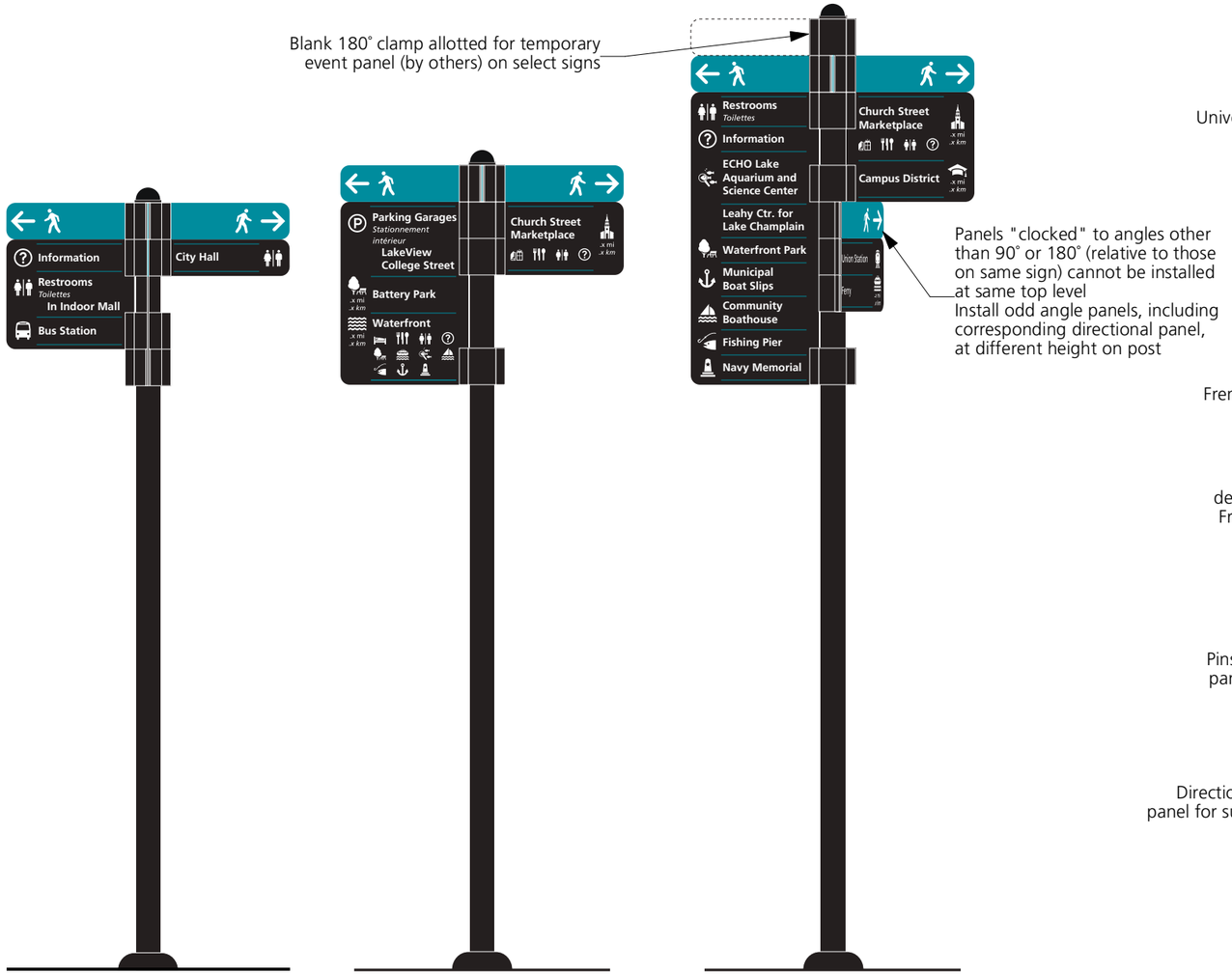

PW.14 shown PW.18 shown PW.29 shown

PW. Graphic Panels

Scale: 1 1/2" = 1'

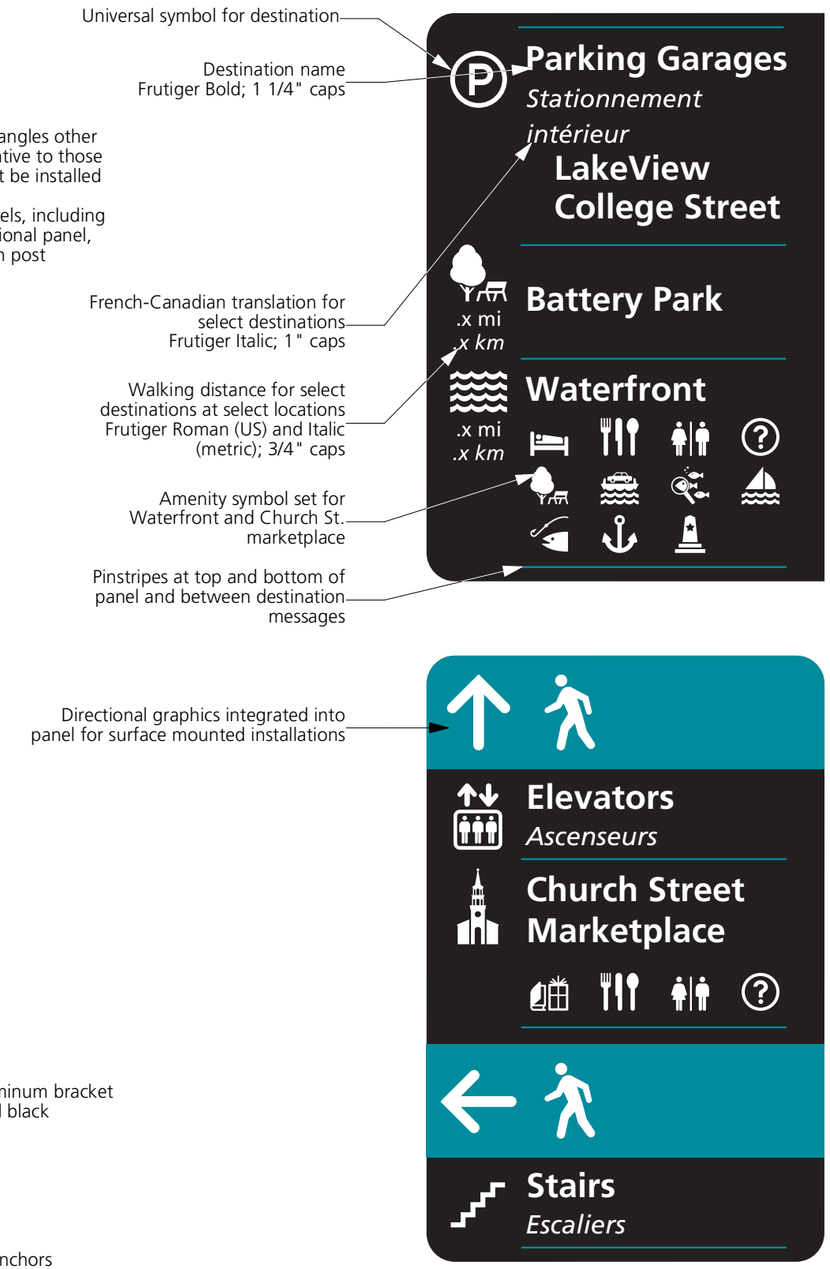

Custom PW. Mounting Options Scale: 3" = 1'

Existing pole mount

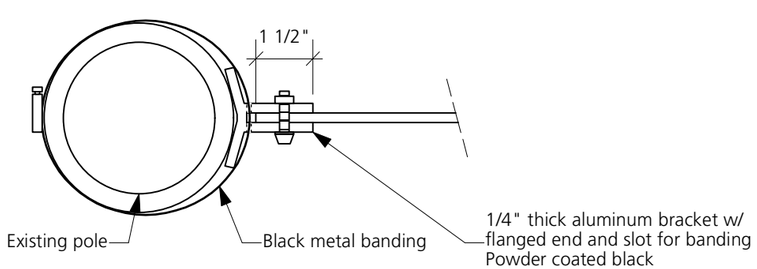

Building/wall mount

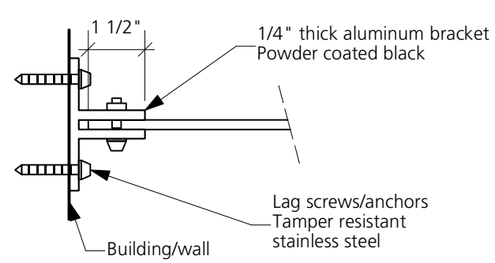

Burlington Wayfinding Improvements

2014

City of Burlington
Department of Public Works
645 Pine St #A
Burlington, VT 05401
802.863.9094

VT Agency of Transportation
One National Life Drive
Montpelier, VT 05633

Federal Highway Administration
PO Box 568
Montpelier, VT 05601

Design Team

LandWorks
228 Maple St., Suite 32
Middlebury, VT 05753
802.388.3011

Resource Systems Group
55 Railroad Row
White River Jct., VT 05001
802.295.4999

Revisions

WAYFINDING SPECIFICATIONS SHEET 7.2

SIGN TYPE PW.
Pedestrian Wayfinding - Additional Examples and Mounting Options

Scale: 3/4" = 1'
Drawn by: MH
Checked by: DR
Date: 4/18/14
Project: Burlington Wayfinding

WALKING

WATERFRONT

FERRY

SHOPPING

DINING

CAMPUS DISTRICT

BIKE PARKING

AIRPORT

BUS

TRAIN STATION

BIKING

WALK BICYCLE

SKATE PARK

DOG PARK

CHURCH STREET

COMMUNITY BOATHOUSE

PARK

MUSEUM

MEMORIAL/MONUMENT

BOAT SLIP

LODGING

RESTROOMS

WATERFRONT PROMENADE

LIBRARY

STAIRS

ELEVATOR

ECHO LAKE AQUARIUM & SCIENCE CENTER

FISHING PIER

PARKING

INFORMATION

PAY

NO AUTOS

NO SKATEBOARDING

NO ROLLERBLADING

NO LOITERING

Note: Electronic versions of these symbols to be provided by LandWorks

Burlington Wayfinding Improvements

2014

City of Burlington
Department of Public Works
645 Pine St #A
Burlington, VT 05401
802.863.9094

VT Agency of Transportation
One National Life Drive
Montpelier, VT 05633

Federal Highway Administration
PO Box 568
Montpelier, VT 05601

Design Team

LandWorks
228 Maple St., Suite 32
Middlebury, VT 05753
802.388.3011

Resource Systems Group
55 Railroad Row
White River Jct., VT 05001
802.295.4999

Revisions

WAYFINDING SPECIFICATIONS SHEET 8

PICTOGRAMS
Graphic Symbols for Wayfinding & Parking Signs

Scale: 3/4" = 1'
Drawn by: MH
Checked by: DR
Date: 4/18/14
Project: Burlington Wayfinding

Notes:
1. See VTrans Standard E-163 and E-164 for further information on footing / foundation installation
2. DIG SAFE must be contracted prior to installation- clearances from all underground utilities required.
3. All locations confirmed in field with Owner or Owner's Representative prior to installation.
4. All signs shall be installed so as to be level and plumb.
5. Concrete foundations and footings shall be reinforced in accordance with industry practice and standards and/or with ASTM C94 standard or VTrans Concrete Class 'B'.

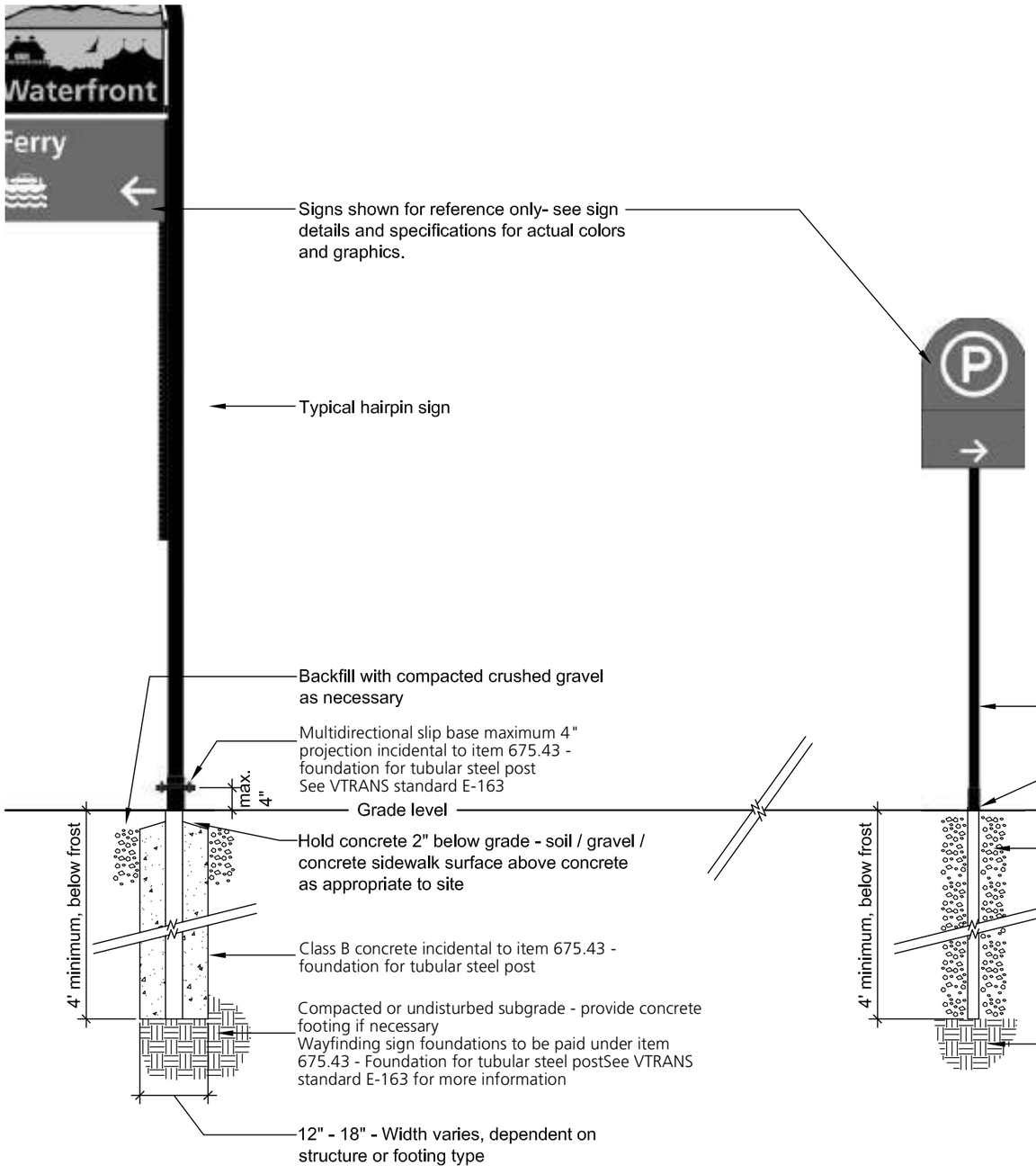

'Hairpin' or Pedestrian Wayfinding Sign Installation w/ Breakaway Assembly
Scale: 1/2"=1-'0"

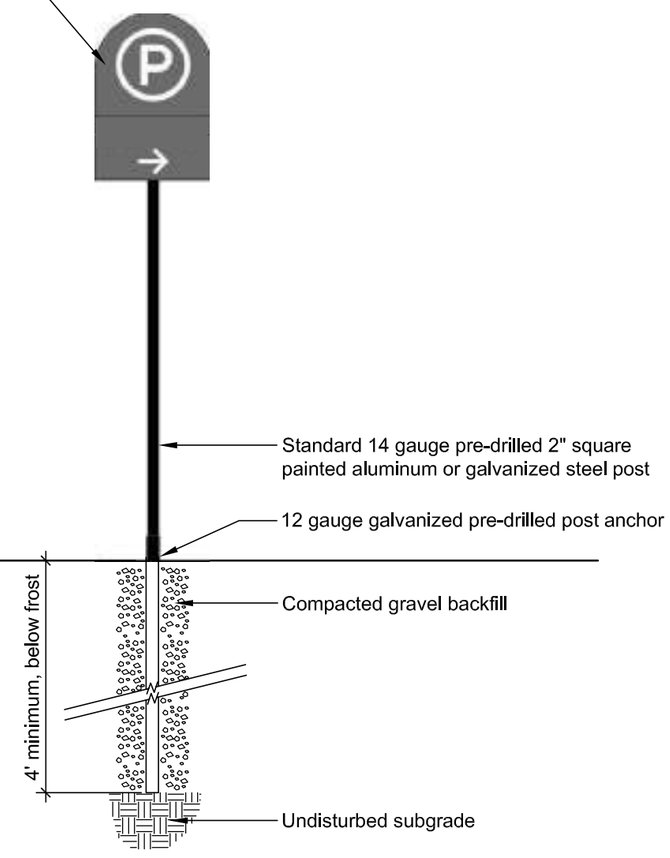

Type 'S' Sign Installation (direct burial)
Scale: 1/2"=1-'0"

Burlington Wayfinding Improvements

2014

City of Burlington
Department of Public Works
645 Pine St #A
Burlington, VT 05401
802.863.9094

VT Agency of Transportation
One National Life Drive
Montpelier, VT 05633

Federal Highway Administration
PO Box 568
Montpelier, VT 05601

Design Team

LandWorks
228 Maple St., Suite 32
Middlebury, VT 05753
802.388.3011

Resource Systems Group
55 Railroad Row
White River Jct., VT 05001
802.295.4999

Revisions

WAYFINDING SPECIFICATIONS SHEET 9.1

FOUNDATIONS & FOOTINGS
Sign Types H, PW & S

Scale: 3/4" = 1'
Drawn by: MH
Checked by: DR
Date: 4/18/14
Project: Burlington Wayfinding

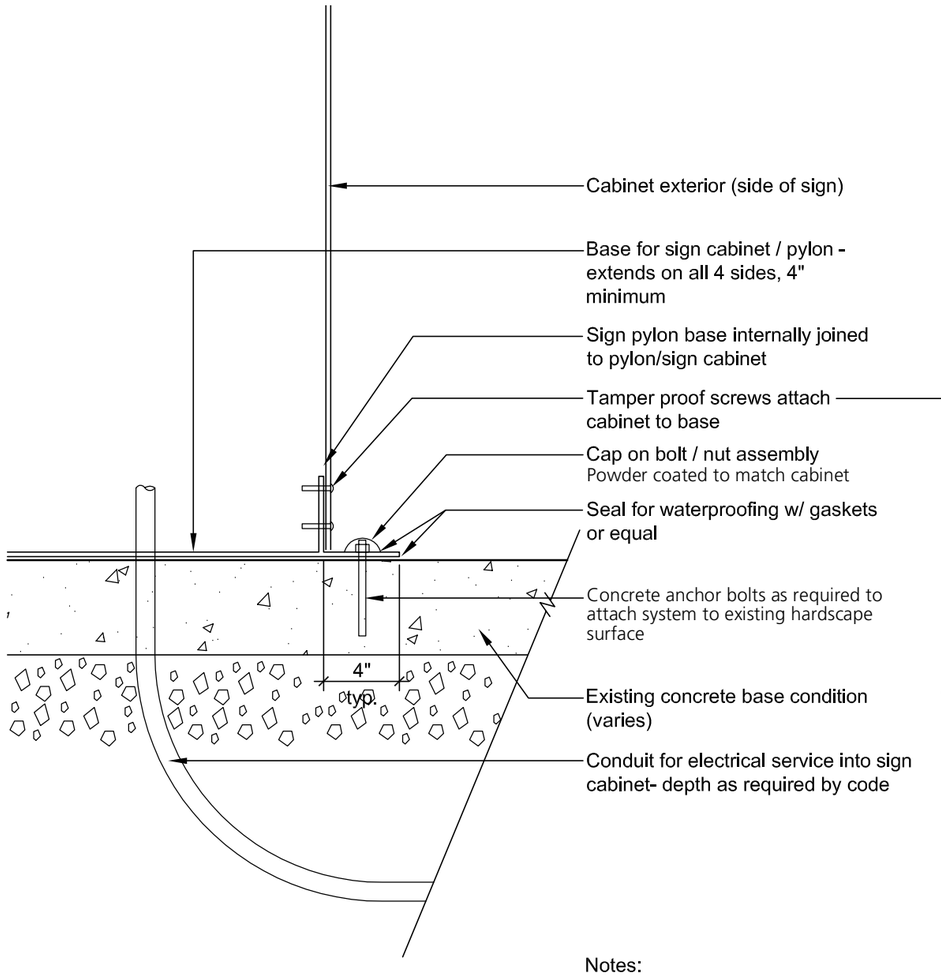

Notes:

1. Saw-cut existing concrete as necessary to run electrical conduit from the parking garage to the signs. Patch + repair concete as needed.
2. See adjacent detail (Sign Type Pf on New Concrete Footing) for additional mounting information

Parking Sign Type Pf - Section Through Foundation Detail
Front View (shown on existing concrete surface)
Scale 1 1/2" = 1'-0"

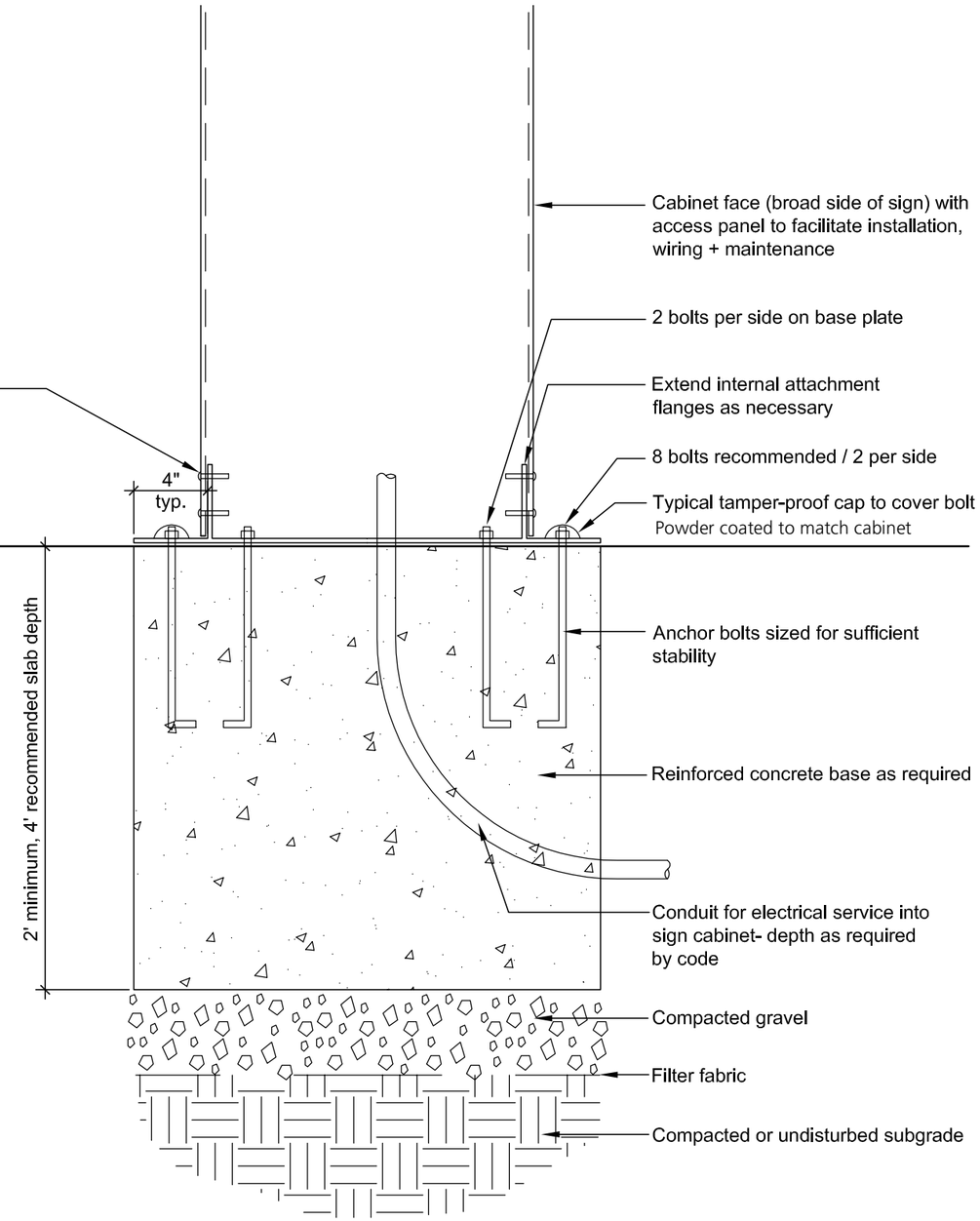

Parking Sign Type Pf - Section Through Foundation Detail
Side View (shown on new concrete footing)
Scale 1 1/2" = 1'-0"

Burlington Wayfinding Improvements

2014

City of Burlington
Department of Public Works
645 Pine St #A
Burlington, VT 05401
802.863.9094

VT Agency of Transportation
One National Life Drive
Montpelier, VT 05633

Federal Highway Administration
PO Box 568
Montpelier, VT 05601

Design Team

LandWorks
228 Maple St., Suite 32
Middlebury, VT 05753
802.388.3011

Resource Systems Group
55 Railroad Row
White River Jct., VT 05001
802.295.4999

Revisions

WAYFINDING SPECIFICATIONS SHEET 9.2

FOUNDATIONS & FOOTINGS
Sign Type Pf

Scale: 3/4" = 1'
Drawn by: MH
Checked by: DR
Date: 4/18/14
Project: Burlington Wayfinding

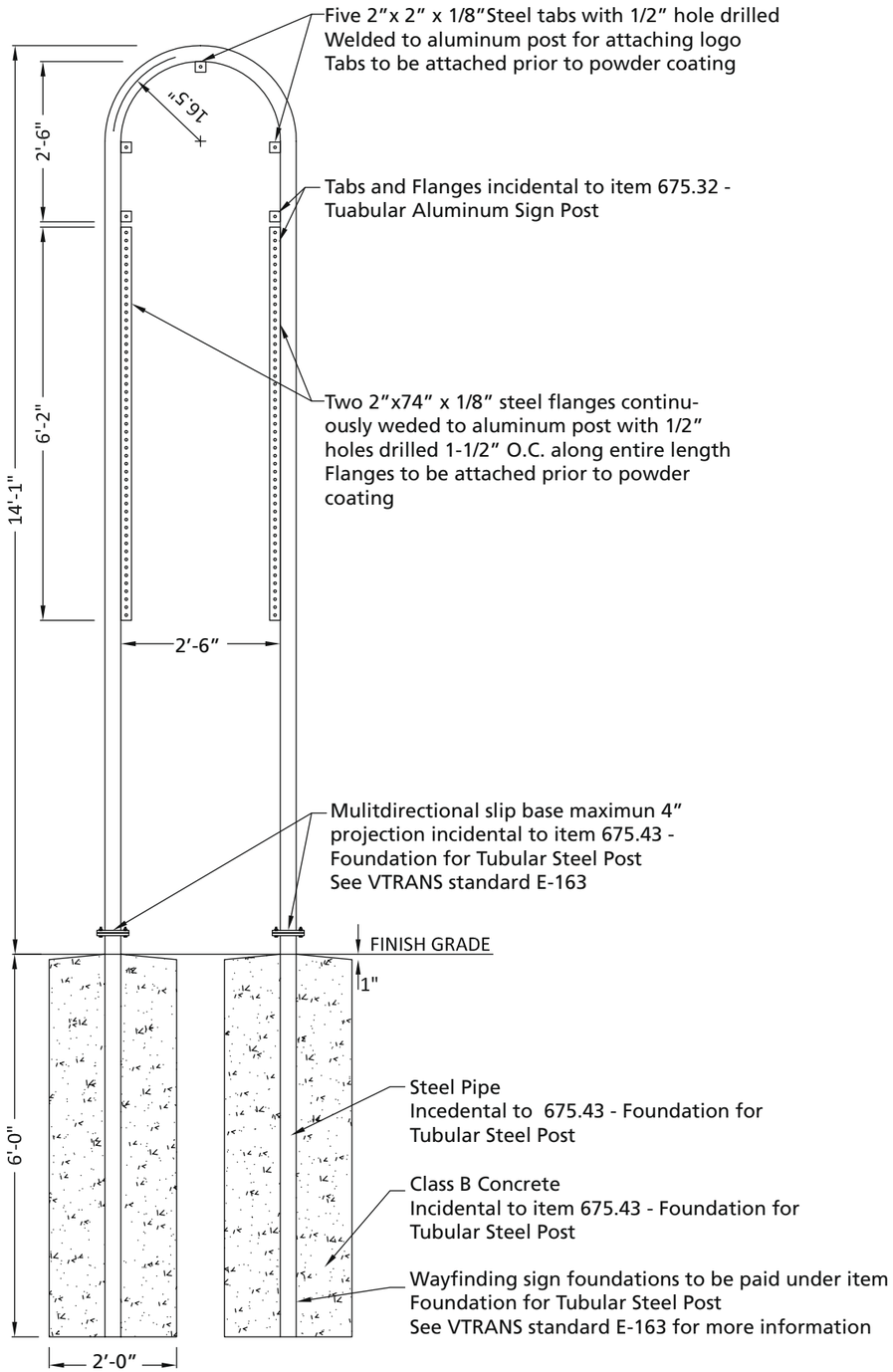

HAIRPIN SIGNS DETAIL

NOT TO SCALE

HAIRPIN SIGNS NOTES

1. All graphics to be supplied and approved prior to installation.
2. All wayfinding signs, including materials, fonts, types, sizes, spacing and colors shall be in accordance with *Getting Around Burlington: A Plan for City Signing, Wayfinding and Information. Publication December 2008 Update.*
3. *Color Specifications:*
   - *Sky: Pantone 272 CVC (RGB: 137, 119, 186)*
   - *Sun: Pantone 136 CVC (RGB: 252, 191, 73)*
   - *Mountains (blue): Pantone 319 CVC (RGB: 76, 206, 209)*
   - *Mountains (green): Pantone 340 CVC (RGB 0, 153, 119)*
   - *Lake: Pantone 244 CVC (RGB 237, 160, 211)*
   - *Skyline: Pantone Black (RGB: 0, 0, 0,)*
   - *Outlines: Pantone Black (RGB: 0, 0, 0,)*
   - *Type: Pantone 136 CVC (RGB 252, 191, 73)*

   Posts: Powder coated black

   Destination Panels:
   - *Background: Powder coated blue-green RAL 5021 (RGB: 26, 122, 99) both sides. Sides with lettering to be retroreflective equal*
   - *Text and symbols: Retroreflective white vinyl*

Burlington Wayfinding Improvements

2014

City of Burlington
Department of Public Works
645 Pine St #A
Burlington, VT 05401
802.863.9094

VT Agency of Transportation
One National Life Drive
Montpelier, VT 05633

Federal Highway Administration
PO Box 568
Montpelier, VT 05601

Design Team

LandWorks
228 Maple St., Suite 32
Middlebury, VT 05753
802.388.3011

Resource Systems Group
55 Railroad Row
White River Jct., VT 05001
802.295.4999

Revisions

WAYFINDING SPECIFICATIONS SHEET 9.3

FOUNDATIONS & FOOTINGS
Sign Type Hairpin

Scale: 3/4" = 1'
Drawn by: MH
Checked by: DR
Date: 4/18/14
Project: Burlington Wayfinding

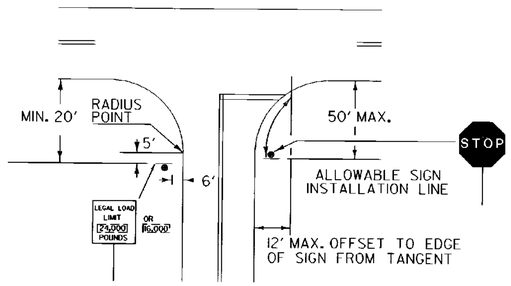

STOP SIGN SHALL BE PLACED ON DRIVERS RIGHT, MAINTAINING MAXIMUM VISIBLITY. CLEARANCE SHALL BE A MINIMUM OF 6' AND A MAXIMUM OF 50' FROM EDGE LINE OF INTERSECTING ROADWAY AND DOES NOT HAVE TO BE ADJACENT TO THE STOP BAR.

LEGAL LOAD LIMIT AND STOP SIGNS AT INTERSECTIONS WITH TOWN HIGHWAYS

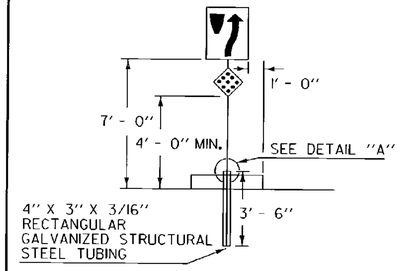

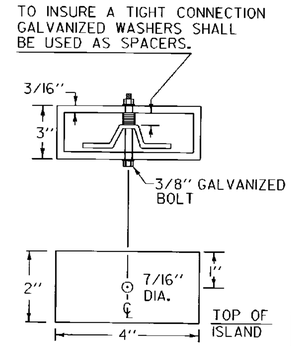

SLEEVE DETAIL "A"

SIGNS ON MEDIAN ISLANDS IN THE LINE OF TRAFFIC

INCREASE VERTICAL CLEARANCE TO 7' IN AREAS OF FREQUENT ROADSIDE PARKING OR PEDESTRIAN ACTIVITY

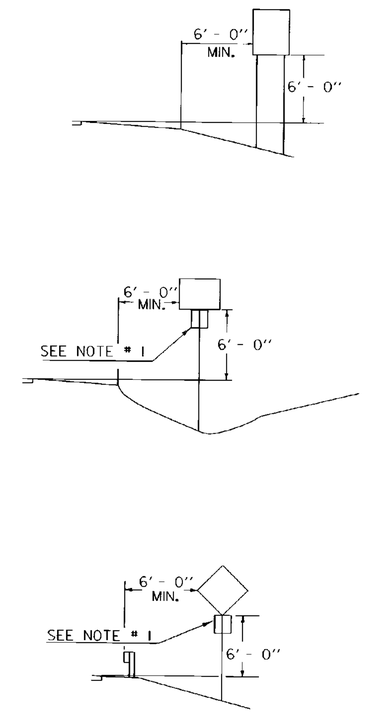

RURAL

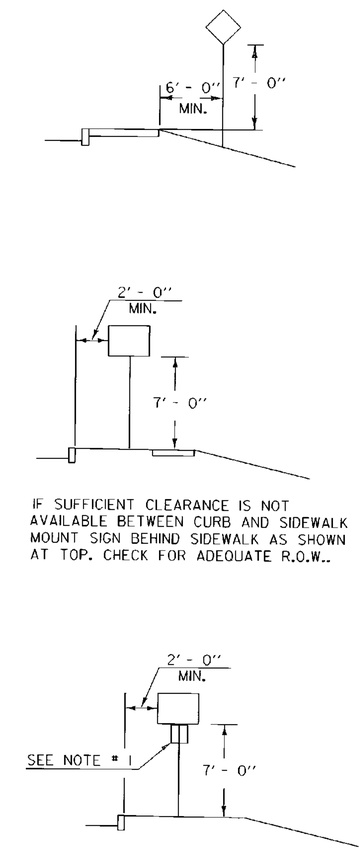

IF SUFFICIENT CLEARANCE IS NOT AVAILABLE BETWEEN CURB AND SIDEWALK MOUNT SIGN BEHIND SIDEWALK AS SHOWN AT TOP. CHECK FOR ADEQUATE R.O.W..

URBAN

NOTES:

1. IN BOTH RURAL AND URBAN LOCATIONS, IF A SECONDARY SIGN IS MOUNTED BELOW ANOTHER SIGN, THE MINIMUM CLEARANCE MAY BE REDUCED BY ONE FOOT.
2. IN RURAL AREAS WITH NO OR MINIMAL SHOULDER, THE LATERAL CLEARANCE TO THE EDGE OF A SIGN SHOULD BE A MINIMUM OF 12' FROM THE EDGE OF THE TRAVELED WAY.
3. ALSO SEE OTHER STANDARD SHEETS FOR MOUNTING CLEARANCE AND SPACING OF DESTINATION AND ROUTE MARKER ASSEMBLIES AND TOWN LINE SIGNS.

POST REFERENCE:

REFER TO THE DETAILS ON THE APPROPRIATE STANDARD DRAWING FOR INFORMATION CONCERNING THE PROPER MOUNTING OF SIGNS ON APPROPRIATE POSTS.

OTHER STDS. REQUIRED: E-160 E-161 E-162 E-163 E-164

REVISIONS AND CORRECTIONS

JAN. 23, 1995 - DATE OF ORIGINAL ISSUE

AUG. 08, 1995 - VARIOUS MINOR NOTE REVISIONS

APPROVED FOR THIS PROJECT AND/OR DESIGN IMPLEMENTATION. FHWA FINAL APPROVAL PENDING.

APPROVED

DIRECTOR OF ENGINEERING

TRAFFIC AND SAFETY ENGINEER

STANDARD SIGN PLACEMENT CONVENTIONAL ROAD

/traf/std/std121.dgn : std121.i

VERMONT AGENCY OF TRANSPORTATION

STANDARD

E-121

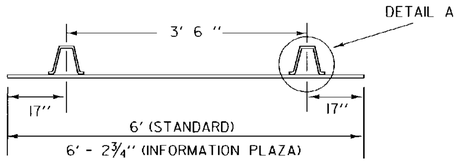

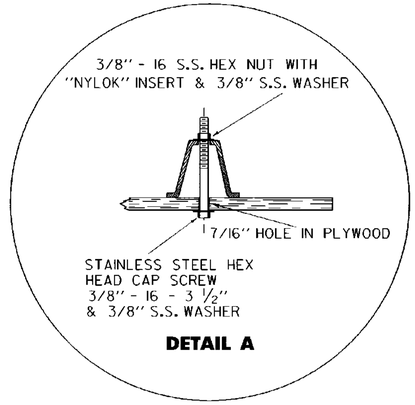

DETAIL A

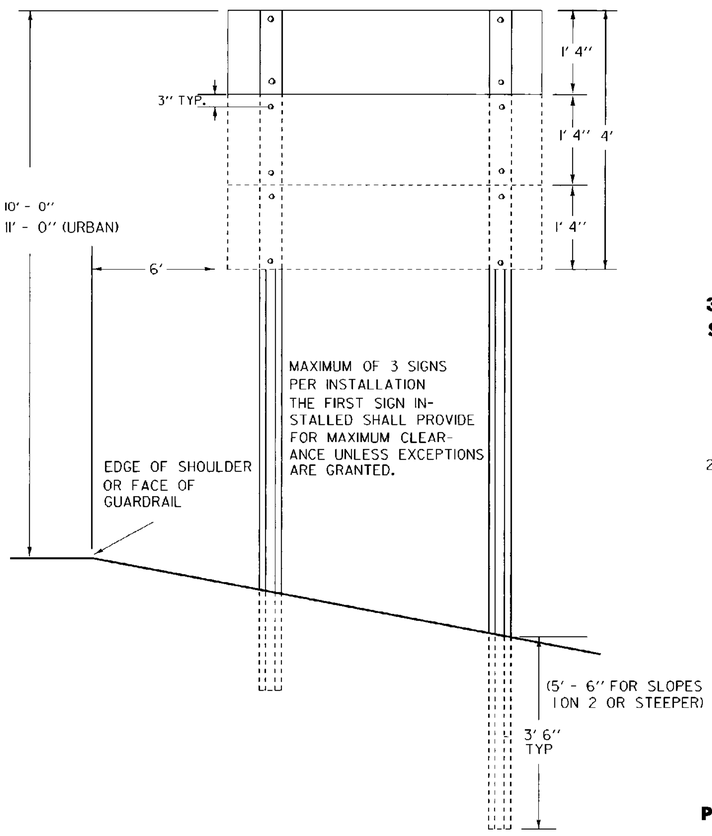

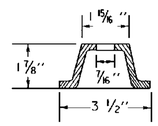

3#/LF FLANGED CHANNEL STEEL SIGN POST DETAIL

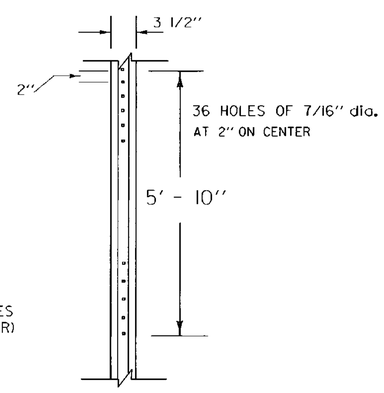

POST DRILLING DETAIL

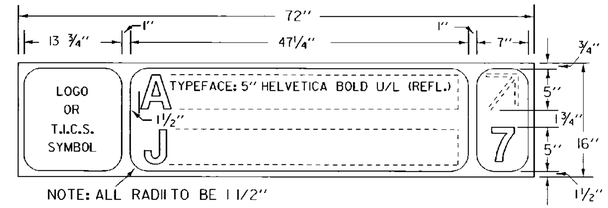

TYPE A

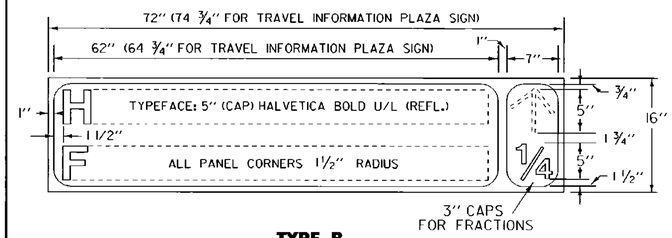

TYPE B

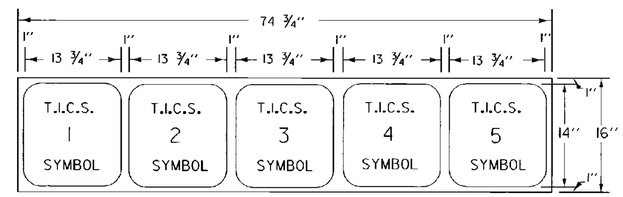

TYPE C

ONLY USED ON APPROACHES
TO INFORMATION PLAZAS

EXAMPLE OF PLAZA INFORMATION SIGN

FOR MORE DETAILS ON THE STATE'S INFORMATION SYSTEM, WRITE OR CALL: TRAVEL INFORMATION COUNCIL, C/O AGENCY OF TRANSPORTATION, MAINTENANCE DIVISION, NATIONAL LIFE BUILDING, MONTPELIER, VERMONT 05602 (802) 828-2651.

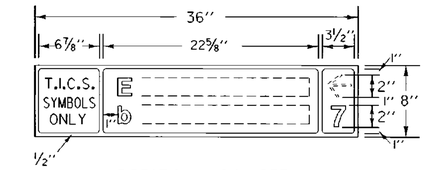

DIRECTIONAL SIGN DETAIL
FOR USE ON HIGHWAYS WITH SPEEDS
OF 30 M.P.H. OR LESS

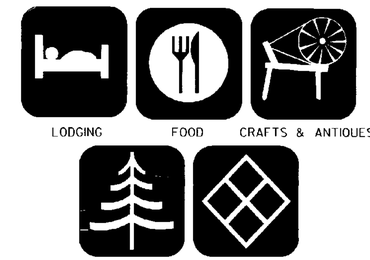

THE SYMBOLS ABOVE ARE FEATURED ON VERMONT'S TRAVEL INFORMATION PLAZAS, WHICH ARE FREE-STANDING OUTDOOR KIOSKS FOUND AT INTERSTATE REST AREAS, WELCOME CENTERS, AND NEAR KEY POINTS OF INTEREST. PLAZA LOCATIONS ARE INDICATED ON THE OFFICIAL STATE MAP BY THE SYMBOL ?.

MATERIALS:

SIGN BASE MATERIAL SHALL BE HIGH DENSITY OVERLAID PLYWOOD, ⅝" THICK, WHICH HAS BEEN SEALED ON THE EDGES AND PAINTED BLACK. THE BACK OF THE SIGNBOARD SHALL ALSO BE PAINTED BLACK. EACH SIGNBOARD IS TO BE DRILLED WITH FOUR 7/16" HOLES. THE INTERIOR OF THE HOLES SHALL BE PAINTED OR OTHERWISE SEALED AGAINST THE WEATHER.

DIRECTIONAL ARROWS AND MILEAGE NUMBERS WILL BE MADE OF REFLECTORIZED MATERIAL. (ENGINEERING GRADE)

COLOR:

SIGNBOARD FACES WILL HAVE BLACK BACKGROUND WITH WHITE BORDER. T.I.C.S. SYMBOL BACKGROUNDS WILL BE COLORED AS FOLLOWS:

LODGING - MAGENTA (PINK)
FOOD - ORANGE
CRAFTS & ANTIQUES - AQUA
RECREATION - BROWN
GOODS AND OTHER SERVICES - BLACK

ALL SYMBOLS WILL BE REFLECTORIZED.

TEXT LAYOUT:

NAME OF BUSINESS ENTERPRISE WILL BE IN UPPER AND LOWER CASE LETTERS STARTING FLUSH LEFT ON THE TOP LINE, AND MAY, ONLY WHEN NECESSARY, EXTEND TO THE SECOND LINE, (FLUSH LEFT ALSO). DIRECTIONAL INFORMATION WILL BE ALL IN LOWER CASE (NO CAPS), AND WILL ALWAYS BE ON THE SECOND LINE, EITHER FLUSH LEFT OR FOLLOWING THE END OF THE ESTABLISHMENT'S NAME.

OTHER STDS. REQUIRED: E-160

REVISIONS AND CORRECTIONS

AUG. 22, 1988 - DATE OF ORIGINAL ISSUE
AUG. 08, 1995 - MINOR DETAIL AND NOTE REVISIONS

APPROVED FOR THIS PROJECT AND/OR DESIGN IMPLEMENTATION. FHWA FINAL APPROVAL PENDING.

APPROVED

DIRECTOR OF ENGINEERING

TRAFFIC AND SAFETY ENGINEER

TRAVEL INFORMATION COUNCIL SIGNS

/traf/std/stdel25.dgn : stdel25.i

VERMONT AGENCY OF TRANSPORTATION

STANDARD
E-125

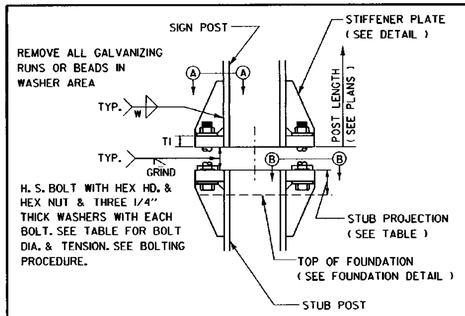

SLIP BASE DETAIL
(ELEVATION)

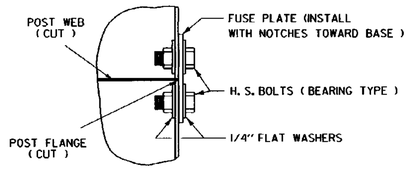

FUSE PLATE "HINGE" DETAIL

(SEE NOTE 7)

FLANGE HOLES FOR HINGE SHALL BE DRILLED

POST SIZE	BOLT SIZE	A	B	C	D	E	TI	T2	W	R
W6X9	5/8" Ø X 3 1/2" *	5"	2"	1 1/4"	2 3/4"	1 1/8"	3/4"	1/2"	1/4"	11/32"
W6X12										
W6X15										
W8X18										
W8X21										
W10X22	3/4" Ø X 4 1/2" **	6"	2 1/4"	1 3/8"	3 1/2"	1 1/4"	1"	3/4"	5/16"	11/32"
W10X26										
W12X30		7"			4"	1 1/2"				

POST SIZE	F	G	H	J	K	L	N		DI	T3	BOLT DIA.	BASE DIA.	BASE DEPTH	MIN. STUB LENGTH	STUB PROJ.	VOLUME OF SINGLE BASE
W6X9	3 5/8"	2"	1 1/8"	4"	2 1/4"	7/8"	1/2"		9/16"	1/4"	1/2"	24"	6'-0"	3'-0"	2 1/2"	0.70 C.Y.
W6X12																
W6X15	4 3/8"	2 1/2"	1 1/4"	6"	3 1/2"	1 1/4"	5/8"		11/16"	5/8"	5/8"					
W8X18	4 5/8"	2 1/2"	1 1/4"	5 1/4"	2 3/4"	1 1/4"	5/8"		11/16"	5/8"	5/8"					
W8X21	4 3/4"	2 1/2"	1 1/2"	5 1/4"	2 3/4"	1 1/4"	3/4"		13/16"	1/2"	3/4"					
W10X22	5 1/4"	3"	1 1/2"	5 3/4"	2 3/4"	1 1/2"	3/4"		13/16"	1/2"	3/4"					
W10X26																
W12X30	5 1/4"	3"	1 1/2"	6 1/2"	3 1/2"	1 1/2"	3/4"		13/16"	1/2"	3/4"	30"	6'-6"	3'-0"	2 1/2"	1.2 C.Y.

* 5/8" BOLTS SHALL HAVE A MINIMUM THREAD LENGTH OF 2 INCHES

** 3/4" BOLTS SHALL HAVE A MINIMUM THREAD LENGTH OF 2 1/4 INCHES THESE BOLTS SHALL BE FURNISHED WITH TWO NUTS FOR EACH BOLT.

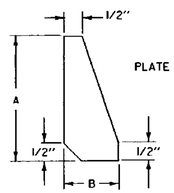

STIFFENER PLATE
(SEE TABLE FOR DIMENSIONS)

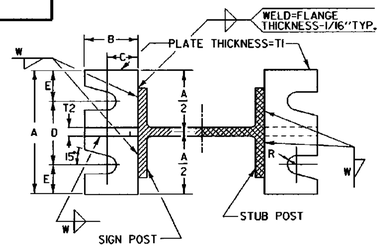

SECTION A-A **SECTION B-B**

(SEE TABLE FOR DIMENSIONS)

SECTIONS SHOWN ARE FOR INSTALLATIONS ON RIGHT SHOULDER AND IN GORE. PLATE SLOT BEVELS ARE OPPOSITE FOR INSTALLATIONS IN THE MEDIAN OF DIVIDED HIGHWAYS AND TWO WAY RAMPS.

SLIP BASE DETAIL
(SECTION)

1. MAKE SURE ALL BOLTS ARE FROM THE SAME STOCK.
2. TRY NUTS ON BOLT THREADS MAKING SURE THEY TURN EASILY.
3. PLACE (3) BOLTS IN ''SKIDMORE - WILHELM'' DEVICE. TORQUE TO PROPER TENSION IN DEVICE. CALIBRATE TORQUE WRENCH BY CHECKING ON THESE THREE BOLTS WHEN UNDER PROPER TENSION IN DEVICE.
4. USE THE AVERAGE OF THE THREE TORQUES ON SIMILAR BOLTS IN THE REAL SUPPORT.
5. ASSEMBLE POSTS TO STUB WITH BOLTS AND WITH THREE 1/4'' FLAT WASHERS. (ONE EACH: UNDER HEAD OF BOLT. BETWEEN PLATES. AND UNDER NUT.)
6. SHIM AS REQUIRED TO PLUMB POST.
7. TIGHTEN ALL BOLTS THE MAXIMUM POSSIBLE WITH A 12'' TO 15'' WRENCH TO BED WASHERS AND SHIMS AND TO CLEAN BOLT THREADS. THEN LOOSEN EACH BOLT IN TURN AND RETIGHTEN IN A SYSTEMATIC ORDER TO THE PRESCRIBED TENSION.
8. THE BASE PLATE BOLTS WILL BE TORQUED TO PRESCRIBED BOLT TENSION SHOWN BELOW. AFTER THE INITIAL TORQUING USE A SECOND NUT TO INSURE THAT THE FIRST NUT WILL NOT BACK OFF. THE CONTRACTOR WITH THE AGENCY INSPECTOR WILL RETURN TO THE SIGN TWO MORE TIMES AT INTERVALS OF 30 DAYS FOR THE PURPOSE OF CHECKING AND RE-ESTABLISHING THE PRESCRIBED TORQUE. THE SECOND NUT SHALL REMAIN AS A LOCK NUT.
9. THE ''SKIDMORE - WILHELM'' DEVICE IS AVAILABLE THROUGH THE V.A.O.T. CONSTRUCTION DIVISION.

PROCEDURE FOR ASSEMBLY OF BASE CONNECTION

GENERAL NOTES

1. DESIGN CONFORMS WITH AASHTO STANDARD SPECIFICATIONS FOR STRUCTURAL SUPPORTS FOR HIGHWAY SIGNS. LUMINAIRES. AND TRAFFIC SIGNALS.
2. MATERIAL AND FABRICATION SHALL CONFORM TO THE REQUIREMENTS OF THE STATE OF VERMONT AGENCY OF TRANSPORTATION STANDARD SHEETS AND SPECIFICATIONS.
3. THE POST CUT SHALL BE A SAW CUT ONLY. ALL OTHER CUTS EXCLUDING POST CUTS MAY BE FLAME CUT PROVIDED ALL EDGES ARE GROUND SMOOTH. METAL PROJECTING BEYOND THE PLATE FACE WILL NOT BE PERMITTED. ALL POST HOLES SHALL BE DRILLED.
4. ALL SAW CUTS SHALL BE PAINTED WITH AN APPROVED COATING.
5. EXTREME CARE SHOULD BE TAKEN TO KEEP THE SLIP JOINT FREE OF ANY FOREIGN MATERIAL, EITHER BY WRAPPING THE JOINT OR THOROUGH CLEANING IMMEDIATELY AFTER POURING OF CONCRETE.
6. ALL FUSE PLATE BOLTS SHALL BE TIGHTENED BY THE FABRICATOR TO THE PRESCRIBED BOLT TENSION. THE CONTRACTOR WILL BE HELD RESPONSIBLE TO CHECK AND CERTIFY THAT THE REQUIRED RESIDUAL TENSIONS ARE OBTAINED.
7. THE TOTAL WEIGHT OF TWO (2) POSTS WITH 3' - 2'' SPACING OR A SINGLE POST OF A TWO (2) POSTS INSTALLATION WITH 7' - 0'' SPACING SHALL NOT EXCEED 600 POUNDS BELOW THE FUSE PLATE.
8. THE AMOUNT OF TORQUE NECESSARY TO ACHIEVE THE PROPER BOLT TENSION FOR BOTH THE ''FUSE PLATE'' AND THE ''SLIP BASE'' SHALL BE DETEMINED BY USE OF A SUITABLE TORQUE WRENCH CALIBRATED IN A ''SKIDMORE-WELHELM'' DEVICE. THE PROCEDURE FOR CALIBRATING THE WRENCH IS OUTLINED IN THE ''PROCEDURE FOR ASSEMBLY OF BASE CONNECTION'' ON THIS SHEET.
9. DUE TO THE VARIABILITY OF THE GALVANIZATION ON THE BOLTS, NUTS, AND WASHERS, ETC., NO FORMULA OR TABLES SHALL BE USED TO CALCULATE THE REQUIRED CONVERSION FROM BOLT TENSION TO APPLIED TORQUE. UNLESS APPROVED BY TRAFFIC AND SAFETY DIVISION.
10. THE INSPECTION OF THE ''FUSE PLATE BOLTS'' SHALL BE AS OUTLINED IN THE MOST RECENT EDITION OF AASTHO ''STANDARD SPECIFICATIONS FOR HIGHWAY BRIDGES''. SECTION 11.5.6 ''CONNECTIONS USING HIGH STRENGTH BOLTS ''.
11. INSPECTION OF THE ''SLIP BASE BOLTS'' SHALL BE AS FOLLOWS: USING A TORQUE WRENCH WHICH HAS BEEN CALIBRATED IN THE ''SKIDMORE-WILHELM'' DEVICE WITH THREE BOLTS OF THE SAME GRADE, SIZE AND CONDITION AS THOSE UNDER INSPECTION. THE INSPECTOR SHALL SET THE WRENCH FOR MAXIMUM SETTING SHOWN BELOW FOR ''SLIP BASE BOLTS'' AND TEST ALL ''SLIP BASE BOLTS'' IN EACH ASSEMBLY.
    A) IF THE BOLT BEING TESTED TURNS MORE THAN 5 UPON APPLICATION OF THE WRENCH SET TO THE MAXIMUM. THE INSPECTOR SHALL SET THE WRENCH TO THE MINIMUM AND RETEST THE BOLT. IF THE BOLT TURNS LESS THAN 5 UPON APPLICATION OF THE WRENCH SET TO MINIMUM. IT SHALL BE CONSIDERED ACCEPTABLE. IF THE BOLT TURNS MORE THAN 5 UPON APPLICATION OF THE WRENCH SET TO MINIMUM, IT SHALL BE TIGHTENED AT LEAST TO THE MINIMUM.
    B) IF THE BOLT BEING TESTED TURNS LESS THAN 5 UPON APPLICATION OF THE WRENCH SET TO MAXIMUM. IT SHALL BE LOOSENED AND RETIGHTENED SO THAT IT FALLS WITHIN THE RANGE SPECIFIED AND REINSPECTED AS OUTLINED ABOVE.
12. SLIP BASE BOLT TENSIONS

BOLT SIZE	MIN. BOLT TENSION	MAX. BOLT TENSION
5/8 '' DIA.	1740 LBS.	2660 LBS.
3/4 '' DIA.	2400 LBS.	3660 LBS.

13. ALL DIMENSIONS REFERRING TO STUB HEIGHT IN THE VARIOUS TABLES AND FOUNDATION DETAILS SHALL BE ADJUSTED AS REQUIRED TO RESULT IN A TOTAL STUB HEIGHT WHICH IS NOT MORE THAN FOUR INCHES ABOVE A 60-INCH CHORD ALIGNED RADIALLY TO THE CENTERLINE OF THE HIGHWAY AND CONNECTING ANY POINT. WITHIN THE LENGTH OF THE CHORD, ON THE GROUND SURFACE ON ONE SIDE OF THE SUPPORT TO A POINT ON THE GROUND SURFACE ON THE OTHER SIDE.

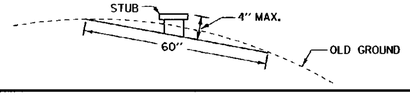

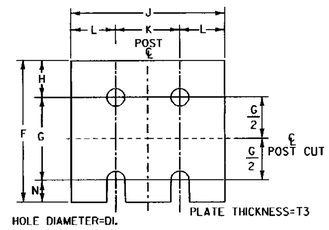

USE H.S. BOLTS WITH HEX. AND HEX. NUTS. ONE 1/4 '' THICK FLAT WASHERS UNDER EACH BOLT HEAD, AND ONE (1) 1/4 '' THICK FLAT WASHER UNDER THE NUT.

FUSE PLATE
(SEE TABLE FOR DIMENSIONS)

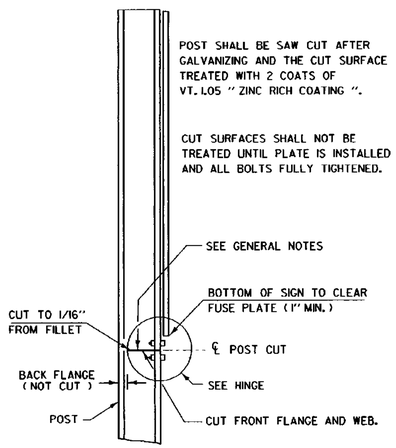

FUSE PLATE-POST DETAIL

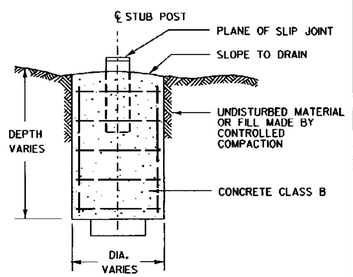

FLAT GROUND FOUNDATION DETAILS

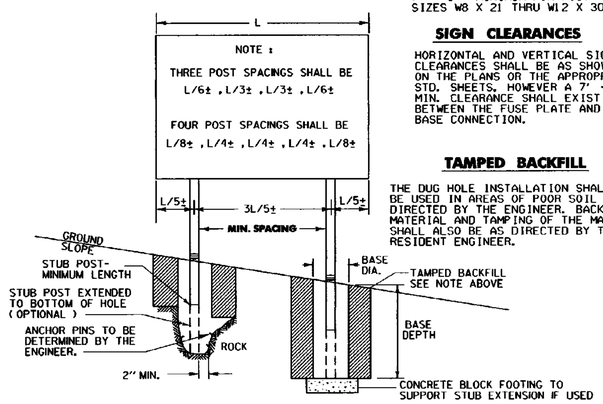

POST SPACING

3' - 2'' MINIMUM FOR POST SIZES W6 X 9 THRU W8 X 18
7' - 0'' MINIMUM FOR POST SIZES W8 X 21 THRU W12 X 30.

SIGN CLEARANCES

HORIZONTAL AND VERTICAL SIGN CLEARANCES SHALL BE AS SHOWN ON THE PLANS OR THE APPROPRIATE STD. SHEETS. HOWEVER A 7' - 0'' MIN. CLEARANCE SHALL EXIST BETWEEN THE FUSE PLATE AND BASE CONNECTION.

TAMPED BACKFILL

THE DUG HOLE INSTALLATION SHALL BE USED IN AREAS OF POOR SOIL AS DIRECTED BY THE ENGINEER. BACKFILL MATERIAL AND TAMPING OF THE MATERIAL SHALL ALSO BE AS DIRECTED BY THE RESIDENT ENGINEER.

CONSTRUCTION METHOD

HOLES FOR POST FOOTINGS MAY BE AUGERED OR DUG. THE HOLES MAY BE LEFT WITH EARTH SIDES. IF THE MATERIAL IS FIRM, AND ALL DISTURBED SOIL AROUND THE CURCUMFRENCE OF THE AUGERED HOLE IS REMOVED. IF NOT, A SUITABLE FORM APPROVED BY THE ENGINEER SHALL BE USED. CORRUGATED METAL CULVERT PIPE OR PAPER FORMS MANUFACTURED FOR USE AS CONCRETE COLUMN FORMS WILL BE ACCEPTABLE. IF THE STUB IS EXTENDED TO THE BOTTOM OF THE HOLE. A CONCRETE BLOCK FOOTING SHALL BE UTILIZED TO SUPPORT THE POST AND THE POST SHALL BE HELD SECURELY IN PLACE AT THE BOTTOM. THIS MAY BE DONE BY EMBEDDING THE POST AND CONCRETE BLOCK FOOTING IN WET CONCRETE AND ALLOWING TO SET WITH THE POST SECURED IN POSITION. PLUMBED AND PROPERLY BRACED. THE REMAINING FOOTING MAY BE POURED. THE TIME BETWEEN POURS FOR THE CURING OF THE CONCRETE SHALL BE AS DETERMINED BY THE ENGINEER. NO PART OF THE FORM SHALL SHOW ABOVE THE GROUND LINE WHEN THE WORK IS COMPLETED.

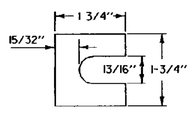

FURNISH TWO .012"± THICK AND TWO .032" ± THICK SHIMS PER POST. SHIMS SHALL BE FABRICATED FROM BRASS SHIM STOCK OR STRIP CONFORMING TO A.S.T.M. B-36.

SHIM DETAIL

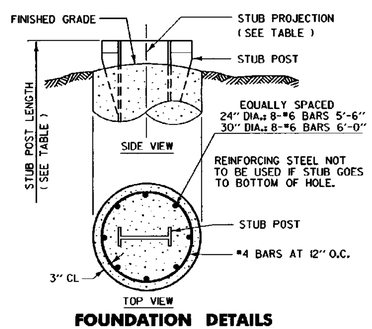

FOUNDATION DETAILS

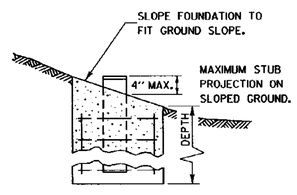

SLOPING GROUND FOUNDATION DETAILS

OTHER STDS. REQUIRED:

REVISIONS AND CORRECTIONS

SEPT. 10, 1987 - DATE OF ORIGINAL ISSUE
MAR. 21, 1988 - FHWA COMMENTS
JUNE 21, 1989 - FHWA - CHANGE TO 7' FUSE PLATE CLEARANCE
OCT. 21, 1992 - REVISED NOTES AND POST SPACING REQUIREMENTS
AUG. 18, 1995 - REVISED GENERAL NOTE 4

APPROVED FOR THIS PROJECT AND/OR DESIGN IMPLEMENTATION. FHWA FINAL APPROVAL PENDING.

APPROVED

DIRECTOR OF ENGINEERING

TRAFFIC AND SAFETY ENGINEER

W-SHAPED STEEL SIGN POST

/traf/std/stdel61.dgn : stdex161.i

VERMONT AGENCY OF TRANSPORTATION

STANDARD E-161

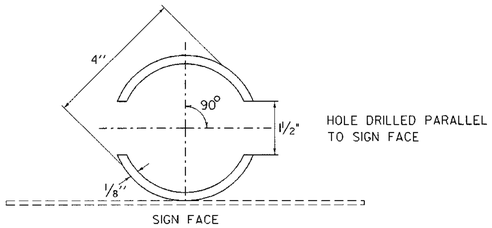

SECTION A-A

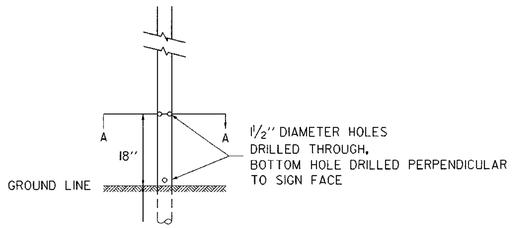

DETAIL A

4" DIAMETER POST
(MODIFIED)

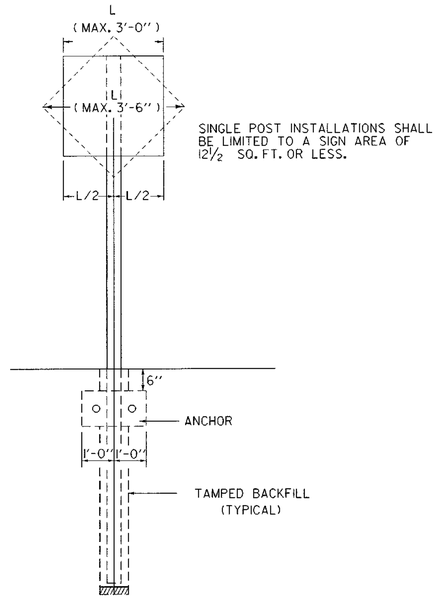

SINGLE POST INSTALLATIONS SHALL BE LIMITED TO A SIGN AREA OF 12½ SQ. FT. OR LESS.

* WHEN CONSTRUCTING MULTIPLE POST INSTALLATIONS, THE POST SPACING SHALL BE A MINIMUM OF 7' - 4" CENTER TO CENTER OF THE POSTS UNLESS USED BEHIND GUARD-RAIL A DISTANCE ≥ THE DEFLECTION DISTANCE (SEE STD. E-160).

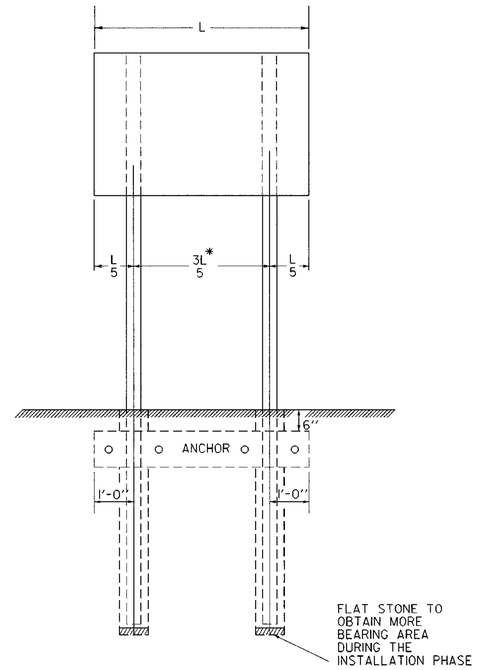

IN AREAS WHERE LEDGE ROCK IS ENCOUNTERED POSTS WILL BE SET AND GROUTED WITH TYPE 4 MORTAR, 24" BELOW THE TOP SURFACE OF THE SOLID ROCK UNLESS THE POSTS PENETRATE THE GROUND A MIN. 4'.

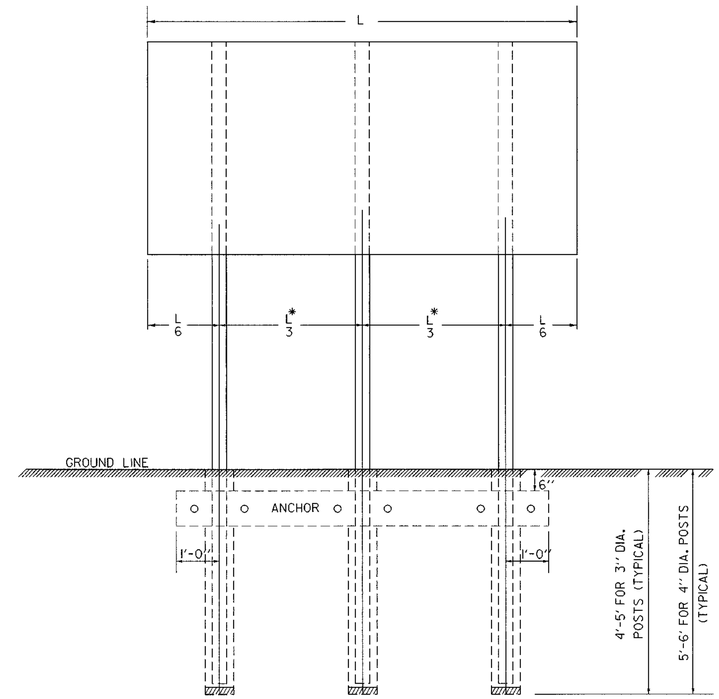

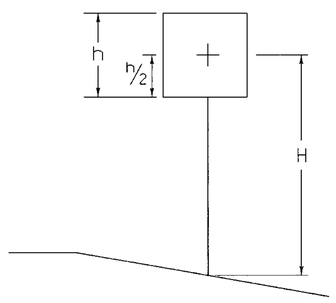

POST SELECTION CHART		
SIGN AREA (FT.^{2}) x H(FT.) ≤ SV (SELECTION VALUE)		
POST SIZE	Sv (FT.^{3})	DESIGN CRITERIA
3" DIA.	156	WIND VELOCITY = 60 MPH (10 YEAR MEAN RECURRENCE INTERVAL) WIND PRESSURE = 14 PSF ALUMINUM Fy = 24,000 PSI ALLOWABLE STRESS = 1.4 (24,000) PSI
4" DIA. *	286	
4" DIA. (MOD) *	282	

* TWO POST INSTALLATIONS - USE ONLY BEHIND GUARDRAIL AT A DISTANCE ≥ THE GUARDRAIL DEFLECTION DISTANCE. (SEE STD. E-160)

POST WEIGHTS		
POST DIAMETER	WALL THICKNESS	WEIGHT PER FT.
3" ROUND	⅛"	1.3 LBS
4" ROUND	⅛"	1.7 LBS
4" ROUND (MOD.)	⅛"	1.7 LBS

NOTES

ANCHORS USE TWO (2) PIECES OF 2" x 12" ROUGH PLANK. PLANKS, UNLESS OTHERWISE NOTED, SHALL CONFORM TO " STANDARD SPECIFICATIONS FOR CONSTRUCTION " SECTION 728.02

ERECTION LOCKNUTS ON ⅜" # 16 ALUMINUM POST BOLT CLIPS SHALL BE TORQUED TO 225 INCH POUNDS USING DRY, CLEAN, UNLUBRICATED THREADS. WHERE ALUMINUM SURFACES ARE TO BE PLACED IN CONTACT WITH WOOD, THEY SHALL BE GIVEN A THICK COAT OF AN ALKALI-RESISTANT BITUMINOUS PAINT MEETING THE REQUIREMENTS OF MILITARY SPECIFICATION MIL-P-6883, WHICH SHALL BE DRY BEFORE INSTALLATION.

THE HOLE SHALL BE CAREFULLY DUG AND THE POST SET TO THE DEPTH SPECIFIED ABOVE. POST SHALL NOT BE DRIVEN. THE BACKFILL MATERIAL SHALL CONFORM TO THE REQUIREMENTS OF APPROVED GRAVEL OR SHALL BE A MATERIAL APPROVED BY THE ENGINEER. COMPACTION OF THE BACKFILL WILL BE PERFORMED AS DIRECTED BY THE ENGINEER.

OTHER STDS. REQUIRED: E-160

REVISIONS AND CORRECTIONS

SEPT. 10, 1987 - DATE OF ORIGINAL ISSUE
MAR. 11, 1988 - FHWA REVIEW COMMENTS
AUG. 18, 1995 - REVISED POST WALL THICKNESS AND APPROPRIATE VALUES. ADDED 4" DIAMETER (MOD.) POST.
MAR. 11, 1996 - REVISED POST SELECTION CHART
MAY 20, 1999 - ORIGINAL LOST NEEDED NEW SIGNATURE

APPROVED

DIRECTOR OF PROJECT DEVELOPMENT

TUBULAR ALUMINUM SIGN POST

/traf/std/stdel62.dgn : stdel62.1

VERMONT AGENCY OF TRANSPORTATION

STANDARD E-162

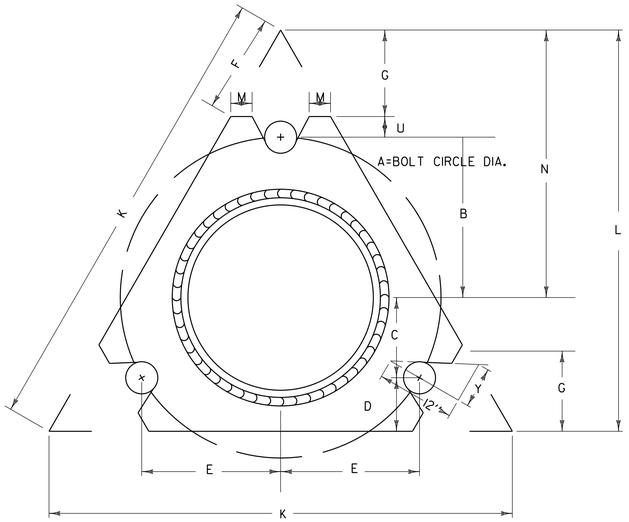

DETAILS OF MULTI-DIRECTIONAL SLIP BASE

TABLE A

DIMENSIONS NOMINAL PIPE SIZES	BOLT SIZE & TORQUE	WELD SIZE	t	Y	A	B	C	D	E	F	G	K	L	M	U	N
3'' DIA. 3½'' DIA.	⅝''Ø×3¼'' T=450''LBS.	⅜''	⅝''	7''	7''	3½''	1¾''	1¼''	3''	2 5/16''	2''	10⅜''	9''	½''	½''	6''
4'' DIA. 5'' DIA.	¾''Ø×3¾'' T=750''LBS.	7/16''	⅞''	8 9/16''	9''	4½''	2¼''	1½''	3⅞''	2⅞''	2½''	13''	11¼''	⅝''	½''	7½''

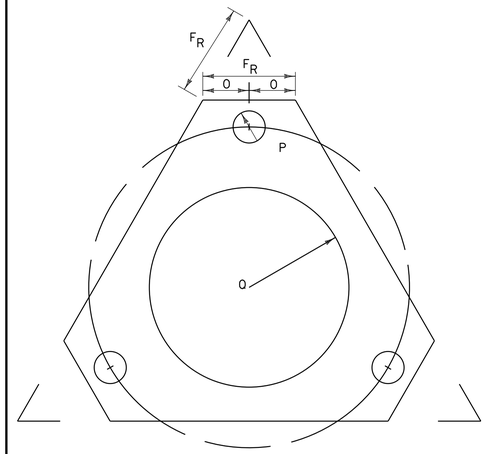

BOLT RETAINER PLATE

25 GAUGE (0.0247'') OR THINNER GALVANIZED STEEL

BOLT RETAINER PLATE SIMILAR IN DETAIL TO THE BASE PLATES WITH THE FOLLOWING EXCEPTIONS

DIMENSIONS NOMINAL PIPE SIZES	F_R	O	P	Q
3'' DIA. 3½'' DIA.	2⅛''	1 1/16''	11/16 ''	2½''
4'' DIA. 5'' DIA.	2⅝''	1 5/16''	13/16 ''	2⅞''

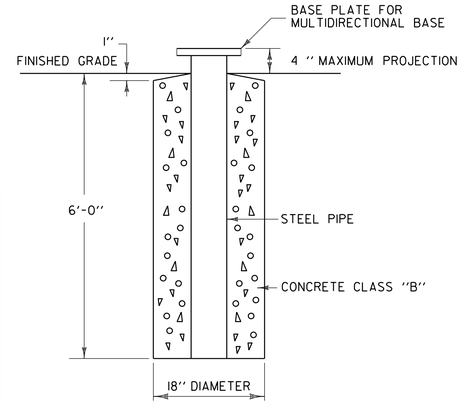

FOUNDATION DETAIL

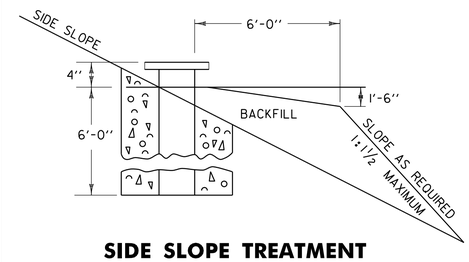

SIDE SLOPE TREATMENT

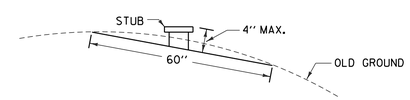

SEE GENERAL NOTE # 3.

GENERAL NOTES

1. THE MATERIAL FOR THE MULTI-DIRECTIONAL SLIP BASE ASSEMBLY SHALL CONFORM TO AASHTO M-270, GRADE 36 STEEL, AND BE GALVANIZED AS PER ASTM A-153.

2. THE BOLTS, NUTS AND CIRCULAR WASHERS SHALL CONFROM TO ASTM SECTION 15 A-325, "HIGH STRENCTH CARBON STEEL BOLTS FOR STRUCTURAL STEEL JOINTS". ALL BOLTS, NUTS, AND WASHERS SHALL BE GALVANIZED AS PER ASTM A-123

3. ALL DIMENSIONS REFERRING TO STUB HEIGHT IN THE VARIOUS TABLES AND FOUNDATION DETAILS SHALL BE ADJUSTED AS REQUIRED TO RESULT IN A TOTAL STUB HEIGHT WHICH IS NOT MORE THAN FOUR INCHES ABOVE A 60- INCH CHORD ALIGNED RADIALLY TO THE CENTERLINE OF THE HIGHWAY AND CONNECTING ANY POINT, WITHIN THE LENGTH OF THE CHORD, ON THE GROUND SURFACE ON ONE SIDE OF THE SUPPORT TO A POINT ON THE GROUND SURFACE ON THE OTHER SIDE.

BOLTING PROCEDURE

1. SHIM AS REQUIRED TO PLUMB POST.

2. TIGHTEN ALL BOLTS THE MAXIMUM POSSIBLE WITH 13 TO 16" WRENCH TO BED WASHERS AND SHIMS AND TO CLEAN BOLT THREADS. THEN LOOSEN EACH BOLT IN TURN AND RETIGHTEN BOLTS IN A SYSTEMATIC ORDER TO THE PRESCRIBED TORQUE. DO NOT OVERTIGHTEN.

3. BURR THREADS AT JUNCTION WITH NUT USING A CENTER PUNCH TO PREVENT NUT LOOSENING.

CONSTRUCTION METHOD

HOLES FOR POST FOOTINGS MAY BE AUGERED OR DUG. IF THE MATERIAL IS FIRM AND IF ALL DISTURBED SOIL AROUND THE CIRCUMFERENCE OF THE THE AUGERED HOLE IS REMOVED, THE HOLES MAY BE LEFT WITH EARTH SIDES. IF NOT, A SUITABLE FORM APPROVED BY THE ENGINEER SHALL BE USED. CORRUGATED METAL CULVERT PIPE OR PAPER FORMS, MANUFACTURED FOR USE AS CONCRETE COLUMN FORMS, WILL BE ACCEPTABLE. THE STUB SHALL BE EXTENDED TO THE BOTTOM OF THE HOLE AND SET ON THE CONCRETE PAD FOOTING TO SUPPORT THE POST SO THE POST SHALL BE HELD SECURELY IN PLACE AT THE BOTTOM. THIS MAY BE DONE BY EMBEDDING THE POST AND CONCRETE BLOCK FOOTING IN WET CONCRETE, AND ALLOWING TO SET WITH THE POST SECURED IN POSITION; PLUMBED AND PROPERLY BRACED. THE REMAINDER OF THE FOOTING MAY THEN BE POURED. THE TIME BETWEEN POURS FOR THE CURING OF THE CONCRETE SHALL BE AS DETERMINED BY THE ENGINEER. THE FORM SHALL BE LEFT IN PLACE AND THE HOLE BACKFILLED AND COMPACTED AS DIRECTED BY THE ENGINEER. NO PART OF THE FORM SHALL SHOW ABOVE THE GROUND LINE WHEN THE WORK IS COMPLETED.

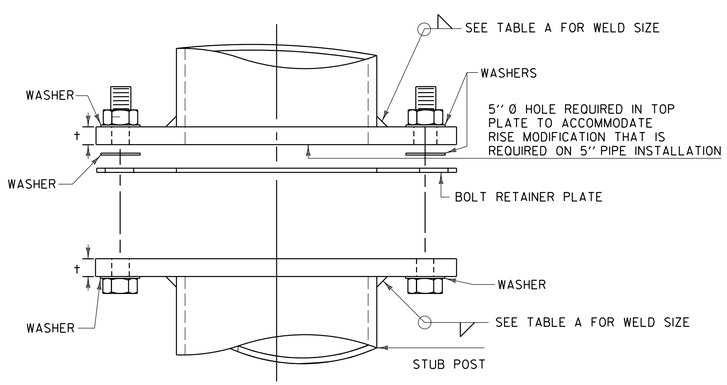

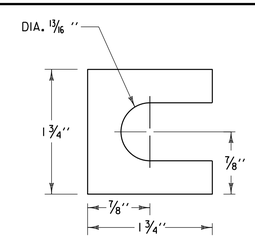

SHIM DETAIL

FURNISH 2-0.012" THICK AND 2-0.032" THICK SHIMS PER POST. SHIMS SHALL BE FABRICATED FROM BRASS SHIM STOCK OR STRIP CONFORMING TO ASTM 836

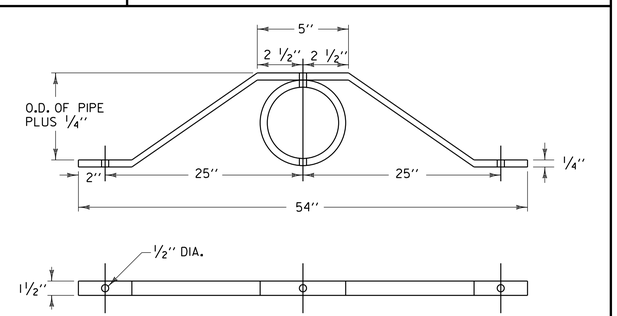

SIGN SUPPORT BRACE

(REQUIRED WHEN INSTALLING 3 ASSEMBLY FRAME)

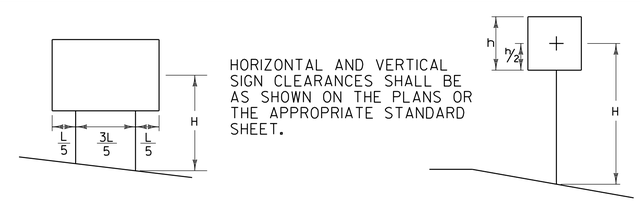

POST SELECTION CHART DETAIL

POST SELECTION CHART

SIGN AREA (FT ^{2}) x H (FT) ≤SV (SELECTION VALUE)

POST DIA.INCHS	WEIGHT LB/FT	Sv	DESIGN CRITERIA
3	7.6	318	WIND SPEED = 60 MPH (10-YEAR MEAN RECURRENCE INTERVAL) WIND PRESSURE = 15 PSF STEEL MIN YIELD Fy = 36,000 PSI ALLOWABLE STRESS = (1.4) 0.66 Fy
3 ½	9.0	442	
4	10.8	593	
5	14.6	1007	

REV.	DATE	DESCRIPTION
0	SEPT. 26, 1987	ORIGINAL APPROVAL
1	AUG. 18, 1995	REVISED TITLE BLOCK
2	MAR. 11, 1996	REVISED POST SELECTION CHART
4	MAR. 10, 2017	REVISED SLIP BASE DETAIL, ADDED SHIM DETAIL, ADDED BOLTING PROCEDURE

OTHER STANDARDS REQUIRED:

VTRANS AND FHWA APPROVAL ON FILE WITH CONTRACT ADMINISTRATION

TUBULAR STEEL SIGN POST

VTrans Working to Get You There VERMONT AGENCY OF TRANSPORTATION

STANDARD

E-163

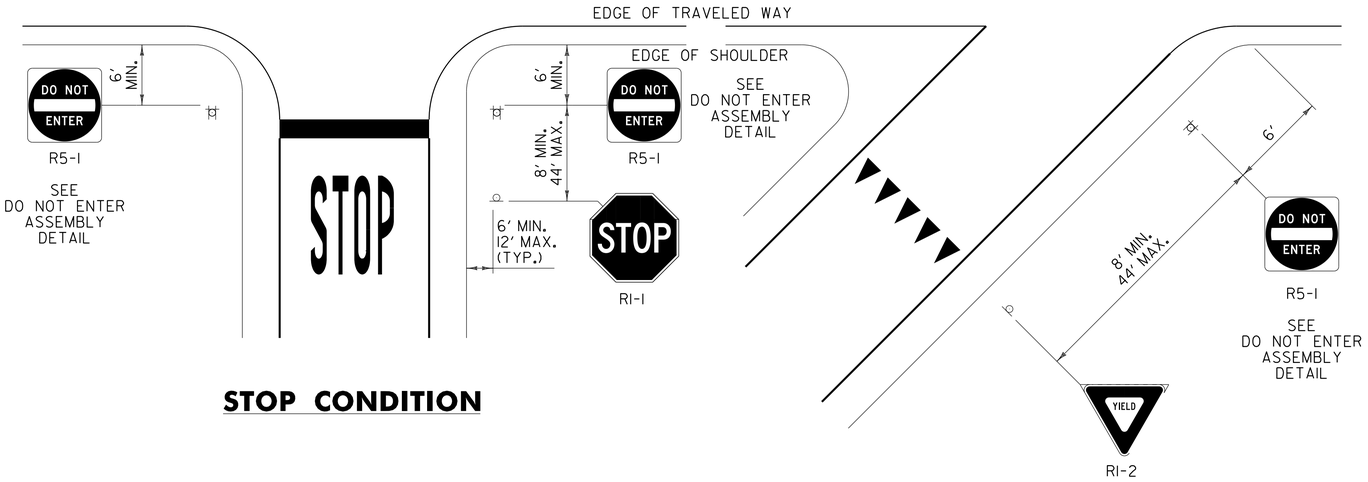

STOP CONDITION

EXIT RAMP SIGN LOCATION DETAILS

YIELD CONDITION

NOTES:

1. THE "STOP" (RI-1) SIGN SHOULD BE PLACED AS NEAR TO THE STOP BAR AS PRACTICAL. THE SIGN SHOULD BE PLACED TO MAXIMIZE VISIBILITY WITHIN THE RANGE OF OFFSETS SHOWN.
2. THE "YIELD" (RI-2) SIGN SHOULD BE PLACED AS NEAR TO THE YIELD MARKINGS AS PRACTICAL. THE SIGN SHOULD BE PLACED TO MAXIMIZE VISIBILITY WITHIN THE RANGE OF OFFSETS SHOWN.

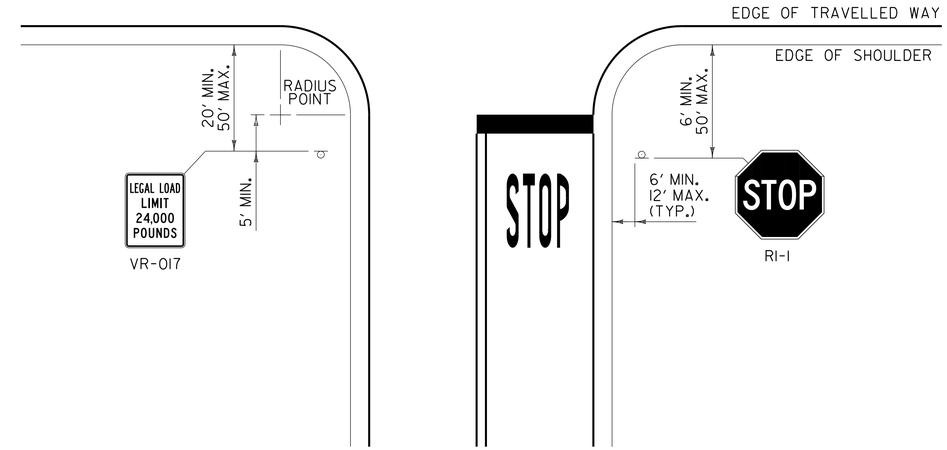

LEGAL LOAD LIMIT AND STOP SIGNS AT INTERSECTIONS WITH TOWN HIGHWAYS

NOTES:

1. THE "STOP" (RI-1) SIGN SHOULD BE PLACED AS NEAR TO THE STOP BAR AS PRACTICAL. THE SIGN SHOULD BE PLACED TO MAXIMIZE VISIBILITY WITHIN THE RANGE OF OFFSETS SHOWN.

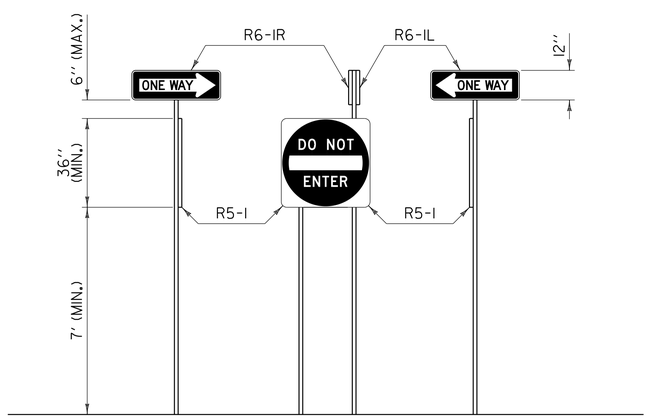

DO NOT ENTER ASSEMBLY

GENERAL NOTES:

1. WHEN INSTALLED, STREET NAME SIGNS SHOULD BE INSTALLED PERPENDICULAR TO APPROACHING MAINLINE TRAFFIC AND SHALL BE POSITIONED IN SUCH A WAY AS TO ENSURE THE BEST POSSIBLE VISIBILITY TO APPROACHING MAINLINE TRAFFIC FROM EACH DIRECTION. STREET NAME SIGNS MAY BE INSTALLED ABOVE SIDE ROAD STOP SIGN. IN CASES WHERE THE SIDE ROAD STOP SIGN POSITION WOULD NOT BE SUITABLE FOR A TOP-MOUNTED STREET NAME SIGN, OR OTHER SITE-SPECIFIC CONSTRAINTS, THE STREET NAME SIGN MAY BE INSTALLED INDEPENDENTLY ON EITHER CORNER OF THE INTERSECTION. THE STREET NAME SIGNS SHALL BE INSTALLED A MINIMUM OF SIX FEET FROM EDGE OF PAVEMENT ON THE MAINLINE ROUTE TO THE NEAREST EDGE OF SIGN.
2. STREET NAME SIGNS WITH A LENGTH EXCEEDING 42 INCHES SHALL BE INSTALLED ON TWO POSTS. NO MORE THAN TWO POSTS SHALL OCCUPY AN EIGHT FOOT TRAVEL PATH, UNLESS PROTECTED BY BARRIER.
3. THE "STOP" (RI-1) SIGN SHALL NOT BE MOUNTED LESS THAN FIVE FEET IN HEIGHT TO THE BOTTOM OF THE SIGN.

REV.	DATE	DESCRIPTION
0	OCT. 26, 2015	ORIGINAL APPROVAL

OTHER STANDARDS REQUIRED: NONE

VTRANS AND FHWA APPROVAL ON FILE WITH CONTRACT ADMINISTRATION

STANDARD SIGN PLACEMENT

VTrans Working to Get You There VERMONT AGENCY OF TRANSPORTATION

STANDARD

T - 56

Lake Champlain Wayside Exhibit Manual

History | Nature

Culture | Recreation

Lake Champlain Basin Program

Lake Champlain Wayside Exhibit Manual

Second Edition

Produced by a partnership between the Lake Champlain Basin Program, the Lake Champlain Byways Partnership, and the Chittenden County Regional Planning Commission.

Copy: Jim Brangan and Maja Smith, Lake Champlain Basin Program
Design: Maja Smith, Lake Champlain Basin Program

Second Edition, April 2004

For More Information

Lake Champlain Basin Program
54 West Shore Road
Grand Isle, VT 05458
1.800.468.LCBP (NY & VT only) or 802.372.3213
www.lcbp.org

Download all completed exhibits and this manual on-line at:
www.lcbp.org/wayside/index.htm.

The Lake Champlain Basin Program provides assistance with planning, interpretive writing, and designing wayside exhibits. Contact us!

Acknowledgements

The Lake Champlain Basin Program acknowledges the following individuals for their assistance in developing the Lake Champlain wayside exhibit template in 2000:

John Dimura, New York State Canal Corporation
Deborah Doyle-Schechtman, Vermont Arts Council
Mark Eldridge, City of Burlington
Farar Elliott, Consultant
Larry Gobrecht, NYS Office of Parks, Recreation and Historic Preservation
Carolyn Harding, Plattsburgh/North Country Chamber of Commerce
Janet Kennedy, Lake Champlain Byways
Debbie Morse, Lake Champlain Birding Trail
Marcy Neville, Moriah EDZ
Debra Sachs, Chittenden County Regional Planning Commission
Paul Vachon, The Vergennes Partnership
Bonnie Waninger, Northwest Regional Planning Commission
Virginia Westbrook, Champlain Valley Heritage Network

This second edition was produced under U.S. Environmental Protection Agency grant #LC991923-01, in coordination with the New England Interstate Water Pollution Control Commission. Financial assistance was also provided by the Chittenden County Regional Planning Commission through a Federal Highway Administration National Scenic Byways program grant (#SB-2003-VT-50330) administered by the Vermont Agency of Transportation.

The first edition was also supported by financial assistance from a National Park Service grant #1443CA-1600-95-006; the Chittenden County Metropolitan Planning Organization; and Lake Champlain Byways through the New York State Scenic Byways Program of the Federal Highway Administration and the Transportation Equity Act for the 21st Century of 1998.

Cover images clockwise from upper left: Detail of "The Battle of Lake Champlain," by J.O. Davidson, 1884, courtesy of the Battle of Plattsburgh Association; photograph by Jeff Nadler; photograph by Paul Boisvert; and "Village Tavern," by John Lewis Krimmel, 1813, oil on canvas, courtesy of the Toledo Museum of Art.

Table of Contents

Introduction 2
Overview
Questions to Consider
Project Steps: From Planning to Installation

Project Planning 4
Introduction
Project Organization
Project Budget
Interpretation: Telling the Story
Site Planning
Copy, Photos, and Design

Design and Development 6
From Sketches to Comprehensive Layouts
The Grid System
Typography
Logos and Identification
Option A: Full Spread
Option B: The Block
Color
Bilingual Exhibits
Panel Sizes and Orientation

Fabrication, Installation and Maintenance 12
Panel Fabrication
Base and Frame Fabrication
Installation
Maintenance

Whitehall, New York, circa 1900.
Courtesy of the Whitehall Historical Society.

Introduction

Overview

In 2000, a group of planners, tourism representatives, historians, and natural/cultural resource managers identified a need for unified standards and guidelines for interpretive signs in the Champlain region of Vermont, New York, and Québec. In response, the Lake Champlain Basin Program (LCBP) convened these stakeholders to develop and design an outdoor wayside exhibit template for use by organizations and municipalities in the Lake Champlain Basin.

Using this information, the LCBP published the Lake Champlain Wayside Exhibit Manual in 2001. The LCBP has provided in-kind design services grants to organizations using this template for projects that address priorities in the management plan *Opportunities of Action*. This successful program has generated more than 100 new wayside exhibits in the Lake Champlain Basin.

A unified approach to wayside interpretation helps local communities place their unique stories in a broader context. A readily recognizable interpretive sign encourages visitors to stop and learn about another piece of the Champlain Valley's story. The result is a richer sense of history, nature, and culture, and a stronger regional identity among residents and visitors.

Encouraging linkages with the Richelieu Valley of Québec, the LCBP supports bilingual exhibits and provides support for translation services. Applicants for design services grants should contact the LCBP.

LCBP Wayside Exhibit Locations

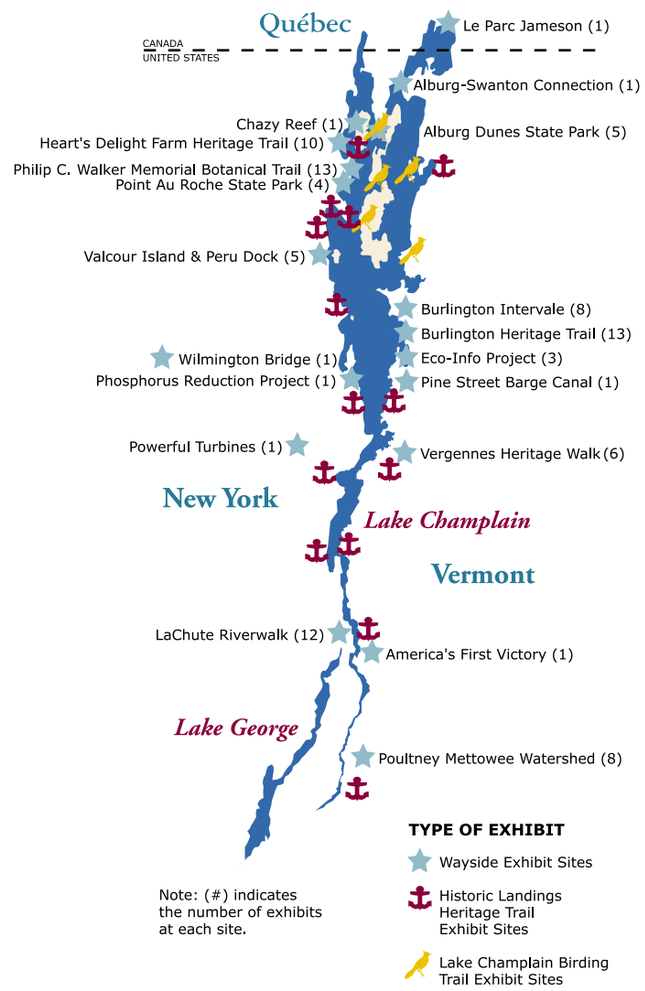

QUESTIONS TO CONSIDER

To ensure a smooth and efficient process of developing effective exhibits, there are a few questions you should consider from the start:

1) What are your interpretive objectives for the specific site or sites? What is the essence of the message or story that you want to convey?

2) Who will be working on the project and what is everyone's specific role? How do you reach consensus to satisfy both local and international audiences?

3) What visitors do you expect? Are there any special considerations that should be made for children, families, international visitors, and those with disabilities? To what extent should the exhibit address Americans with Disabilities Act accessibility guidelines?

4) What other information exists about your story, including publications, audiovisual shows, films, and audio cassettes? How will your exhibit relate to other media?

5) Do you need any sign permits?

6) What are your budget constraints?

7) What is your timetable? When do you want to break ground?

Project Steps: From Planning to Installation

Below are the specific steps to successfully complete a wayside exhibit project. These serve as guidelines and can be adapted to meet individual needs. Detailed explanation is provided in the pages to follow.

PLANNING

Form a Wayside Exhibit Team
project coordinator

Select a Site(s)
wayside exhibit team

Develop a Project Plan
project coordinator

Identify a Budget
project coordinator

Submit Proposed Plan to LCBP
wayside exhibit team

→

DESIGN AND DEVELOPMENT

Research Information & Images
exhibit planner

Tell the Story
exhibit planner

Review & Revise Text
LCBP & wayside exhibit team

Translate Text (if desired)
translator

Layout Design
LCBP

Review & Revise Design
LCBP & wayside exhibit team

Coordinate Production Package
LCBP & project coordinator

→

FABRICATION INSTALLATION MAINTENANCE

Fabricate Panel
contractor

Fabricate Base
contractor

Installation
site manager

Maintain Exhibit
site manager

Project steps adapted from *Wayside Exhibit Guidelines: The ABCs of Planning, Design, and Fabrication*, United States Department of Interior, National Park Service, National Center for Recreation and Conservation and the Harpers Ferry Center.

Project Planning

"Interpretation is an information service, a guiding service, an educational service... an inspirational service. Interpretation aims at giving people new understanding, new insights, new enthusiasm, and new interests."

-Yorke Edwards

Introduction

Wayside exhibits are excellent tools for informing visitors. They can interpret a specific location and relate individual sites to an overall theme or story. Their message reaches a large number of people. They are relatively inexpensive to maintain or replace. Wayside exhibits are initially more expensive to produce than brochures, but do not require costly reproductions.

However, wayside exhibits are only effective if developed, designed, and located correctly. Unfortunately too many wayside exhibits present long, complicated messages that do not get read. Others are located in areas that have little relation to their topic. Some are poorly designed, making the message difficult to understand. The goal of this manual is to provide a basic framework for planning and creating effective and successful interpretive wayside exhibits.

Project Organization

A strong organizational structure is an essential part of developing quality interpretive signs. Ideal wayside exhibit projects are structured as follows.

Wayside Exhibit Team: A Wayside Exhibit Team is comprised of representatives from the project's sponsors, stakeholders, property managers, and interested individuals. The team provides advice and personal insight to the Project Coordinator.

Project Coordinator: The success of the project is the responsibility of the Project Coordinator. He works with the Wayside Exhibit Team to determine interpretive themes, exhibit locations, and site topics. The coordinator edits and approves interpretive text and graphics. Together with the LCBP, he contacts fabricators, negotiates contracts, and facilitates the completion of the final products. The Project Coordinator might also serve as the Exhibit Planner.

Exhibit Planner(s): Ideally, each interpretive wayside exhibit has a champion, often a volunteer. Exhibit Planners are responsible for the historical research, text, and graphics selection.

Exhibit Designer: The Exhibit Designer is responsible for the design and layout of the exhibit panel. The LCBP will provide design services, as resources permit, to organizations in the Champlain region for projects that meet eligibility criteria, including the goals of the LCBP's management plan, *Opportunities for Action*. Once a project proposal has been accepted, graphic designers on the LCBP's staff will work with the text and graphics provided by the Wayside Exhibit Team to create a presentation that is harmonious and pleasing to the eye. (Note: The template may be used by other designers for interpretive work.)

Project Budget

The total fabrication cost for a standard 24"x36" horizontal wayside exhibit is approximately $900. In addition to the standard 24"x36" panel, other dimensions are available, as shown on page 11. Estimated costs for various sized exhibits are shown on page 12. There are other costs to consider when planning a budget. For each exhibit, plan on investing approximately $300 for coordination and $300 for research and development. Volunteers can reduce a project's coordination and development costs. Remember, costs will decrease as the number of exhibits increase.

Interpretation: Telling the Story

Principles of Successful Interpretation:

1) Interpretation is provocation, not just information. Illustrate with analogies, quotes, metaphors, and examples. Use text that encourages visitor interaction:

- *"Look for the…"*
- *"Can you hear the…?"*
- *"Imagine the…"*
- *"Touch the…"*
- *"See if you can find the…"*
- *"Smell the…"*

2) The best interpretation is succinct. Use short sentences. Concentrate on one subject. Don't worry about including all of the details. Visitors usually ignore long, complex messages. Avoid creating a "textbook on a stick."

3) Individual exhibits should complement each other by presenting a unified theme. This helps advance a project's organizational structure and provides visitors with a better understanding of the site's significance.

4) Help visitors relate the exhibit's topic to their own lives. Use familiar terms and personal language. Use everyday objects and events to illustrate the past, such as: "In 1889, horses were as common as automobiles are today."

5) Use photos, maps, and images to illustrate your point. Use stimulating and revealing graphics—avoid duplicating what can be seen.

6) Reveal message conclusions through unique or unusual viewpoints.

7) Accuracy is essential. Make sure your facts are correct—mistakes on interpretive exhibits live for a very long time!

8) Have fun. Be creative. Learn a little.

Site Planning: Location, Location, Location

The Wayside Exhibit Team should brainstorm exhibit locations and topics at a project's beginning. The group should list as many topics and locations as possible. Listing potential exhibits helps determine the project's overall theme and allows for more flexibility in siting exhibits.

The Project Coordinator should visit proposed exhibit sites with the locale's property manager. This on-the-ground visit is essential. A property manager's working knowledge of the landscape can help: eliminate weak sites; avoid safety hazards and vandalism; locate exhibits in accessible locations; and choose sites with vistas of the exhibit's topic.

Copy, Photos, and Design

There is a wealth of information out there. Local historians and experts, university libraries, and town, regional, and state historical societies are excellent sources of folklore, facts, and photographs.

Effective wayside exhibits contain less than 300 words and feature no more than four graphic images. The Exhibit Planner should provide the Project Coordinator and the LCBP with exhibit copy along with a selection of photographs or graphics for scanning. Once copy is approved and graphics selected, the LCBP will design a layout for review before digital files are sent to a panel fabricator. Original graphics—photographs, artwork, and maps—reproduce much better than duplicates.

VISITORS REMEMBER

- 10% of what they hear;
- 30% of what they read;
- 50% of what they see;
- 90% of what they do—if an exhibit encourages interaction and stimulates thought, it fulfills its purpose by reaching almost all site visitors.

SAMPLE WAYSIDE EXHIBIT COPY

Trail Name
Burlington Heritage Trail

Title
Steamboats and Shortcuts

Sub Heading
King Street Dock

Main Text
Imagine the scene here in 1825. The dock is crowded with saddle horses, ox carts, fancy horse buggies, pigs, goats, cows, chickens, piles of freight, and people. There are farmers, soldiers, merchants, and sailors. It's noisy. Workmen are yelling, whistles are blowing, and horses are neighing. The smell of barnyard animals, wood smoke from the ferry's smokestack, and food cooking fills the air. Even though the scene is very different today, the Lake Champlain Transportation Company's mission is the same—to safely deliver passengers across Lake Champlain.

Photo Caption
The Roosevelt—the last wooden-hulled ferry on Lake Champlain—served for 36 years. The president of the Lake Champlain Transportation Company himself sank the boat by chopping holes in its hull when it had outlived its usefulness in 1959. Today, the Roosevelt rests at the bottom of the broad lake before you.

"Through interpretation, understanding; through understanding, appreciation; through appreciation, protection."

– Freeman Tilden

Design and Development

From Sketches to Comprehensive Layouts

Once copy is written and images and graphics collected, the LCBP carefully reviews materials for content in preparation for the design phase. A designer is visually oriented and examines copy and images from that perspective. With physical site considerations in mind, the designer assists in selecting photographs and illustrations that best tell the story. Because graphic images are the most important element of an exhibit—a picture is worth a thousand words—clarity and quality of image are paramount. Originals are preferred whenever possible.

The designer organizes material in layers of importance based on the copy's underlying message. One image is chosen to be the primary image, around which all other elements are designed. As a first step, the designer sketches alternative layouts for consideration. Once a conceptual direction is chosen, the designer precisely lays out the panel. Headings, main text blocks, captions, and graphics are carefully sized and positioned on a grid system.

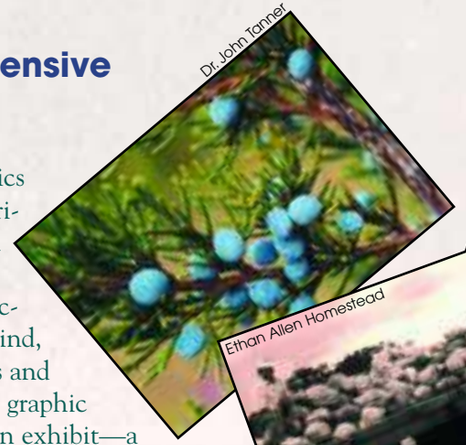
Dr. John Tanner

UVM Special Collections

Ethan Allen Homestead

Fort Ticonderoga

W.H. Miner Institute

VT DHP

Dave Menke

Viewsfromabove.com
Charles Fell

Ticonderoga Historical Society, Hancock House

LCBP

UVM Special Collections

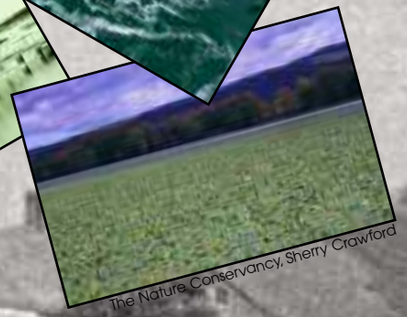
The Nature Conservancy, Sherry Crawford

Design and Development

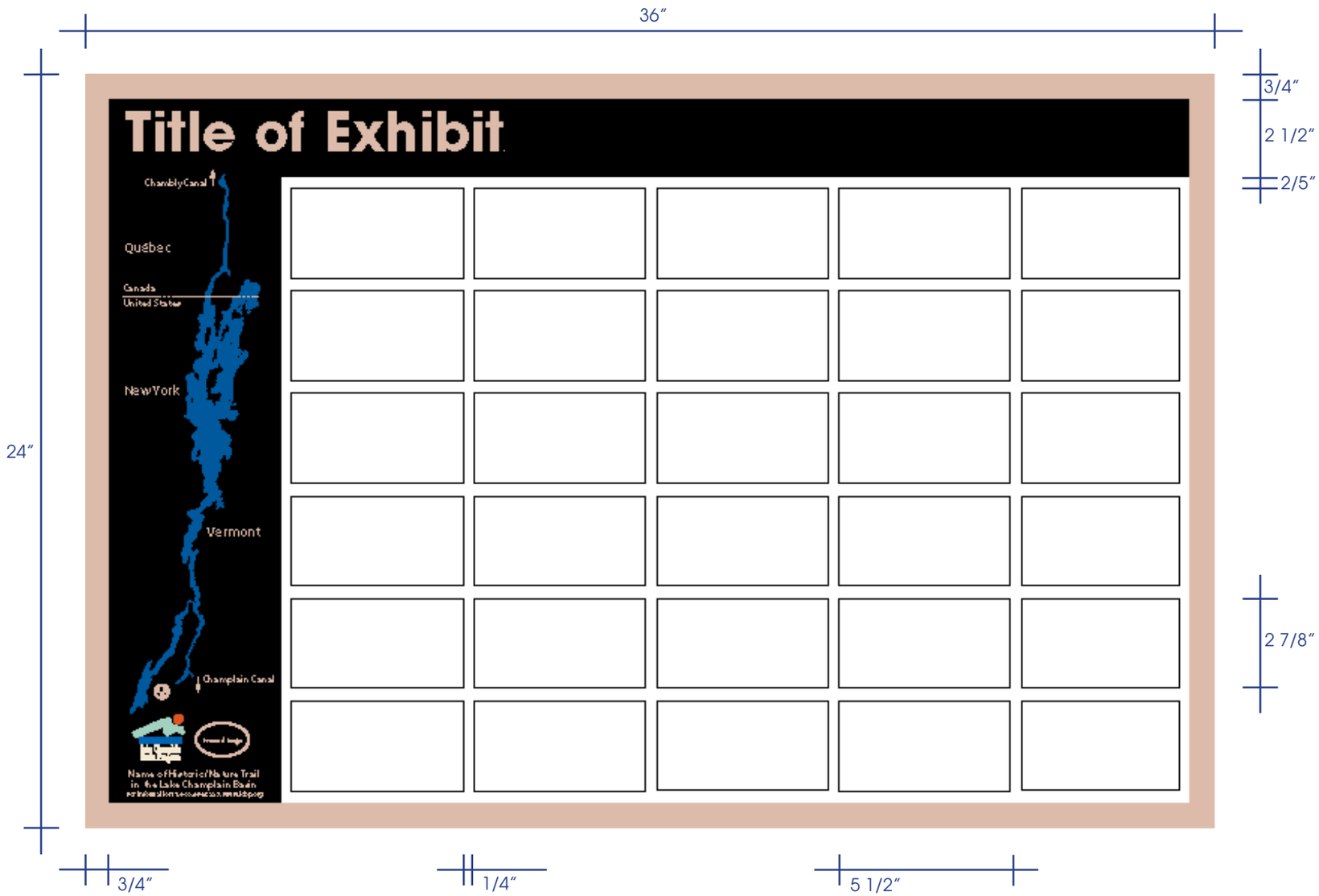

The Grid System

The LCBP wayside exhibit template is similar to the National Park Service and the NYS Canal Corporation wayside exhibit grid systems. The grid organizes text and graphics in an orderly fashion, making it easy for visitors to understand the information presented. It also lays the foundation for a consistent and unified look, linking wayside exhibits at different locations around the lake. The title bar, lake column, colors, and typography are standard elements found on each exhibit, creating a recognizable identity throughout the region. Although all exhibits adhere to these standards, each is carefully designed for individual expression according to site considerations, message, and graphics composition.

The standard LCBP template includes two variations based on this grid. These are shown on the next two pages.

Design and Development

Typography

Typography has been chosen to achieve an accessible, legible, and inviting presentation. Choice of type size depends on reading distance, height, and importance of information. Typefaces are mixed in a hierarchical fashion to convey levels of information and emphasis.

Logos and Identification

Wayside exhibits using the LCBP template display the LCBP logo in the bottom left-hand corner. There is also space for one or two additional logos of the Wayside Exhibit Team's choice.

The trail or project name and brief contact information, including telephone number and web site address, appear below the logos.

Option A: Full Spread

This option utilizes one primary image, over which type and secondary images are placed.

Main Text
Goudy
29 point

Caption
Goudy Bold
Italic 20 point

Subheading
Myriad Bold
26 point

Feature Labels
Goudy Bold
Italic 24 point

Title
Avant Garde
Bold 122 point

Canal Identifier
Myriad Bold
22 point

US/Canadian Border
Myriad Bold
22 point

State/Province Identifier
Myriad Bold
32 point

You Are Here
Myriad Bold
18 point

Sponsor/Name
Myriad Bold
28 point

For More Info
Myriad Bold
18 point

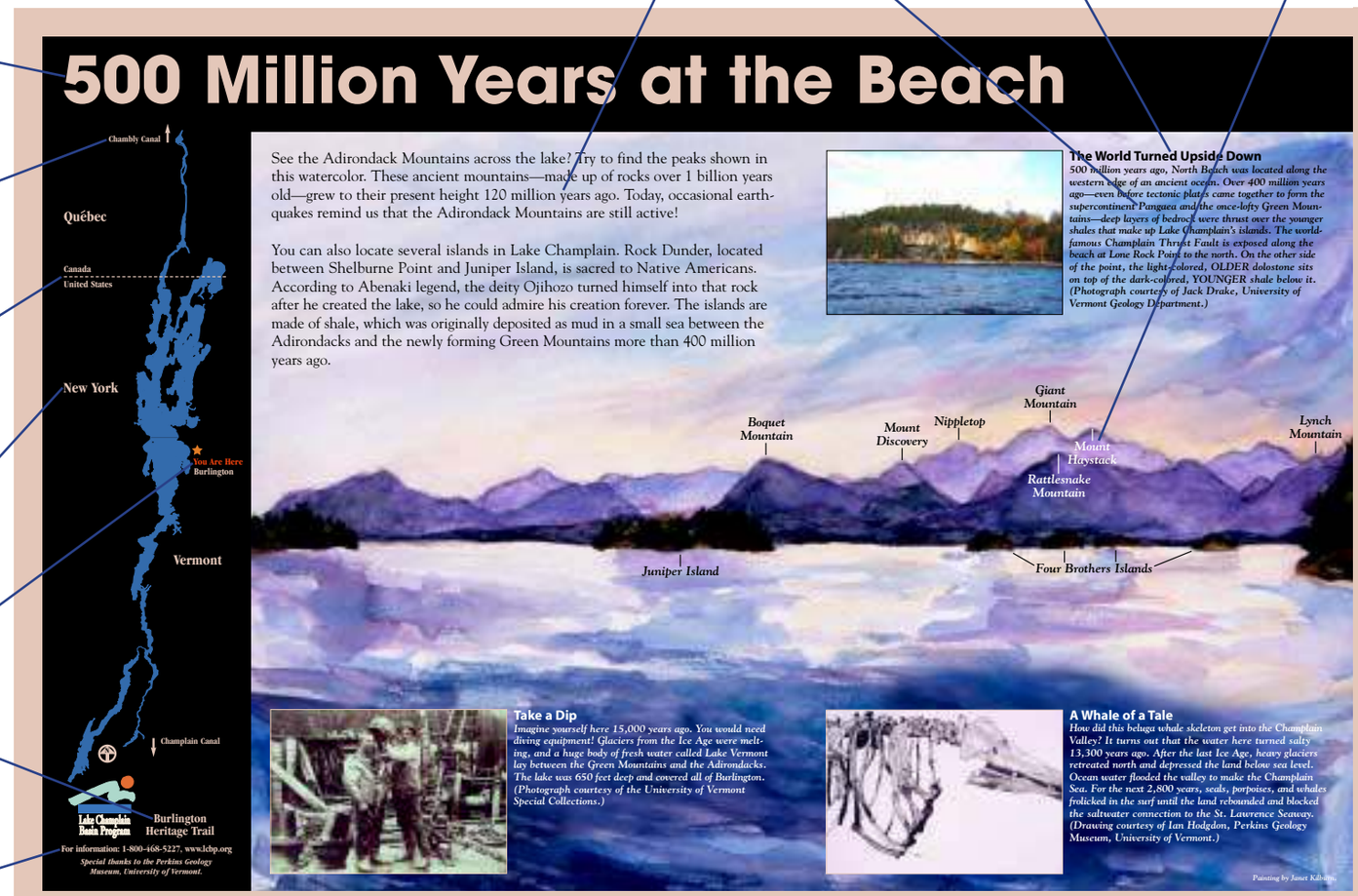

The Burlington Heritage Trail, Burlington, VT.

Option B: The Block

This option utilizes a primary image with type and secondary images generally placed outside the primary image in a colored block.

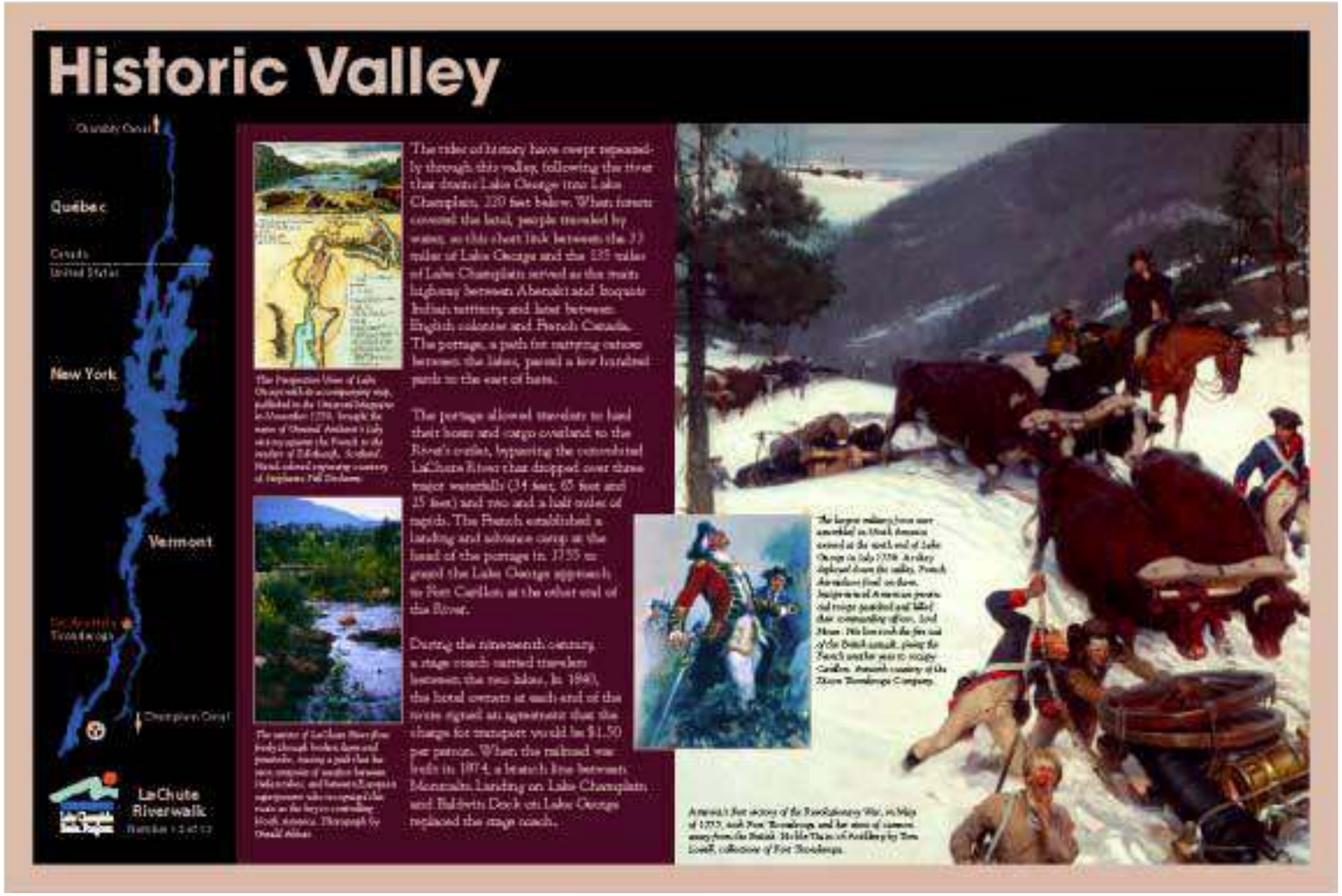

The LaChute Riverwalk, Town of Ticonderoga, NY.

Pantone 301 C

Pantone 4685 C

Black

Color

The template includes three standard colors: blue, black, and beige.

Blue is used exclusively for the lake graphic; beige is used for type, image frames, and the aluminum frame around the panel; and black is used for text and as background color on the title bar and the lake column.

For the background color of the block template, there are four colors from which to chose, as shown below.

Pantone 222 C

Pantone 302 C

Pantone 4685 C

Pantone 3165 C

Note: Swatches may vary slightly from actual pantone colors. Please refer to a coated *Pantone Color Formula Guide*, an accurate method for the selection, specification, communication, reproduction, matching and control of Pantone Matching System colors, the international printing, publishing and packaging color language.

Design and Development

Bilingual Exhibits

The LCBP recognizes our bilingual region and opportunities for cross-border promotion, and encourages the use of bilingual exhibits. This manual offers a template specifically designed to accommodate translated text in both English and French.

Bilingual exhibits are approximately 16 percent wider than a standard exhibit. The LCBP can make arrangements for text translations in a project's design and development phase.

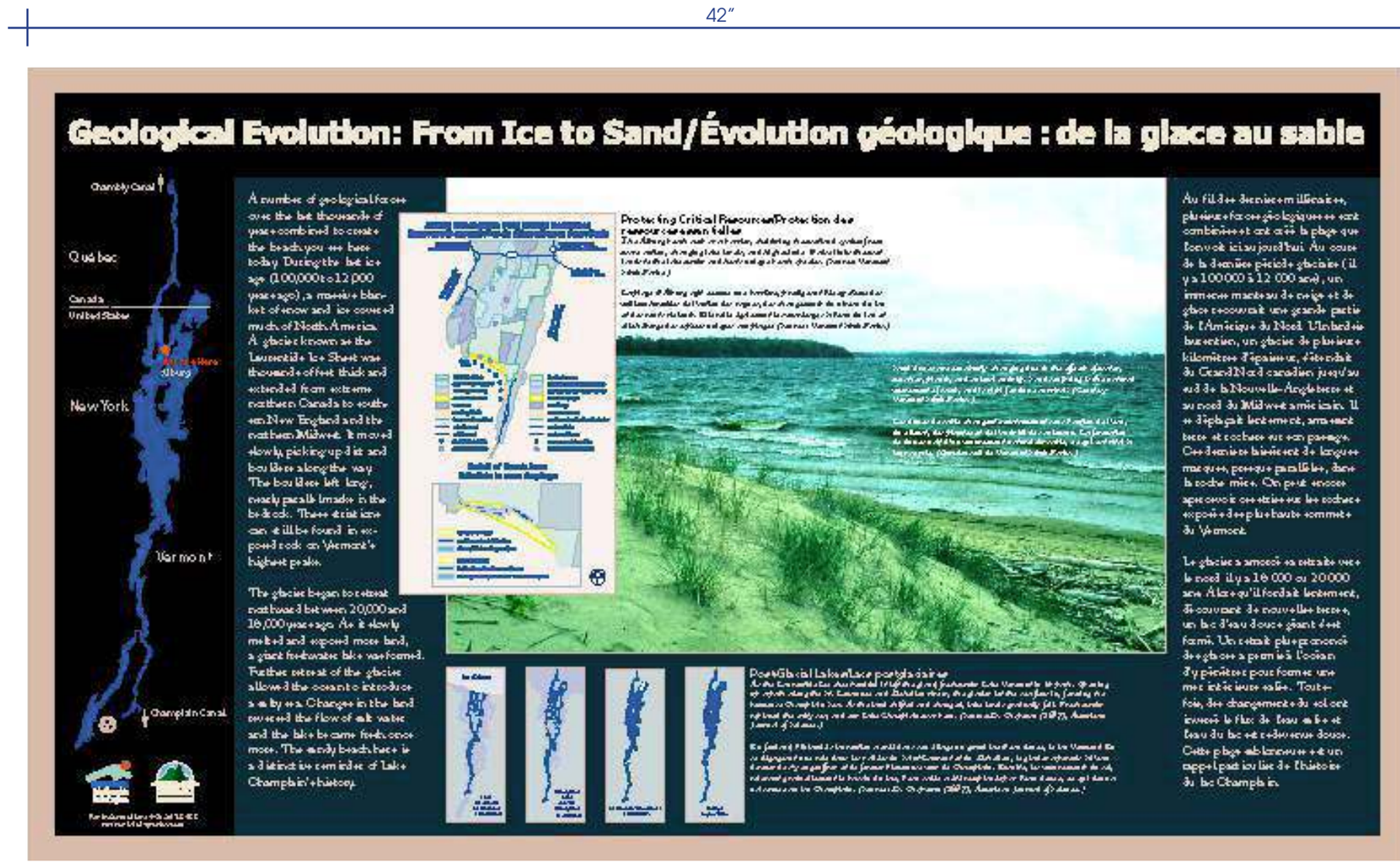

Alburg Dunes State Park, Alburg, VT.

Design and Development

A. 24” x 36”

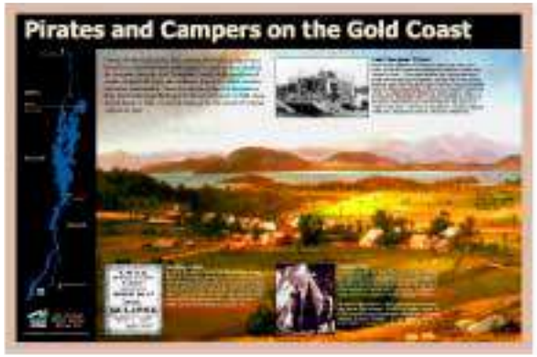

Low-Profile Panel

C. 18” x 24”

Low-Profile Panel

E. 36” x 48”

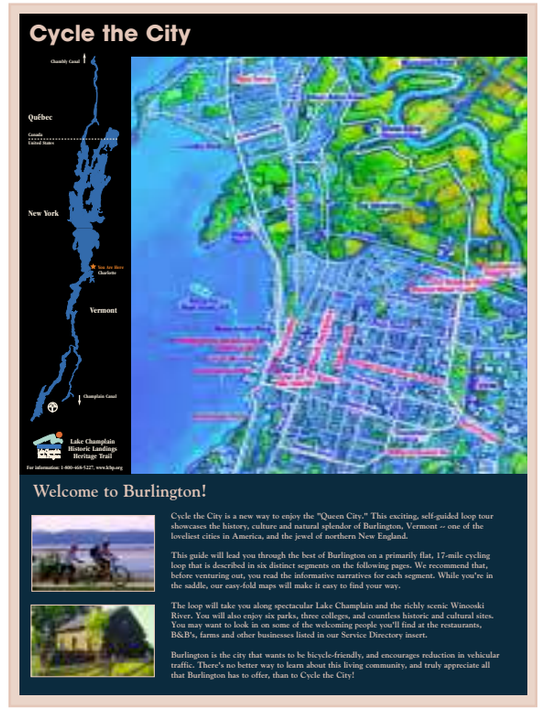

Upright Panel

B. 24” x 42”

Bilingual Low-Profile Panel

D. 12” x 17”

Site Marker

Panel Sizes and Orientation

The LCBP wayside exhibit design comes in a variety of sizes depending on the message being conveyed. Low-profile horizontal panels (A, B, C, & D) often tell a story or interpret a specific site or feature. Site markers (D) are designed to be part of a series of displays along a thematic trail, such as a nature walk. Upright panels (E) provide practical travel information, safety tips, and illustrations of special destinations.

Panel A is the most commonly used size for interpretive panels. Panel B is specifically designed for a bilingual presentation. Panels A, C, D, & E are designed for one language, however panel E could be adapted to be bilingual. A range of estimated prices is included on page 12.

Fabrication

Panel Fabrication

Working with a contractor, wayside exhibits are fabricated through full-color ink-jet digital imaging onto a high-pressure laminate material made for exterior use. Specially developed printing papers are digitally imaged, then impregnated with melamine resins and a UV resistant over-laminate, and finally pressed with extreme heat and pressure. The LCBP generally orders exhibit panels at 1/8 inch thickness for framed exhibits or 1/2 inch if a frame is not preferred.

Considering cost, new advancements in digital technology, quality of product, and ease of production, the digital print is the clear choice for most. In vandalism tests, high pressured laminates scored well for scratch and cigarette resistance and spray paint and magic marker removal. Most carry a ten-year guarantee.

The LCBP will assist organizations seeking to select a fabricator that best suits their needs by sharing our current information about product lines and costs. A range of estimated costs from various companies is noted in the adjacent table. The LCBP is willing to work with a panel fabricator of an organization's choice, provided the product meets certain quality standards.

The LCBP recommends obtaining exhibit lab tests prior to final product development to ensure color match and layout accuracy.

ESTIMATED PANEL COSTS

Panel Size	1/8 inch	1/2 inch
12x17 inches	$70 - $160	$90 - $180
18x24	$130 - $250	$180 - $290
24x36	$250 - $400	$340 - $470
24x42	$310 - $450	$420 - $530
36x48	$490 - $660	$670 - $810

Prices may vary. Costs do not include packaging, shipping, and a lab sample. Plan on adding $50-$100 per exhibit for these additional services, depending on size of order. Lead-time: 30-45 days.

Base and Frame Fabrication

The base and frame product the LCBP uses is a proven durable cast aluminum, widely used by the National Park Service. It generally consists of: 1) legs and a backing plate; or 2) legs with a backing plate that frames the panel with a 3/4 inch lip.

Using the frame option, the exhibit panel slides directly into the frame and its backing plate, making it easy to assemble and replace. This frame is attached to one or two legs, depending on the size of the exhibit. The legs are set in concrete.

Panels without frames are directly screwed to a backing plate which is then attached to the legs. The choice is primarily an aesthetic preference, however the frame does make the exhibit a little more durable and difficult to vandalize. While the difference in initial cost is not significant, a 1/2 inch panel will cost more to replace if choosing the option without a frame. Another choice is a railing mount, which requires no legs. In this case the frame and/or a backing plate is attached directly to a railing.

ESTIMATED BASE COSTS

Panel	Base w/o frame	Base w/ frame
12x17 inches	$150 - $385	$190 - $470
24x18	$170 - $385	$350 - $470
24x36	$310 - $385	$450 - $470
24x42	$330 - $530	$460 - $620
36x48 Upright	N/A	$490 - $730
36x48 Double Upright	N/A	$910 - $1,450
36x48 Triangular Upright	N/A	$1,190 - $2,170
36x48 Triple inline Upright	N/A	$1,240 - $2,170

Prices may vary. Shipping may be included, depending on the company. Lead time: 40-45 days. Note: 1/8 inch panels can be used with bases using frames, while bases not using frames require a 1/2 inch panel.

Installation and Maintenance

Installation

The site manager is generally responsible for installing wayside exhibits. However, a wayside exhibit team may need to rely on volunteers to accomplish this task.

Double Inline Upright

Low Profile Inground Unit

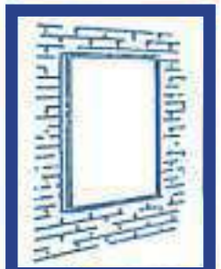

Wall Mount Frame

Low Profile Surface Mount

The LCBP does not install exhibits, although we will guide an organization with technical assistance. Exact locations and positions must be well planned. The project coordinator should visit the site with the site manager to determine the best location and orientation.

Integrate exhibits into the landscape as much as possible. In remote areas, install with as little disturbance to the surface as possible. In not-so-remote areas, wayside exhibits can draw many people. In such cases, locate exhibits on level, hard-surfaced pads to minimize the impact.

Base systems are relatively easy to install. Specific instructions can be obtained from the LCBP or the manufacturer.

Maintenance

After all your hard work, please do not neglect your wayside exhibit. A little maintenance can go a long way to improve the appearance and increase the exhibit's life. Periodic maintenance using the following cleaning tips greatly improves how visitors will view and remember your message and presentation.

Cleaning Tips

• Use a popsicle stick and water (a hose if possible), to clean the weep, or drainage holes, at the bottom of the panel frame so that debris does not collect.

• For simple cleaning, mild soap and water is best. Rinse with clean water after washing. Avoid using abrasive cleaners or acids.

• Graffiti (paint, crayon, felt tip markers) can be removed using an organic solvent, such as *Simple Green*, or similar non-abrasive citrus-based cleaners.

Triangular Upright

• Very stubborn graffiti may require something stronger, such as mineral spirits. Do not use lacquer thinner or acetone, as they can damage the surface of your panel. Always rinse with clean water.

• Minor blemishes, nicks, marks, or burnishes and very light scratches can be concealed using a polymer based car wax.

• Persistent stains can be removed with a two minute exposure to household bleach. Always rinse with clean water after this procedure.

Getting Started

Contact the LCBP for help in starting the process of developing your wayside exhibit. We are happy to discuss your ideas and to answer any questions that you may have. We look forward to hearing from you soon!

State of Vermont
Division for Historic Preservation
Deane C. Davis Building, 6th Floor
One National Life Drive, Montpelier, VT 05620-0501
www.accd.vermont.gov/historic-preservation

[phone] 802-828-3540

Agency of Commerce and Community Development

Vermont Roadside Historic Site Markers

The Vermont Historic Site Marker program commemorates facts, persons, events, and places prominently identified with the history of the nation, state, or region. The text for each proposed marker shall be reviewed and edited by the manager of the marker program and the staff of the Vermont Division for Historic Preservation (VDHP) and shall be approved by the Advisory Council on Historic Preservation (ACHP).

For markers on a state right-of-way: the Agency of Transportation (AOT) is responsible for approving the site location in consultation with VDHP and ACHP. For markers on town/city right-of-way: town or city managers in coordination with town garages shall be consulted in determining the location of markers. For markers on private property: VDHP shall work with owners, who must sign a Memorandum of Understanding prior to the installation.

Criteria for Evaluation of Roadside Historic Site Markers

(Approved by the Advisory Council for Historic Preservation, October 2014)

1. The site is associated with an event(s) that has made a significant contribution to the broad patterns of history:
   - Site of an event of prehistoric or historic significance
   - Site marking unique, exemplary, or important surviving physical evidence of Vermont's past

2. The site is associated with the lives of persons significant in our past:
   - Birthplace of a significant individual
   - Burial place of a significant individual
   - Building or site associated with significant individual or group or business

3. The site embodies the distinctive characteristics of a type, period, or method of construction, or that represent the work of a master, or that possess high artistic values:
   - Exemplary example of a specific period of construction or architectural expression
   - Rare/unique method of construction
   - Representative work of master builder or architect/firm

4. During the selection process, the ACHP will also consider the following factors:
   - Reputation of the individual or group to be recognized
   - Interest of the public in historic context
   - Accessibility to the marker (ability to be viewed by larger public)

- Enhancement of the setting and preservation of the site
- Applicants ability to pay costs for installation and perpetual maintenance
- Determination of local, state, and/or national significance

Please note the following rules and exceptions:

1. No marker shall be erected to commemorate a living person.
2. In order for an historic event to be eligible for commemoration with a marker, the event must have occurred at least fifty years ago.
3. A place or person must have attained its significance at least fifty years ago, although there are exceptions if the event, place, or person is of extraordinary historical significance.
4. Markers will be not be placed to commemorate a building or structure that is no longer extant, unless one of the above criteria is met.

State of Vermont
Division for Historic Preservation
Deane C. Davis Building, 6th Floor
One National Life Drive, Montpelier, VT 05620-0501
www.accd.vermont.gov/historic-preservation

[phone] 802-828-3540

Agency of Commerce and Community Development

Vermont Roadside Historic Site Markers

The Vermont Historic Site Marker program commemorates facts, persons, events, and places prominently identified with the history of the nation, state, or region. The text for each proposed marker shall be reviewed and edited by the manager of the marker program and the staff of the Vermont Division for Historic Preservation (VDHP) and shall be approved by the Vermont Advisory Council on Historic Preservation (ACHP).

For markers on a state right-of-way: Agency of Transportation (VTrans) is responsible for approving the site location in consultation with VDHP and ACHP. For markers on town/city right-of-way: town or city managers in coordination with town garages shall be consulted in determining the location of markers. For markers on private property: VDHP shall work with owners, who must sign a Memorandum of Understanding prior to the installation.

Procedure for Developing and Submitting a Roadside Marker and the Approval Process

1. Research and Write the Roadside Marker Text. Research the topic by consulting multiple primary and secondary sources. Write a roughly 100-word text, following the "Highway Marker Writing Style" (see below). It is often helpful to seek assistance from local and regional historical associations and governmental entities in researching and writing the proposed text. Changes will likely be made by VDHP staff to the proposed text to bring it in line with program criteria and writing style; edited text will be forwarded for applicant's approval.

Property owners should be consulted prior to submittal of an application for clarity of topic, verification of facts, and concurrence.

2. Suggest a Suitable Marker Location. The marker preferably should be placed on public land or a highway right-of-way. If it is on private land, then the VDHP must receive the owner's consent. VDHP and VTrans staff will evaluate the proposed location based on its historic association with the marker subject and safety. Ultimately, VTrans staff will have the final determination in approving and selecting the location based primarily on traffic safety. Be sure in your application to specify the highway route number and the physical site (e.g., U.S. Route 7, 0.2 miles south of Interstate 89) and indicate the location on a street or highway map accompanying the application. Photographs of the location must be provided.

3. Submit Your Application Packet to VDHP for Review. VDHP staff and advisors to the marker program will review all applications. After review, VDHP will decide whether the topic meets the marker program criteria. If the topic is considered appropriate for a state marker, the text will be formally presented to the ACHP for approval at one of its regularly scheduled meetings. The ACHP has final authority for the topics and content of all state markers.

All applications must be submitted 60 days before to the ACHP meeting.

4. Work with VDHP to Revise or Refine the Marker Text. Before submitting a text for approval to the ACHP, a review committee composed of members of the ACHP, VDHP, and selected historians will review the text. Any major questions about the text that arise will be discussed with the applicant, including further documentation, if necessary, to support the marker text. If changes to the text are warranted, VDHP staff will work closely with the applicant, or the applicant's author, to produce a mutually agreed upon text. Because VDHP and the ACHP bear the ultimate responsibility for what appears on a marker, they reserve the right to edit a text for accuracy, clarity, brevity, and thoroughness.

Please be aware that a marker's text must be limited to 765 characters (letters and spaces).

5. Final Decision of the ACHP. VDHP will provide a applicant advance notification of when the marker will be presented to the ACHP at the appropriate meeting. The meeting is open to the public and applicants may attend. VDHP will notify the applicant of the ACHP's findings and any related comments. Once a text is approved, VDHP will send the applicant a copy of the final board-approved text.

6. Meet with the Agency of Transportation. After the marker is approved by the ACHP, VDHP will notify VTrans to review the proposed site. **VTrans is responsible for approving the site if located on a state right-of-way,** and may select another location if the applicant's choice is unsuitable for traffic safety reasons.

7. Manufacturing and placement of the Marker. VDHP will contract and pay for the manufacture of the cast aluminum marker and have it delivered to an approved location. VDHP will notify the foundry that casts the marker and provide it with the final board-approved text.

- Casting and delivery take approximately 90 days once the foundry has been notified.
- Installation shall be coordinated with VDHP and depends on the location (i.e.: state right-of-way, town right-of-way, or private property).

8. Schedule Unveiling Ceremony. The process for ordering and manufacturing markers is determined by several factors including the workload of VDHP and VTrans, the schedule and agendas of the ACHP, and manufacturing and shipping delays arising at the foundry; thus, VDHP cannot be held responsible for meeting local deadlines for any planned dedication event. For that reason, if a sponsoring organization or individual desires to hold an unveiling ceremony, VDHP should be notified and consulted well in advance about the schedule to coordinate with the foundry and VTrans for the marker's timely arrival and installation by the community or applicant prior to a ceremony. The applicant should only fix scheduling of a ceremony after VDHP and the foundry can confirm a realistic shipping date for a marker.

The marker's applicant/sponsor will arrange publicity for unveiling ceremony in cooperation with VDHP.

Roadside Historic Site Marker Writing Style

To ensure stylistic consistency among state markers, VDHP staff will revise and edit draft texts. The goal is to provide as much accurate and interesting information as possible in a limited space. Applicants can help by following these suggestions when writing their drafts.

- Aim for 90 to 100 words; it is better to be a little long than short for editing

- Spell out numbers less than 10, otherwise use Arabic numerals (one, two, etc., but 10, 237, 10,000, etc.).
- Do not use honorary titles such as Mr. and Mrs., but do use and abbreviate occupational titles and ranks (the Rev., Col., Maj. Gen., Dr., etc.).
- Do not use commas before or after Jr., Sr., II, etc. (e.g. Joseph Smith Jr. founded the Latter Day Saint movement).
- Write nicknames as follows: Wilson “Snowflake” Bentley.
- On first use, give a person's full name as he or she used it or as it is best known (e.g. Frederick Billings, Maria von Trapp, Chester A. Arthur), but on subsequent use only the last name.

Markers are intended to present historically accurate information as objectively as possible. Therefore, markers will not editorialize or assign value judgment to events or people. Unless there is sufficient documentary evidence to establish authenticity without question, no “firsts” or other superlative terms will be used. As markers are intended to be permanent features of the landscape, please also avoid making observations in the text about current conditions of buildings or land. The text should be submitted with the understanding that it will likely undergo further editing and revision by VDHP staff in consultation with the applicant or original author.

Please remember that the marker may be read from a moving vehicle, so it is best to put the most important information at the beginning.

Placement of Roadside Historic Site Markers

1. The marker shall be placed on a state or town right-of-way as near as possible to the site it marks, at least 200 feet from the nearest adjacent sign.
    a. VDHP shall coordinate with VTrans or the town garage regarding placement and installation.
2. Markers will not be placed on a curve or hill in such a place at which a slowing car could cause a traffic hazard. There should be a minimum of 500 feet visibility; 1200 feet is desirable.
3. Wherever possible the marker will be placed at a pull-off where an automobile will be able to park completely off the traveled portion of the highway. The pull-off should be 10 feet wide and between 200 and 400 feet long. The sign should be placed approximately 4 feet back from the pull-off.
4. The marker shall be located so that its post does not interfere with underground utilities. ("DIG SAFE")
5. Placement of markers on private property require a Memorandum of Agreement

Roadside Historic Site Marker Application Form

Proposed Marker Topic/Name:

Proposed Physical Location of Marker:

(Please include a map and photographs showing the proposed location for the marker.)

Physical address (e.g., 4588 Chester Arthur Road, 12 miles northeast of Fairfield)**:**

Latitude/Longitude of location:

Town/City and County where proposed marker would be located:

Has the owner of the property associated with the event or person proposed for documentation by the Site Marker been consulted and concurred?

Who was consulted and by whom:

Date of consultation:

Proof of owner concurrence:

Is the proposed marker associated with a "mitigation" agreement stemming from a Section 106 environmental review or Act 250 project? If so, please provide details about who is involved with the project and the appropriate project codes.

When is the proposed date for an unveiling or dedication ceremony:

Applicant's Information:

Name:

Organization:

Address:

Email:

Telephone:

Author's Information: (if author of marker text is different from applicant):

Name:

Address:

Email:

Telephone:

Property Owner's Information:

NOTE: If the marker proposed is on a specific property or references a specific physical property beyond VTrans right-of-ways, VDHP needs the property owner's information and signature prior to reviewing the proposal.

Name:

Address:

Email:

Telephone:

Property Owner's Signature:

Proposed Text for the Marker: VDHP staff will work closely with the applicant, or the applicant's author, to produce a mutually agreed upon text. Because VDHP and the ACHP bear the ultimate responsibility for what appears on a marker, they reserve the right to edit a text for accuracy, clarity, brevity, and thoroughness. It must NOT exceed **765** letter and spaces (765 letter-spaces or 17 lines with 45 letters and spaces per line maximum). Use additional sheets as necessary.

Bibliographical Sources Consulted. Multiple primary and secondary sources are required. Please photocopy and attach each source. Each bibliographical source listed below should include the following information: author, title, and publisher, the publisher's location, and date of publication**:**

Send the completed application and supplementary materials in one package to:

Roadside Historic Site Markers
Division for Historic Preservation
National Life Building,
Deane C. Davis Building, 6th Floor
Montpelier, VT 05620-0501
laura.trieschmann@vermont.gov
802-828-3222

(VDHP use)
Submittal Date:_____
Recommended Reviewers:_____
Property Owner Concurrence:_____
Advisory Council Review Date: _____ Approval: yes _____ no _____