BURLINGTON INTERNATIONAL AIRPORT

**TERMINAL INTEGRATION PROJECT**

**AIP No. TBD**

ADDENDUM NO. 5

July 31, 2020

---

The attention of Bidders submitting proposal for the subject Contract is called to the following Addendum to the Plans and/or Specifications. The revisions set forth herein, whether of omissions, additions or substitutions are to be included in and form a part of the Proposal submitted. The bidders must acknowledge receipt of this Addendum on Page BP-1 of the Bid Proposal, using the Addendum number and date shown above.

## SPECIFICATIONS – FRONT END

### Addendum Item 5.01 – Receipt, Preparation and Opening of Bids

**REVISE,** under Instructions to Bidders, Page IB-1, Section 1 *RECEIPT, PREPARATION AND OPENING OF BIDS*, the first paragraph that reads (as previously modified by Addendum Item 3.01):

> "Sealed Bids (for the purpose of this notice, the term "bid" can be taken to collectively mean the Design-Build Entity's price proposal and technical proposal) for the **BTV Terminal Integration Project** will be received at the Office of the Director of Aviation, Burlington International Airport, **1200 Airport Drive, #1, South Burlington, VT 05403,** until **2:00 PM**, local time, **Wednesday, August 12, 2020** and there, at said office, at said time, be confirmed and acknowledge, via teleconference, that all requirements have been met and the Design-Build Entity's proposal will advance to the evaluation stage. Bids shall be submitted in accordance with Section 1, Article 3 *SUBMISSION REQUIREMENTS* of the Request for Proposal."

To Read:

> "Sealed Bids (for the purpose of this notice, the term "bid" can be taken to collectively mean the Design-Build Entity's price proposal and technical proposal) for the **BTV Terminal Integration Project** will be received at the Office of the Director of Aviation, Burlington International Airport, **1200 Airport Drive, #1, South Burlington, VT 05403,** until **2:00 PM**, local time, **Wednesday, September 2, 2020** and there, at said office, at said time, be confirmed and acknowledge, via teleconference, that all requirements have been met and the Design-Build Entity's proposal will advance to the evaluation stage. Bids shall be submitted in accordance with Section 1, Article 3 *SUBMISSION REQUIREMENTS* of the Request for Proposal."

***[Note: This Addendum item changes the deadline for the receipt of bids. All references to the bid deadline throughout the Request for Proposal document shall be revised to show the new bid deadline of September 2, 2020 at 2:00 P.M. local time.]***

## SPECIFICATIONS – SECTION 1 – *SUBMISSION REQUIREMENTS AND EVALUATION CRITERIA*

### Addendum Item 5.02 – Schedule of Events

**REVISE,** under Section 1, Article 2, Subsection 2.6 *SCHEDULE OF EVENTS,* the following events and their corresponding dates (as previously modified by Addendum Item 3.02):

| | |
|---|---|
| Questions due | July 17, 2020 |
| Statement of Qualifications due | August 12, 2020 |
| Price Proposal Opening Date | August 19, 2020 |
| D-B Team Interviews | August 31, 2020 |
| Selection Committee recommendation to Commission | September 4, 2020 |

To Read:

| | |
|---|---|
| Questions due | August 14, 2020 |
| Statement of Qualifications due | September 2, 2020 |
| Price Proposal Opening Date | September 9, 2020 |
| D-B Team Interviews | September 18, 2020 |
| Selection Committee recommendation to Commission | September 24, 2020 |

### Addendum Item 5.03 – Submission Deadline

**REVISE,** under Section 1, Article 3, Subsection 3.1 *SUBMISSION DEADLINE,* the entire section that reads (as previously modified by Addendum Item 3.03):

> Three (3) paper copies of the Technical Proposal, one (1) copy of the Price Proposal, and one (1) electronic copy of each (on a USB thumb drive, SD card, or equivalent) shall be delivered in a sealed envelope to:
>
> Mr. Larry Lackey
> Director of Engineering & Environmental Compliance
> Burlington International Airport
> 1200 Airport Drive, #1
> Aviation Administration Offices
> South Burlington, VT 05403
>
> Proposals must be received at the address above no later than 2:00 P.M. on Wednesday, August 12, 2020, local time. Any proposal received after that time shall not be considered.

To Read:

> Three (3) paper copies of the Technical Proposal, one (1) paper copy of the Price Proposal, and one (1) electronic (PDF) copy of the Technical Proposal only (on a USB thumb drive, SD card, or equivalent) shall be delivered in a sealed envelope to:

Mr. Larry Lackey
Director of Engineering & Environmental Compliance
Burlington International Airport
1200 Airport Drive, #1
Aviation Administration Offices
South Burlington, VT 05403

Proposals must be received at the address above no later than 2:00 P.M. on Wednesday, September 2, 2020, local time. Any proposal received after that time shall not be considered.

## GENERAL – RESPONSES TO BIDDER QUESTIONS RECEIVED THROUGH JULY 24, 2020

### Addendum Item 5.04 – Bidder Question and Response

**Question:** The RFP package lays out the City of Burlington's contractual documents which do not represent the intended contractual relationship between Owner and the Design Build entity. The City's documents are written for lump sum projects with some sections specifically mentioning state highway, payment terms tied to quantity measurement, inspection and unit pricing and pavement experience. The AIA Design Build suite of documents (AIA A141) were developed specifically for the project's intended delivery method and identify unique responsibilities of each party, general requirements, work execution, Owner's contractors, compensation criteria, change and dispute resolution, insurances, bonds, etc.

***Response:*** *The referenced AIA A141 documents, or documents with substantially similar language, will be utilized and tailored to fit the specifics of this project. The City of Burlington Attorney's Office will review the draft language prior to circulation for signatures. Attachments A through G will still apply and will become part of the final Contract.*

### Addendum Item 5.05 – Bidder Question and Response

**Question:** Addendum item #3.10 states Jacobs will coordinate permitting efforts for the Vermont ACT250 permit and South Burlington zoning/DRB permits; confirm this includes the sub suite of Agency of Natural Resources and/or South Burlington permits such as Wastewater and Water Supply.

***Response:*** *Yes, Jacobs will coordinate these efforts utilizing plans, reports, and other information as provided by the Design-Build entity.*

### Addendum Item 5.06 – Bidder Question and Response

**Question:** Is there any additional information on the equipment that will be located in the Security Checkpoint area so that heat gains for cooling loads can be calculated.

***Response:*** *The Airport does not have specific information related to the heat output for existing or future TSA equipment to be located in the SSCP area. These loads should be estimated by the Design-Build entity.*

**Addendum Item 5.07 – Bidder Question and Response**

**Question:** Based on preliminary calculations and occupancy assumptions, the schedule CFM values for the two rooftop units are much higher than expected. Are these RTU's intended to serve a future expansion? Should we stick with the requested 17,700 CFM RTU's as indicated or qualify accordingly?

***Response:*** *This question will be answered in a future Addendum.*

**Addendum Item 5.08 – Bidder Question and Response**

**Question:** Please advise on glycol percentage of the existing hydronic system?

***Response:*** *Bidders should conduct an evaluation of the existing hydronic system prior to bidding. Refer to the Instructions to Bidders, Section 1 for information related to scheduling a site visit.*

**Addendum Item 5.09 – Bidder Question and Response**

**Question:** Please confirm the code lists should be updated to include IPC 2018 and 2020 Vermont CBES.

***Response:*** *Yes. Please also note the amendments as per November 2019, shortly after the study commenced.*

https://publicservice.vermont.gov/sites/dps/files/documents/2020%20VT%20Commercial%20Building%20Standard%20Amendments%20Rev%201.1.pdf

**Addendum Item 5.10 – Bidder Question and Response**

**Question:** Please provide all available existing as-builts for the renovated space.

***Response:*** *Refer to Addendum No. 4, Item 4.01.*

**Addendum Item 5.11 – Bidder Question and Response**

**Question:** In order to determine if demand control ventilation is required we need to know the expected occupancies for the SSCP space (1st floor) and the Concourse Space (2nd floor). Please advise.

***Response:*** *This question will be answered in a future Addendum.*

**Addendum Item 5.12 – Bidder Question and Response**

**Question:** Please advise which control system(s) are currently on campus as we will need to tie into / extend for the new proposed work.

***Response:*** *Bidders should conduct an evaluation of the existing control systems prior to bidding. Refer to the Instructions to Bidders, Section 1 for information related to scheduling a site visit.*

**Addendum Item 5.13 – Bidder Question and Response**

**Question:** Specifications state that security is to provide strikes/mortise locks, who shall do lock installations and is there a door hardware schedule?

***Response:*** *There is no door schedule. The contractor is responsible for lock installation.*

**Addendum Item 5.14 – Bidder Question and Response**

**Question:** Are there any doors that need Biometric readers? If not biometric, assume that all doors that will need Keypad readers?

***Response:*** *The Airport currently uses card, keypad, and fingerprint reader to enter secure areas. This triplicate method should be provided between sterile and non-sterile areas.*

**Addendum Item 5.15 – Bidder Question and Response**

**Question:** Are there any doors that will need to be Read-In/Read-Out scenario?

***Response:*** *No.*

**Addendum Item 5.16 – Bidder Question and Response**

**Question:** Will all the doors be cabled to the same location? COMM ROOM 104?

***Response:*** *All doors will be cabled to COMM ROOM 104, as long as it doesn't exceed distance requirements.*

**Addendum Item 5.17 – Bidder Question and Response**

**Question:** Will all the cameras be cabled to the same location? COMM ROOM 104?

***Response:*** *All cameras will be cabled to COMM ROOM 104, as long as it doesn't exceed distance requirements.*

**Addendum Item 5.18 – Bidder Question and Response**

**Question:** There are two man doors and what looks to be one overhead door at the existing loading dock area, are these doors already secured?

***Response:*** *These are active and secured doors accounted for in the Airport's ASP.*

**Addendum Item 5.19 – Bidder Question and Response**

**Question:** There is one man door adjacent to the South Concourse area, is this door already secured?

***Response:*** *Yes, this door is currently secured with a keypad required for exit.*

**Addendum Item 5.20 – Bidder Question and Response**

**Question:** Please advise where the existing head end locations are for low voltage systems?

***Response:*** *This is unknown by the Airport staff. Prior to bidding, it is recommended that interested bidders conduct an evaluation of the existing building systems and any adjacent utilities to determine what upgrade or replacement of existing systems or utilities may be required. Refer to the Instructions to Bidders, Section 1 for information related to scheduling a site visit.*

**Addendum Item 5.21 – Bidder Question and Response**

**Question:** Please confirm the $/SF costs for light fixtures indicated in Appendix C should not include lighting controls. It is for the purchase of fixtures only? Furthermore, is it the intent for the EC to carry the allowances listed in Appendix C?

***Response:*** *This cost is intended for the fixtures only, not installation or controls.*

**Addendum Item 5.22 – Bidder Question and Response**

**Question:** In Appendix C there is no line item for the exterior cove lighting. Please advise on $/LF allowance to be carried if this is the intended approach.

***Response:*** *$150/LF, per page 15 of the Appendix C – see "entry canopies".*

**Addendum Item 5.23 – Bidder Question and Response**

**Question:** Reference "View 2 – Workshop; South Apron" image that was released in addendum #2. There is an existing louver that looks to be located above the Maintenance Office 109. Please advise what this louver serves as there is no indication upon review of the existing south terminal reference drawings H1.1 and H2.2.

***Response:*** *This louver is part of the ventilation system for the chiller upgrade completed in 2010. The design drawings for this system are attached to this Addendum.*

**Addendum Item 5.24 – Bidder Question and Response**

**Question:** Please clarify the any replacement requirement for the existing hoistway between the ground level and the basement, should Additive Alternate No. 1 be awarded.

***Response:*** *While the airport is considering long-term replacement solutions for the basement mechanical system, it acknowledges that for the foreseeable future, some access to the exiting hoistway opening will need to be provided. In Alternate 1, please provide a temporary provision for a 7'-0" tall x 10'-0" wide minimum, roll-up access door for near-term maintenance needs as well as a steel plate cover over the rough opening of the hoistway. In order to avoid trip hazards, the existing curb shall be removed and the new plate will need to be covered in a fashion that matches the proposed floor covering.*

**END OF ADDENDUM NO. 5**

One (1) Attachment follows:

1. BTV Chiller Upgrade Drawings (17 Sheets)

# BURLINGTON INTERNATIONAL AIRPORT
# CHILLER UPGRADE PROJECT

## DRAWING LIST


~~STRUCTURAL~~

| | |
|---|---|
| ~~D1~~ | ~~STRUCTURAL DEMOLITION PLAN~~ |
| ~~S1~~ | ~~STRUCTURAL PARTIAL BASEMENT PLAN~~ |
| ~~S2~~ | ~~STUCTURAL PARTIAL BASEMENT PLAN~~ |
| ~~S3~~ | ~~STRUCTURAL PARTIAL LOW ROOF FRAMING PLAN~~ |
| ~~S4~~ | ~~STRUCTURAL DETAILS AND NOTES~~ |

STRUCTURAL DRAWINGS NOT INCLUDED

MECHANICAL

| | |
|---|---|
| M000 | LEGEND AND ABBREVIATIONS |
| M100 | BASEMENT LEVEL MECHANICAL DEMOLITION/PROPOSED PLAN |
| M101 | FIRST FLOOR MECHANICAL PLAN |
| M102 | SECOND FLOOR MECHANCAL PLAN |
| M103 | PENTHOUSE AND ROOF DEMOLITION AND PROPOSED PLAN |
| M104 | ROOF DEMOLITION AND PROPOSED MECHANICAL PLAN |
| M400 | MECHANCAL SCHEMATIC |
| M500 | MECHANCAL SCHEDULES |
| M600 | MECHANICAL DETAILS |
| M700 | MECHANICAL CONTROLS |

ELECTRICAL

| | |
|---|---|
| E000 | ELECTRICAL LEGEND + SYMBOLS |
| E100 | BASEMENT LEVEL ELECTRICAL PLAN |
| E101 | FIRST FLOOR ELECTRICAL PLAN |
| E102 | PARTIAL ROOF DEMO/PROPOSED PLAN |
| E103 | MAIN TERMINAL PENTHOUSE AND ROOF ELECTRICAL DEMOLITION PLAN |
| E400 | ELECTRICAL ONE-LINE DIAGRAM AND DETAILS |



Hallam/ICS
38 Eastwood Dr., Suite 200
So. Burlington, VT 05403
Tel: 802.658.4891 Fax: 802.658.1457

McFarland-Johnson
40 Farrell Street
South Burlington, Vermont 05403
T 802.862-9381 F
802-862-7450


ISSUED FOR BID
APRIL 15, 2010

## ABBREVIATIONS & SYMBOLS

| | |
|---|---|
| AD | ACCESS DOOR |
| AFF | ABOVE FINISHED FLOOR |
| AFG | ABOVE FINISHED GRADE |
| AHU | AIR HANDLING UNIT |
| AP | ACCESS PANEL |
| AS | AIR SEPARATOR |
| ATC | AUTOMATIC TEMPERATURE CONTROLS |
| BI | BACKWARD INCLINED |
| BDD | BACKDRAFT DAMPER |
| BFP | BACKFLOW PREVENTER |
| BHP | BRAKE HORSEPOWER |
| BOD | BOTTOM OF DUCT |
| BOP | BOTTOM OF PIPE |
| BTU | BRITISH THERMAL UNIT |
| BTUH | BTU PER HOUR |
| CFM | CUBIC FEET PER MINUTE |
| CI | CAST IRON |
| CLG | CEILING |
| CO | CLEANOUT |
| COP | COEFFICIENT OF PERFORMANCE |
| CW | COLD WATER |
| DDC | DIRECT DIGITAL CONTROL |
| DIA | DIAMETER |
| DN | DOWN |
| E/A | EXHAUST AIR |
| EAT | ENTERING AIR TEMPERATURE |
| EER | ENERGY EFFICIENT RATIO |
| EF | EXHAUST FAN |
| ER | EXHAUST REGISTER |
| ESP | EXTERNAL STATIC PRESSURE |
| EWT | ENTERING WATER TEMPERATURE |
| EXIST | EXISTING |
| FA | FREE AREA |
| FC | FORWARD CURVED |
| FP | FIRE PROTECTION |
| FPM | FEET PER MINUTE |
| FT | FEET |
| GC | GENERAL CONTRACTOR |
| GPM | GALLONS PER MINUTE |
| GMU | GLYCOL MAKE-UP UNIT |
| GWB | GYPSUM WALL BOARD |
| HB | HOSE BIBB |
| HP | HORSEPOWER |
| HW | HOT WATER |
| HWH | HOT WATER HEATER |
| HWR | HOT WATER RETURN |
| HWS | HOT WATER SUPPLY |
| LAT | LEAVING AIR TEMPERATURE |
| LBS,# | POUNDS |
| LWT | LEAVING WATER TEMPERATURE |
| MBH | THOUSAND BTUH |
| MOD | MOTOR OPERATED DAMPER |
| NC | NORMALLY CLOSED |
| NEC | NATIONAL ELECTRIC CODE |
| NO | NORMALLY OPEN |
| NTS | NOT TO SCALE |
| OBD | OPPOSED BLADE DAMPER |
| O/A | OUTSIDE AIR |
| PD | PRESSURE DROP |
| PRV | PRESSURE REDUCING VALVE |
| PSI | POUNDS PER SQUARE INCH |
| R/A | RETURN AIR |
| RR | RETURN REGISTER |
| S/A | SUPPLY AIR |
| SD | SMOKE DAMPER |
| SP | STATIC PRESSURE |
| SR | SUPPLY REGISTER |
| TSP | TOTAL STATIC PRESSURE |
| TYP | TYPICAL |
| UG | UNDERGROUND |
| UH | UNIT HEATER |
| V | VENT |
| VAV | VARIABLE AIR VOLUME |
| VD | VOLUME DAMPER |
| VFD | VARIABLE FREQUENCY DRIVE |
| W | SANITARY WASTE PIPING |
| WCO | WALL CLEANOUT |
| | CONNECT NEW TO EXISTING |

## FITTINGS

- EXISTING WORK TO REMAIN
- NEW WORK ON PROPOSED DWGS. EXISTING WORK TO BE REMOVED ON DEMOLITION DWGS
- EXPANSION LOOP
- PIPE TURNING DOWN (PIPE DROP)
- PIPE TURNING UP (PIPE RISE)
- TEE UP (OFF TOP)
- TEE DOWN (OFF BOTTOM)
- PIPE DROP IN RUN
- PIPE DROP AND TURN
- TEE OFF TOP
- TEE OFF BOTTOM
- CROSS WITH RISER
- CONCENTRIC REDUCER
- ECCENTRIC REDUCER
- SCREWED UNION
- FLANGED UNION
- PIPE CAP
- PIPE GUIDE
- PIPE ANCHOR
- WALL SLEEVE
- FLEX CONNECTION
- PG — PRESSURE GAUGE
- TH — DIAL TEMPERATURE GUAGE
- FLOW SWITCH
- PITCH PIPE DOWN
- CLEANOUT END OF LINE
- AUTOMATIC AIR VENT W/PETCOCK
- PUMP
- PETES PLUG

## VALVES

- AUTOMATIC FLOW CONTROL
- BALL OR BUTTERFLY (SIZE DEPENDENT)
- CHECK
- BALANCING
- GATE
- GLOBE VALVE
- PRESSURE REGULATING
- RELIEF
- VALVE IN DROP BELOW
- VALVE IN VERTICAL
- 2-WAY ELECTRIC MOTOR
- 2-WAY PNEUMATIC
- 3-WAY ELECTRIC MOTOR
- 3-WAY PNEUMATIC
- WYE STRAINER
- WYE STRAINER W/VALVE
- BACK FLOW PREVENTER
- MANUAL VENT
- HOSE BIBB (SIDE VIEW)
- HOSE BIBB (PLAN VIEW)

## PIPING

- HWS — HOT WATER SUPPLY (HEATING)
- HWR — HOT WATER RETURN (HEATING)
- CHWS — CHILLED WATER SUPPLY
- CHWR — CHILLED WATER RETURN
- GCHWS — GLYCOL CHILLED WATER SUPPLY
- GCHWR — GLYCOL CHILLED WATER RETURN
- CDS — CONDENSER WATER SUPPLY
- CDR — CONDENSER WATER RETURN
- CD — CONDENSATE DRAIN
- G — NATURAL GAS PIPING
- FP — FIRE SPRINKLER PIPING
- CW — DOMESTIC COLD WATER
- W — SANITARY WASTE

## HVAC

- SUPPLY AIR DUCT (RISE UP)
- SUPPLY AIR DUCT (DROP DOWN)
- RETURN AIR DUCT (RISE UP)
- RETURN AIR DUCT (DROP DOWN)
- EXHAUST DUCT (RISE UP)
- EXHAUST DUCT (DROP DOWN)
- 6x6 — DUCT SIZE (FIRST DIMENSION SIDE SHOWN)
- R — RISE IN DIRECTION OF FLOW
- D — DROP IN DIRECTION OF FLOW
- ELBOW WITH TURNING VANES
- DOUBLE WALL DUCT
- END CAP
- 45° TAKE-OFF (RECTANGULAR)
- TRANSITION (RECTANGLE TO ROUND)
- TRANSITION (ROUND TO RECTANGLE)
- CONCENTRIC REDUCER
- ECCENTRIC REDUCER
- VOLUME DAMPER
- FIRE DAMPER
- M — MOTOR OPERATED DAMPER
- ACCESS DOOR (SCHEMATIC)
- FLEXIBLE CONNECTION
- SUPPLY ARROW
- RETURN ARROW
- T — THERMOSTAT

ISSUED FOR BID
APRIL 15, 2010

STATE OF VERMONT
WILLIAM R. MOORE
No. 5000
4/15/10

**BURLINGTON INTERNATIONAL AIRPORT**

SOUTH BURLINGTON
VERMONT

| No. | DATE | REVISION |
|---|---|---|
| | | |


HallamICS
38 Eastwood Dr., Suite 200
So. Burlington, VT 05403
Tel: 802.658.4891 Fax: 802.658.1457


BURLINGTON INTERNATIONAL AIRPORT
CHILLER UPGRADE
SO. BURLINGTON VERMONT

MECHANICAL LEGEND AND ABBREVIATIONS

| DRAWN | PROJ.No. |
|---|---|
| JAL | 15649.002 |
| CHECKED | DATE |
| RLM | 04/15/10 |

M-000

G:\DRAWINGS\15649.002 Chiller Upgrade\M-000.dwg Wednesday, November 17, 2010 12:48:16 PM rlm

## BASEMENT - MECHANICAL PLAN- DEMOLITION

SCALE: 1/8"=1'-0"

DEMOLITION NOTES:

1. NOTE: DEMOLITION WORK OF EXISTING CHWS/R PIPING IS TO BE DONE AFTER NEW CHILLER AND NEW CHILLED WATER PIPING IS INSTALLED.
2. REMOVE EXISTING 5" CHILLED WATER PIPING TO LOCATIONS SHOWN.
3. REMOVE EXISTING CHWS/R PUMPS AFTER NEW GCHWS/R PIPING HAS BEEN CONNECTED TO EXISTING COOLING COIL ON AHU.
4. REUSE 3-WAY CONTROL VALVE AND CONTROLS.

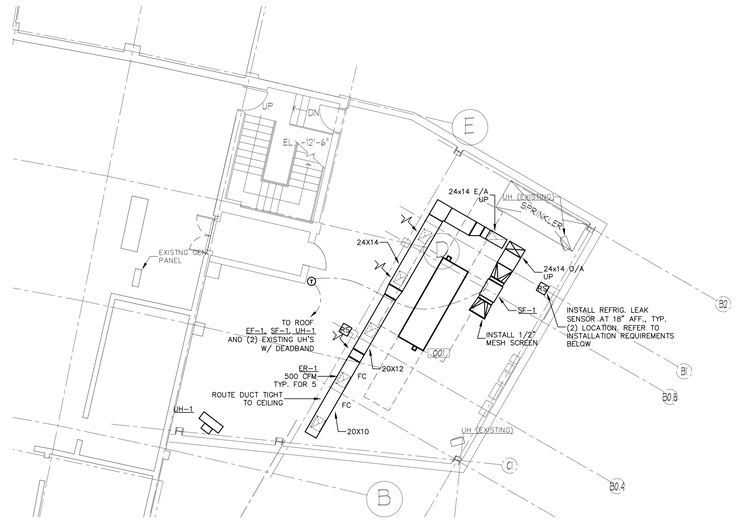


## BASEMENT - HVAC PLAN- PROPOSED

SCALE: 1/8"=1'-0"

REFRIGERANT MONITOR:

PHOTOACOUSTIC TYPE WITH CONTROLLER IN A NEMA 4 ENCLOSURE AND WITH SENSOR MODULE. SYSTEM SHALL BE UL APPROVED AND RATED FOR 115VAC, 60 HZ., SINGLE PHASE POWER SUPPLY AND A 40°F TO 100°F, NON-CONDENSING AMBIENT OPERATING ENVIRONMENT. SYSTEM SHALL BE FACTORY CALIBRATED FOR R-134A REFRIGERANT WITH MINIMUM DETECTION LEVEL CAPABILITY OF 20PPM, ACCURACY OF ±10% UP TO 1000 PPM, AND RESPONSE TIME OF 1 MINUTE OR LESS. CONTROLLER SHALL INCLUDE A DISPLAY FOR READOUT OF ACTUAL CONCENTRATION, INDICATORS FOR "POWER ON" "FAULT" CONDITION, A TEST BUTTON, AND A MANUAL RESET BUTTON. CONTROLLER SHALL INCLUDE (2) NO/NC DRY CONTACT RELAY OUTPUTS FOR REMOTE MONITORING OF LOW (25 PPM) AND HIGH (250PPM, 25% OF TLV-TWA) LEVEL ALARMS. SYSTEM SHALL INCLUDE DUAL HORN/LIGHT ALARM MODULES FOR MOUNTING IN THE MACHINERY ROOM AND EXTERIOR AT THE ROOM ENTRANCE. MECHANICAL CONTRACTOR IS RESPONSIBLE FOR A COMPLETE OPERATIONAL SYSTEM AND ALL ASSOCIATED HOOK-UP OF WIRING. MECHANICAL CONTRACTOR SHALL RETAIN THE SERVICES OF THE E.C. FOR ANY ELECTRICAL SUPPORT NECESSARY. HOWEVER, THE ELECTRICAL DRAWINGS WILL PROVIDE THE 120V EMERG. SYSTEM CIRCUIT.

1. MANUFACTURER: SUBJECT TO COMPLIANCE WITH REQUIREMENTS, PROVIDE REFRIGERANT MONITORS OF ONE OF THE FOLLOWING:

a. THERMAL GAS SYSTEMS, INC.
b. MINE SAFETY APPLIANCES (MSA) COMPANY
c. O-I-ANALYTICAL
d. GENESIS INTERNATIONAL

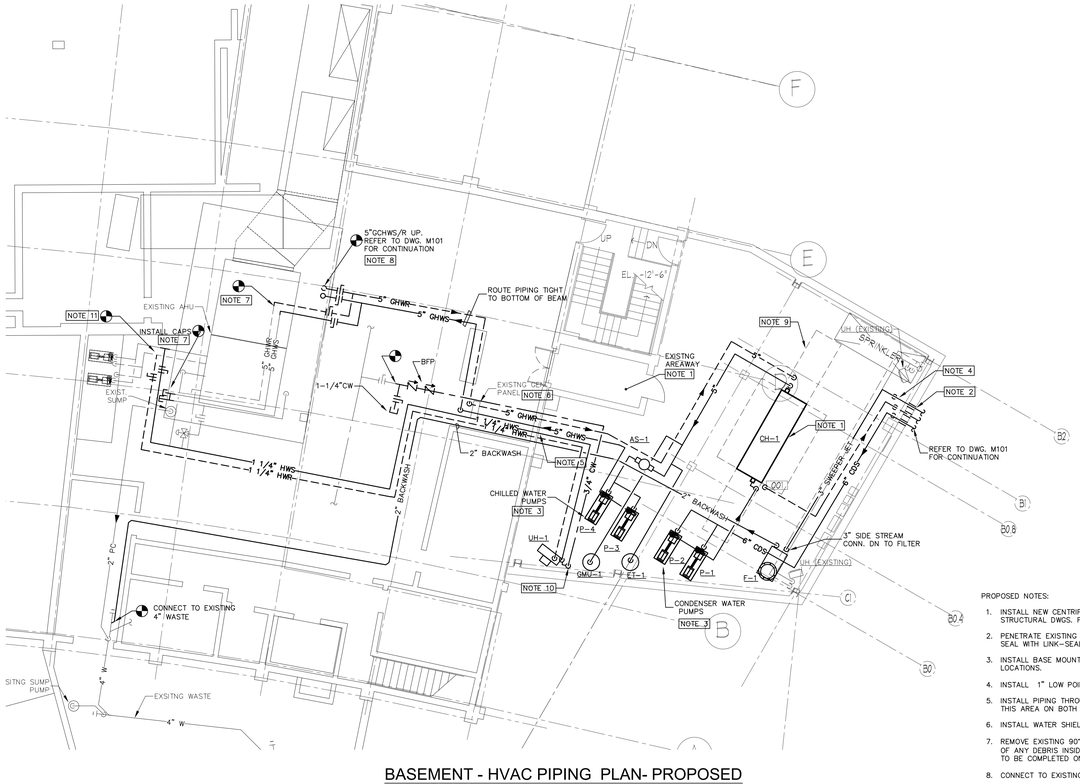


## BASEMENT - HVAC PIPING PLAN- PROPOSED

SCALE: 1/8"=1'-0"

PROPOSED NOTES:

1. INSTALL NEW CENTRIFUGAL CHILLER DOWN THROUGH EXISTING AREAWAY AND INSTALL AT LOCATION SHOWN. REFER TO STRUCTURAL DWGS. FOR MODIFICATIONS OF DOORWAY.
2. PENETRATE EXISTING FOUNDATION WALL AT THIS LOCATION. AVOID INTERFERENCE WITH SPRINKLER PIPES. SLEEVE AND SEAL WITH LINK-SEAL.
3. INSTALL BASE MOUNTED CONDENSER WATER PUMPS AND CHILLED WATER PUMPS ON HOUSEKEEPING PAD AT THESE LOCATIONS.
4. INSTALL 1" LOW POINT DRAINS AT THIS LOCATION WITH HOSE CONNECTION, EACH PIPE.
5. INSTALL PIPING THROUGH EXISTING CONCRETE WALL. COORDINATE WITH WITH ELECT. CONDUITS, J-BOXES, PIPING WITHIN THIS AREA ON BOTH SIDES OF WALL. SLEEVE AND CAULK PIPING.
6. INSTALL WATER SHIELD ON TOP OF EMERGENCY GENERATOR POWER PANEL TO ALLOW FOR ROUTING OF NEW PIPING.
7. REMOVE EXISTING 90° ELL AT RISER FOR BOTH SUPPLY AND RETURN AND EXAMINE PIPING INSIDE/OUT AND CLEAN RISERS OF ANY DEBRIS INSIDE PIPE AND INSPECT PIPING. CONNECT NEW 5" CHWS/R TO EXISTING 5"CHWS/R PIPING. THIS WORK IS TO BE COMPLETED ONCE EXISTING BASEMENT AHU IS CONNECTED TO NEW CHILLED WATER SYSTEM.
8. CONNECT TO EXISTING 5" CHWS/R RISERS UP THROUGH EXISTING CHASE.
9. SERVICE AREA FOR CHILLER SHOWN IN LIGHT DASHED AREAS.
10. PROVIDE CW MAKE-UP ON WALL WITH WALL HYDRANT FOR GLYCOL TANK.
11. CONNECT TO EXISTING 3"HWS/R AND ROUTE PIPING TO UNIT HEATER.

ADD ALTERNATE PRICING:

CONTRACTOR TO PROVIDE AN ADD ALTERNATE PRICING TO REMOVE EXISTING 5"CHWS/R RISERS IN CHASE AND INSTALL NEW 5" SET OF CHWS/R RISERS AND PIPE INSULATION.

ISSUED FOR BID
APRIL 15, 2010

STATE OF VERMONT
WILLIAM
BURLINGTON, VT
4/15/10

**BURLINGTON INTERNATIONAL AIRPORT**

SOUTH BURLINGTON
VERMONT

| No. | DATE | REVISION |
|---|---|---|
| | | |


HallamICS
38 Eastwood Dr., Suite 200
So. Burlington, VT 05403
Tel: 802.658.4891 Fax: 802.658.1457


BURLINGTON INTERNATIONAL AIRPORT
CHILLER UPGRADE
SO. BURLINGTON VERMONT

BASEMENT LEVEL
MECHANICAL DEMOLITION/PROPOSED

| DRAWN | PROJ.No. |
|---|---|
| JAL | 15649.002 |
| CHECKED | DATE |
| RLM | 04/15/10 |

M-100

G:\DRAWINGS\15649.002 Chiller Upgrade\M-100.dwg Wednesday, November 17, 2010 12:48:07 PM rlm

## FIRST FLOOR - MECHANICAL PLAN

SCALE: 1/8"=1'-0"

NOTES:

1. INSTALL NEW COOLING TOWER AT THIS LOCATION. REFER TO DRAWING M500 FOR MAKE AND MODEL OF COOLING TOWER. SEE STRUCTURAL DWGS. FOR TOWER SUPPORT AND ROOF REVISIONS.
2. INSTALL NEW DRAIN LINE AND OVERFLOW DRAIN LINE FOR COOLING TOWER. TERMINATE DRAIN LINES OPEN ENDED ABOVE PAVEMENT.
3. CONNECT TO EXISTING 3" DOMESTIC COLD WATER LINE IN SPRINKLER ROOM AND PENETRATE EXTERIOR WALL AND CONNECT TO COOLING TOWER MAKE-UP FLOAT VALVE. SLOPE PIPING FOR WINTER DRAINAGE.
4. PENETRATE CONCRETE WALL BELOW GRADE AT THIS LOCATION AND ROUTE IN BASEMENT PER DRAWING M100. COORDINATE LOCATION OF PIPING WITH SPRINKLER PIPES IN BASEMENT.
5. EXISTING 5" CHWS/R PIPING TO BE USED FOR NEW CHILLED WATER SYSTEM. CLEAN INSIDE OF EXISTING PIPING.
6. FOR NEW LOUVER INSTALLATION – CUT AND PATCH EXISTING SIDING, FRAMING AND GWB. CAULK LOUVER WATERTIGHT.

ADD ALTERNATE PRICING:

CONTRACTOR TO PROVIDE AN ADD ALTERNATE PRICING TO REMOVE EXISTING 5"CHWS/R RISERS IN CHASE AND INSTALL NEW 5" SET OF CHWS/R RISERS WITH PIPE INSULATION. PROVIDE PRICING TO REMOVE PORTION OF CHASE WALL AND PATCH AND PAINT TO ALLOW FOR INSTALLATION OF 5" PIPES.

ISSUED FOR BID
APRIL 15, 2010

STATE OF VERMONT
WILLIAM
R. KEYSER
NO. 5
4/15/10

**BURLINGTON INTERNATIONAL AIRPORT**

SOUTH BURLINGTON
VERMONT

| No. | DATE | REVISION |
|---|---|---|
| | | |


HallamICS
38 Eastwood Dr., Suite 200
So. Burlington, VT 05403
Tel: 802.658.4891 Fax: 802.658.1457


BURLINGTON INTERNATIONAL AIRPORT
CHILLER UPGRADE
SO. BURLINGTON VERMONT

FIRST FLOOR
MECHANICAL PLAN

| DRAWN | PROJ.No. |
|---|---|
| JAL | 15649.002 |
| CHECKED | DATE |
| RLM | 04/15/10 |

M-101

G:\DRAWINGS\15649.002 Chiller Upgrade\M-101.dwg Wednesday, November 17, 2010 12:47:56 PM rlm

## SECOND FLOOR - MECHANICAL PLAN

SCALE: 1/8"=1'-0"

NOTES:

1. CONNECT TO EXISTING 5" GCHWS/R PIPING IN CHASE AND ROUTE NEW 4" GCHWS/R TO EXIST. AHU IN PENTHOUSE.
2. 5" GCHWS/R PIPING UP TO CHILLER TO REMAIN AND BE USED FOR FUTURE. SEE DWG. M104 FOR CONTINUATION. CLEAN INSIDE OF PIPING FOR REUSE.
3. REMOVE A SECTION OF 4" SPRINKLER PIPING AND REINSTALL TO ALLOW FOR NEW 4"GCHWS/R. THIS WILL REQUIRE DRAINING OF SPRINKLER LINE.
4. ROUTE NEW 4" GCHWS/R IN CEILING SPACE.
5. INSTALL NEW EXHAUST DUCT FROM 1ST FLOOR UP INTO 2ND FLOOR CEILING. ROUTE WILL REQUIRE RELOCATION OF R/A REGISTER, S/A DIFFUSER AND SPRINKLER HEAD.
6. REMOVE EXISTING R/A GRILLE AND INSTALL (2) 1'X2' R/A GRILLES AND RELOCATE S/A DIFFUSER. BALANCE CFM'S TO EXISTING.
7. INSTALL GWB WALL ENCLOSURE AROUND NEW DUCT PENETRATION, W/ METAL STUDS, TAPED AND PAINTED. REPLACE AND RESTORE ANY DAMAGED CEILING.

ADD ALTERNATE PRICING:

CONTRACTOR TO PROVIDE AN ADD ALTERNATE PRICING TO REMOVE EXISTING 5"CHWS/R RISERS IN CHASE AND INSTALL NEW 5" SET OF CHWS/R RISERS AND PIPE INSULATION. PROVIDE PRICING TO REMOVE PORTION OF CHASE WALL AND PATCH AND PAINT TO ALLOW FOR INSTALLATION OF 5" PIPES.

ISSUED FOR BID
APRIL 15, 2010

STATE OF VERMONT
WILLIAM R. HALLAM
No. 5
CIVIL
4/15/10

BURLINGTON INTERNATIONAL AIRPORT

SOUTH BURLINGTON VERMONT

| No. | DATE | REVISION |
|---|---|---|


Hallam ICS
38 Eastwood Dr., Suite 200
So. Burlington, VT 05403
Tel: 802.658.4891 Fax: 802.658.1457


BURLINGTON INTERNATIONAL AIRPORT
CHILLER UPGRADE
SO. BURLINGTON VERMONT

SECOND FLOOR
MECHANICAL PLAN

| DRAWN | PROJ.No. |
|---|---|
| JAL | 15649.002 |
| CHECKED | DATE |
| RLM | 04/15/10 |

M-102

G:\DRAWINGS\15649.002 Chiller Upgrade\M-102.dwg Wednesday, November 17, 2010 12:47:46 PM rlm

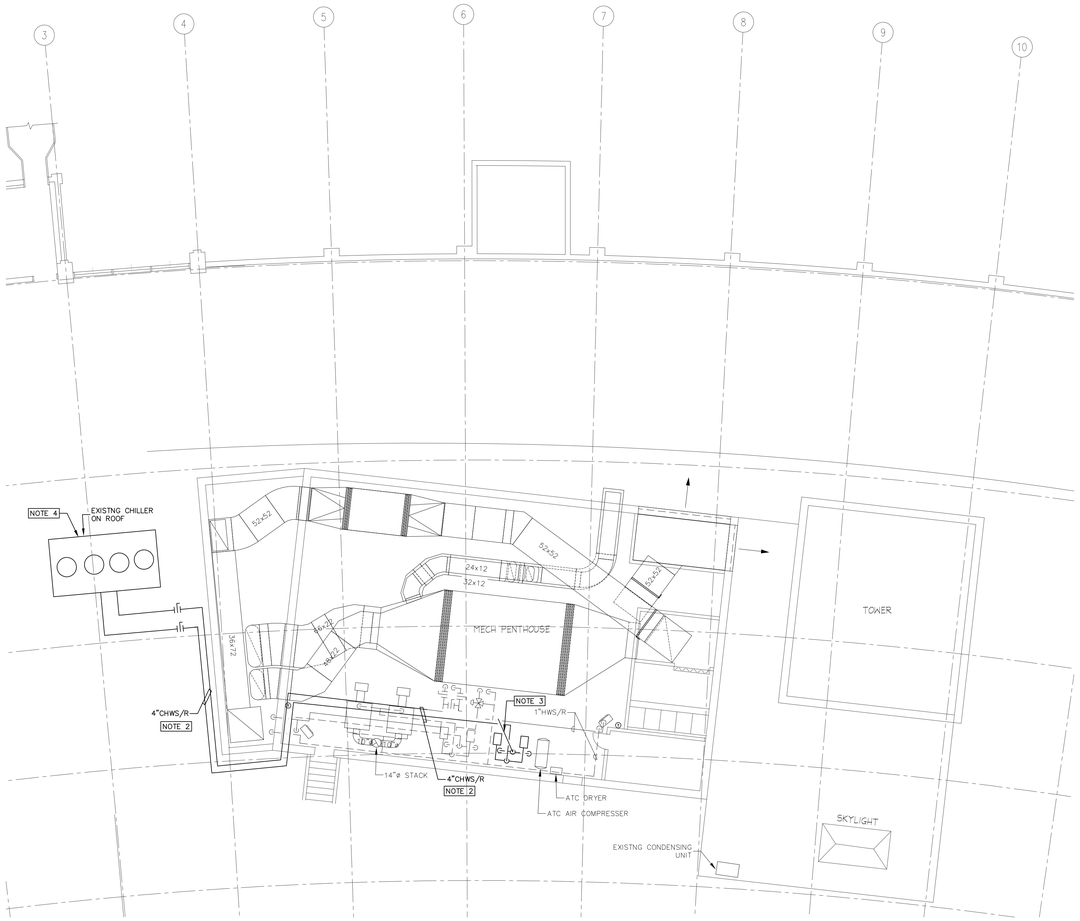


## PENTHOUSE - MECHANICAL PLAN- DEMOLITION

SCALE: 1/8"=1'-0"

DEMOLITION NOTES:

1. NOTE: DEMOLTION WORK OF EXISTING CHWS/R PIPING IS TO BE DONE AFTER NEW CHILLER AND NEW CHILLED WATER PIPING IS INSTALLED.
2. REMOVE EXISTING 4" CHILLED WATER PIPING SERVING EXISTING AHU COOLING COIL. REUSE EXISTING COIL CONNECTION TO NEW 4" GCHWS/R BEING IINSTALLED.
3. REMOVE EXISTING BASE MOUNTED CHILLED WATER PUMPS AND PIPING AFTER NEW CHILLED WATER PIPING HAS BEEN INSTALLED.
4. REMOVE EXISTING CHILLER AND PIPING ON ROOF. PATCH ROOF AS REQUIRED. STRUCTURAL FRAME TO REMAIN.

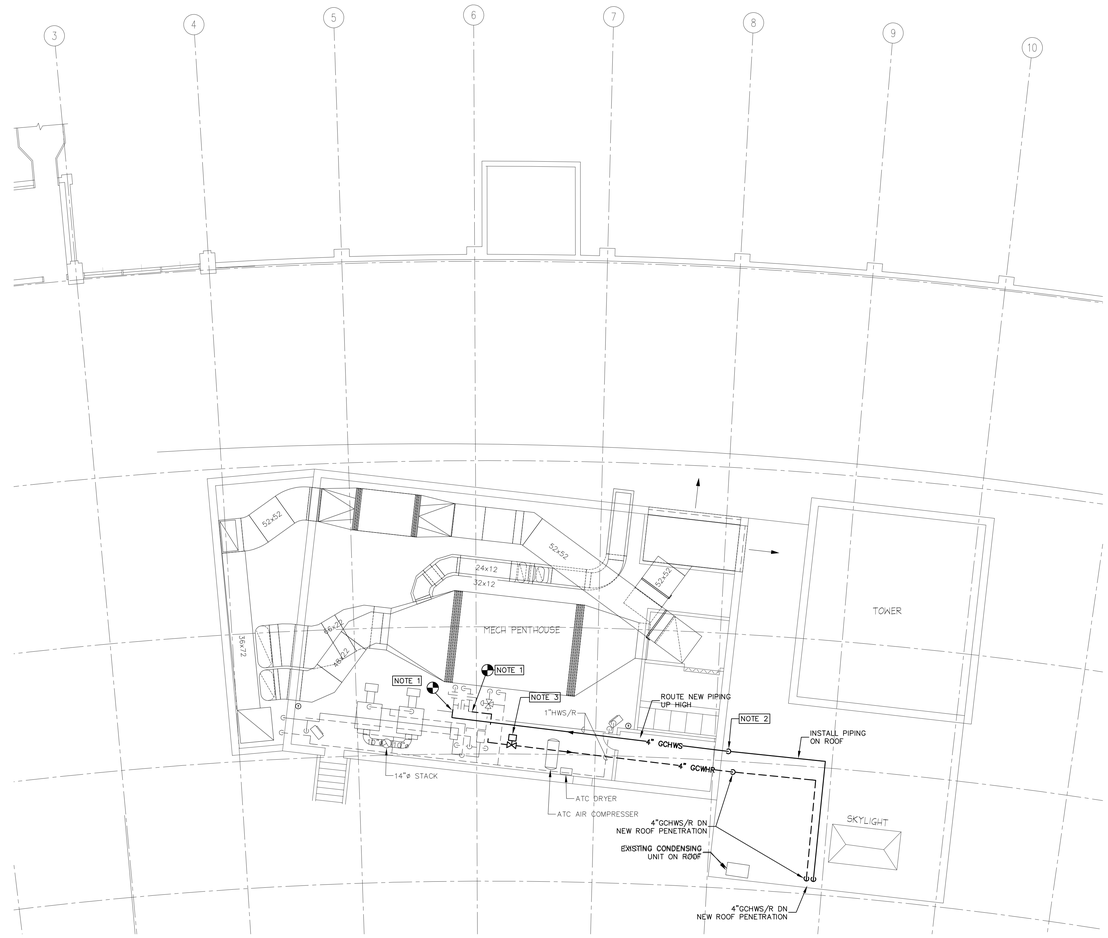


## ROOF LEVEL - MECHANICAL PLAN- PROPOSED

SCALE: 1/8"=1'-0"

PROPOSED NOTES:

1. CONNECT TO EXISTING CHWS/R PIPING W/ 2-WAY CONTROL VALVE SERVING EXISTING COOLING COIL AT THIS LOCATION. MANUAL BYPASS VALVE ON COIL TO BE IN CLOSED POSTION.
2. PENETRATE EXISTING PENTHOUSE WALL AND ROUTE NEW PIPING TO COOLING COIL. ROUTE PIPING UP HIGH.
3. REFER TO EXISTING CHILLED WATER DETAIL DWG. M600.

ISSUED FOR BID
APRIL 15, 2010

G:\DRAWINGS\15649.002 Chiller Upgrade\M-103.dwg Wednesday, November 17, 2010 12:47:36 PM rlm

STATE OF VERMONT
WILLIAM L. KEE
NO. 5
SEAL
4/15/10

**BURLINGTON INTERNATIONAL AIRPORT**

SOUTH BURLINGTON
VERMONT

| No. | DATE | REVISION |
|---|---|---|
| | | |


Hallam ICS
38 Eastwood Dr., Suite 200
So. Burlington, VT 05403
Tel: 802.658.4891 Fax: 802.658.1457


BURLINGTON INTERNATIONAL AIRPORT
CHILLER UPGRADE
SO. BURLINGTON VERMONT

PENTHOUSE/ROOF
DEMOLITION/PROPOSED
MECHANICAL PLAN

| DRAWN | PROJ.No. |
|---|---|
| JAL | 15649.002 |
| CHECKED | DATE |
| RLM | 04/15/10 |

M-103

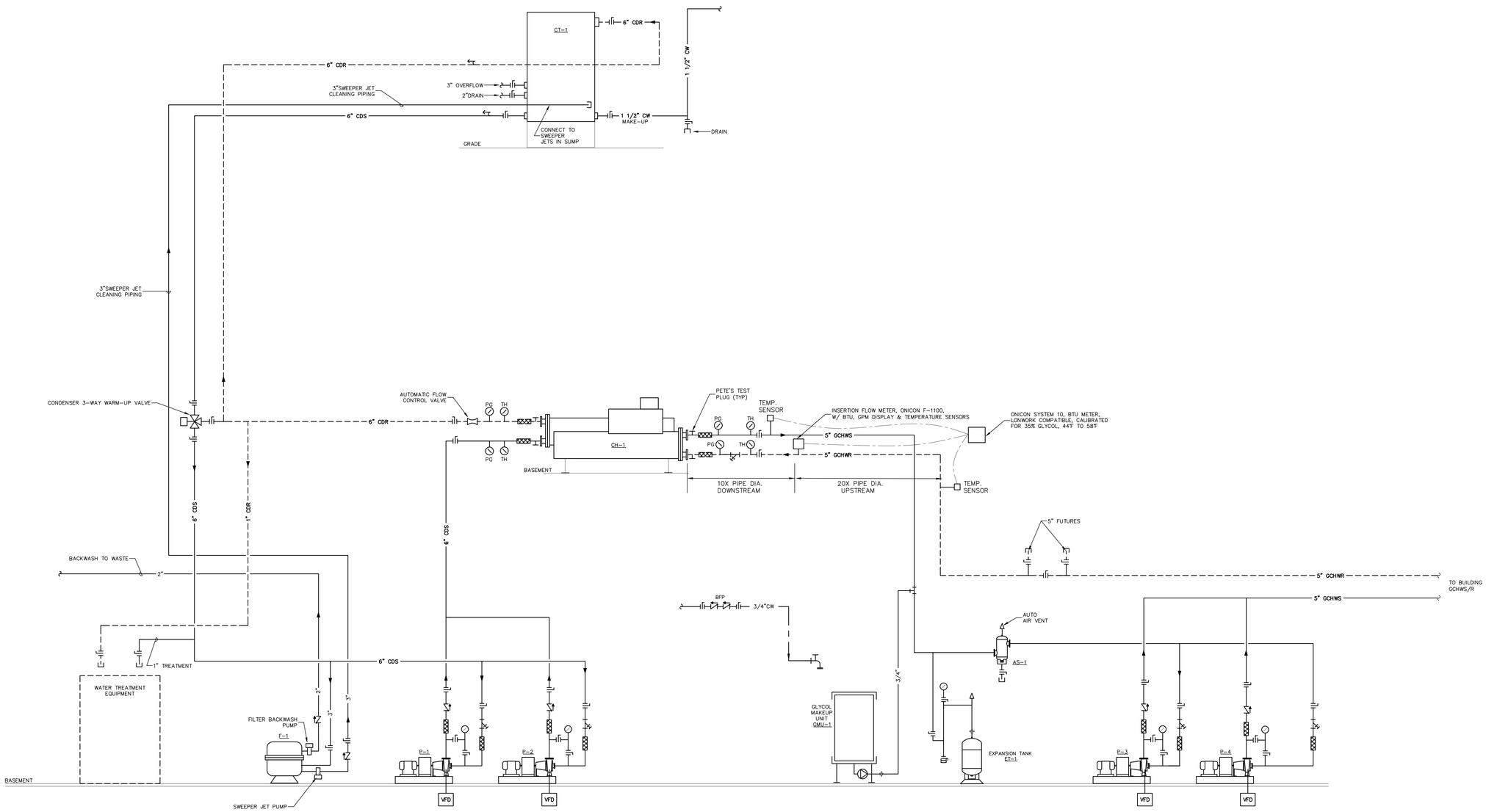


CHILLED WATER AND CONDENSER WATER PIPING SCHEMATIC

SCALE: NONE

ISSUED FOR BID
APRIL 15, 2010

G:\DRAWINGS\15649.002 Chiller Upgrade\M-400.dwg Wednesday, November 17, 2010 12:47:16 PM rlm

STATE OF VERMONT
WILLIAM L. PEARSON
No. 9711
LICENSED PROFESSIONAL ENGINEER
4/15/10

**BURLINGTON INTERNATIONAL AIRPORT**

SOUTH BURLINGTON
VERMONT

| No. | DATE | REVISION |
|---|---|---|
| | | |


HallamICS
38 Eastwood Dr., Suite 200
So. Burlington, VT 05403
Tel: 802.658.4891 Fax: 802.658.1457


BURLINGTON INTERNATIONAL AIRPORT
CHILLER UPGRADE
SO. BURLINGTON VERMONT

MECHANICAL SCHEMATIC

| DRAWN | PROJ.No. |
|---|---|
| JAL | 15649.002 |
| CHECKED | DATE |
| RLM | 04/15/10 |

M-400

## WATER COOLED FRICTIONLESS OIL FREE CENTRIFUGAL CHILLER SCHEDULE

| UNIT NUMBER | LOCATION | DESIGN BASIS | TYPE COMPRESSORS | NOMINAL TONS (NOTE 1) | EVAPORATOR | | | | CONDENSER | | | | EFFICIENCY KW/TON | | | | | ELECTRICAL | | | | REMARKS |
|---|---|---|---|---|---|---|---|---|---|---|---|---|---|---|---|---|---|---|---|---|---|---|
| | | | | | EWT (°F) | LWT (°F) | FLOW (GPM MIN/MAX) | P.D. (FT) | EWT (°F) | LWT (°F) | FLOW GPM (MIN MAX) | P.D. (FT) | FULL LOAD | ARI NPLV | 75% LOAD | 50% LOAD | 25% LOAD | INPUT (KW) | VOLT | PH | HZ | |
| CH-1 | BASEMENT CHILLER MECH ROOM | MCQUAY WMC250DSC15R | (2) CENTRIFUGAL W/VFD'S | 220 | 58 | 44 | 300 TO 405 | 28.8 | 80 | 90 | 525 TO 660 | 7.1 | 0.61 | 0.370 | 0.453 | 0.331 | 0.301 | 134.0 | 480 | 3 | 60 | R134A, VFD'S UNIT MOUNTED, SINGLE POINT ELECTRICAL CONNECTION W/NON-FUSED DISCONNECT, 35% PROPYLENE GLYCOL |

NOTES:
1. NOMINAL TONS IS FOR REFERENCE ONLY. CHILLER MUST BE SIZED TO MEET FLOW AND TEMPERATURE CONDITIONS.
2. CHILLER TO BE FACTORY INSULATED, 1" INSULATION ON COLD SURFACES, LONWORKS BAS INTERFACE MODULE, PIPE UP WATER BOXES W/TWO ELBOWS FOR EASIER TUBE CLEANING.
3. MOUNT ON VIBRATION ISOLATION PADS, ANCHORED INTO SLAB, PROVIDE FACTORY START-UP, 1 YR WARRANTY.
4. CHILLER MUST FIT INTO EXISTING AREAWAY, 11'10" X 5'10". DISASSEMBLE WATER BOXES, AS NEEDED.

## COOLING TOWER SCHEDULE

| UNIT NUMBER | LOCATION | DESIGN BASIS | FAN TYPE | AMBIENT Wb (°F) | COOLING | | | | ELECTRICAL | | | | | REMARKS |
|---|---|---|---|---|---|---|---|---|---|---|---|---|---|---|
| | | | | | FLOW (GPM) | EWT (°F) | LWT (°F) | P.D. (FT) | NO. OF MOTORS | SIZE (HP) | VOLT | PH | HZ | |
| CT-1 | GROUND LEVEL – ON STRUCTURAL STAND | BALTIMORE AIRCOIL 15296KM | AXIAL FAN (2) | 72 | 660 | 90 | 80 | | 2 | 5 | 480 | 3 | 60 | W/VFD'S (2) BY ELECT CONTR., PREMIUM EFF. MOTORS, CROSSFLOW TOWER, VERTICAL DISCHARGE, |

NOTES:
1. MOTOR SIZE INDICATED AS A MAXIMUM VALUE AND CANNOT BE INCREASED TO MEET CAPACITY.
2. VFD MOTOR CONTROL FOR PART LOAD CAPACITY.
3. WITH COLD WATER MAKE UP FLOAT VALVE, 12 KW, 480V 3 PH, SUMP WATER HEATER WITH THERMOSTAT SET AT 40 DEGREES F, CONTROL PANEL, CONTACTOR. HEATER TO BE OFF WHEN SPRAY WATER CIRCULATION PUMP IS ON.
4. COLD WATER BASIN PROTECTED WITH "TRIARMER" CORROSION PROTECTION AND WITH BASIN SWEEPER PIPING WITH NOZZLES.
5. FANS TO BE "WHISPER QUIET" OPTION.

## PUMP SCHEDULE

| PUMP NUMBER | LOCATION | SYSTEM | DESIGN BASIS | CIRCULATING FLUID | | | | TYPE | MOTOR | | | REMARKS |
|---|---|---|---|---|---|---|---|---|---|---|---|---|
| | | | | FLUID | GPM | PUMP HEAD FT. FLUID | TEMP °F | | NOM. HP | ELECTRICAL | RPM | |
| P-1 | CHILLER MECH ROOM | CONDENSER WATER | B&G 1510 5G | WATER | 660 | 50 | 80 | END SUCTION | 15 | 480/3/60 | 1750 | W/VFD |
| P-2 | CHILLER MECH ROOM | CONDENSER WATER | B&G 1510 5G | WATER | 660 | 50 | 80 | END SUCTION | 15 | 480/3/60 | 1750 | W/VFD |
| P-3 | CHILLER MECH ROOM | CHILLED GLYCOL WATER PRIMARY | B&G 1510 4E | 35% PROP. GYLCOL WATER | 405 | 92 | 44 | END SUCTION | 20 | 480/3/60 | 1750 | W/VFD |
| P-4 | CHILLER MECH ROOM | CHILLED GLYCOL WATER PRIMARY | B&G 1510 4E | 35% PROP. GYLCOL WATER | 405 | 92 | 44 | END SUCTION | 20 | 480/3/60 | 1750 | W/VFD |

## DIFFUSER, REGISTER AND GRILLE SCHEDULE

| PLAN SYMBOL | DESCRIPTION | DESIGN BASIS | NECK SIZE | CFM RANGE | ACCESSORIES | REMARKS |
|---|---|---|---|---|---|---|
| ER-1 | SIDEWALL E/A REGISTER SIDEWALL S/A DIFFUSER (DOUBLE DEF TYPE) | METAL AIRE MODEL V4004D | 6x6 | 0-100 | OBD | |
| | SIDEWALL R/A OR E/A REGISTER SIDEWALL S/A DIFFUSER (DOUBLE DEF TYPE) | METAL AIRE MODEL V4004D | 12x6 | 101-250 | OBD | |
| | SIDEWALL R/A OR E/A REGISTER SIDEWALL S/A DIFFUSER (DOUBLE DEF TYPE) | METAL AIRE MODEL V4004D | 16x8 | 251-450 | OBD | |
| | SIDEWALL R/A OR E/A REGISTER SIDEWALL S/A DIFFUSER (DOUBLE DEF TYPE) | METAL AIRE MODEL V4004D | 20X12 | 451-700 | OBD | |
| | SIDEWALL R/A OR E/A REGISTER SIDEWALL S/A DIFFUSER (DOUBLE DEF TYPE) | METAL AIRE MODEL V4004D | 24X12 | 701-1000 | OBD | |
| | | | | | | |

## EXHAUST FAN SCHEDULE

| FAN NO. | LOCATION | SERVES | DESIGN BASIS | TYPE | FLOW (CFM) | TSP (IN) | FRPM | BHP | MAX (dBA) | MOTOR | | | REMARKS |
|---|---|---|---|---|---|---|---|---|---|---|---|---|---|
| | | | | | | | | | | HP | VOLTS | PH | |
| EF-1 | SOUTH TERMINAL ROOF | SUMMER VENTILATION & EMERGENCY REFRIGERANT LEAK DETECTION | GREENHECK CUBE-160-7 | BIAW/CENT. | 2500 | 1.20 | 1308 | 0.85 | 69 | 1 | 208 | 3 | ON EMERGENCY POWER W/MOD, ROOF CURB. |
| SF-1 | CHILLER MECH ROOM | SUMMER VENTILATION & EMERGENCY REFRIGERANT LEAK DETECTION | GREENHECK BSQ-160-7 | BIAW/CENT. | 2500 | 0.60 | 1118 | 0.54 | 63 | 3/4 | 208 | 3 | ON EMERGENCY POWER W/MOD |

NOTES:
1. AIR FLOW QUANTITIES ARE NOMINAL AND INCLUDE AN ALLOWANCE FOR LEAKAGE. FINAL BALANCING MUST BE BASED ON ACTUAL AIR FLOWS.
2. RPM AND BHP MAY VARY BY NO MORE THAN 10% FROM INDICATED VALUE.

## EQUIPMENT SCHEDULE

| PLAN SYMBOL | DESCRIPTION | DESIGN BASIS | CHARACTERISTICS | ELECTRIC | NOTES |
|---|---|---|---|---|---|
| F-1 | PACKAGED, SKID MOUNTED, SIDE-STREAM CONDENSER WATER FILTER | PEP FILTERS #SMF 2-20- FG | BACKWASH/FILTRATION PUMP-43 GPM@ 50 ft. hd., 1 HP, SWEEPER JET PUMP-100 GPM@ 70 ft. hd., 3 HP, 20" DIAMETER "SAND FILTER", 10 MICRONS, FIBERGLASS, | 480V-3PH-60HZ | W/CONTROL PANAL, CONTROLS, ON/OFF/AUTO, TIME CLOCK AND PRESSURE DIFF., INLET BASKET STAINER |
| ET-1 | CHILLED WATER EXPANSION TANK | B&G MODEL D-60 | TANK VOL. 33.6 GAL AN 11.3 GAL ACCEPTANCE | | 19 PSIG PRE-CHRAGE |
| AS-1 | CHILLED WATER SYSTEM | ROLAIRTROL MODEL R-5 | 5" CONNECTION W/ STRAINER | | |
| GMU-1 | GLYCOL MAKE-UP UNIT | WESSELS #GMP 13050 | MAKE-UP CAPACITY OF 1.8 GPM AT 85 PSIG, 50 GALLON CAP. RESEVOIR, PACKAGED WITH PUMP, PRESSURE TANK, VALVES & CONTROLS | 1/3HP-115V/1ø | 19 PSIG PRE-SET AT INTERNAL PRESSURE REDUCING VALVE, PROVIDE "DOWFROST" FOR 35% PROP. GLYCOL MIXTURE |
| | | | | | |

## LOUVER SCHEDULE

| TAG NUMBER | LOCATION | DESIGN BASIS | NOMINAL SIZE | MINIMUM NET FREE AREA REQ'D | MAXIMUM PD (IN) | CFM | SERVICE | REMARKS |
|---|---|---|---|---|---|---|---|---|
| L-1 | MAITENANCE OFFICE | GREENHECK ESJ-401 | 96"Wx18"H | 6.0 | 0.05 | 2500 | INTAKE | NOTE 1 |

NOTES:
1. WITH BIRDSCREEN & BAKED ENAMEL FINISH, COLOR TO BE SELECTED BY ENGINEER.

## UNIT HEATER SCHEDULE

| ITEM NUMBER | TYPE | HEATING (MBH) | WATER (GPM) | ELECTRICAL | | | REMARKS |
|---|---|---|---|---|---|---|---|
| | | | | HP | VOLTS | PH | |
| UH-1 | MODINE MODEL HSB-258 | 201.9 | 9 | 1/2 | 115 | 1ø | HORIZONTAL UNIT HEATER |

ISSUED FOR BID
APRIL 15, 2010

STATE OF VERMONT
WILLIAM R. MCCLURE
NO. 5000
4/15/10

BURLINGTON INTERNATIONAL AIRPORT
SOUTH BURLINGTON VERMONT

| No. | DATE | REVISION |
|---|---|---|
| | | |

HallamICS
38 Eastwood Dr., Suite 200
So. Burlington, VT 05403
Tel: 802.658.4891 Fax: 802.658.1457

BURLINGTON INTERNATIONAL AIRPORT
CHILLER UPGRADE
SO. BURLINGTON VERMONT

MECHANICAL SCHEDULES

| DRAWN | PROJ.No. |
|---|---|
| JAL | 15649.002 |
| CHECKED | DATE |
| RLM | 04/15/10 |

M-500

G:\DRAWINGS\15649.002 Chiller Upgrade\M-500.dwg Wednesday, November 17, 2010 12:47:05 PM rlm

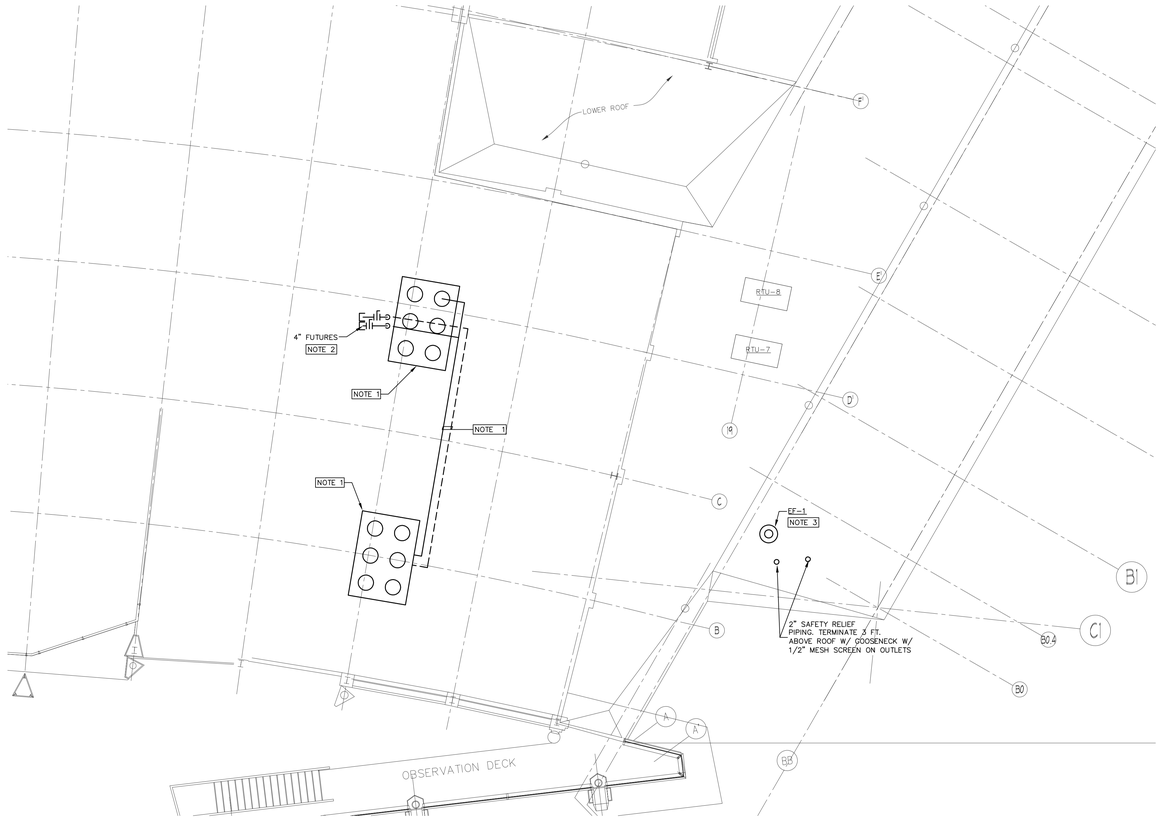


## PARTIAL ROOF PLAN- DEMOLTION/PROPOSED

SCALE: 1/8"=1'-0"

NOTES:

1. REMOVE EXISTING CHILLERS AND PIPING ON ROOF.
2. INSTALL NEW SET OF 4"GCHWS/R FUTURES OFF EXISTNG 5" GCHWS/R RISERS FOR FUTURE AHU.
3. INSTALL NEW EF-1 ON ROOF. FAN TO INSTALLED A MINIMUM OF 20 FT. FROM EXISTING ROOFTOP AHU INTAKES.

ADD ALTERNATE PRICING:

CONTRACTOR TO PROVIDE AN ADD ALTERNATE PRICING TO REMOVE EXISTING 5"CHWS/R RISERS AND PIPE INSUALTION IN CHASE AND INSTALL NEW 5" SET OF CHWS/R RISERS.

ISSUED FOR BID
APRIL 15, 2010

G:\DRAWINGS\15649.002 Chiller Upgrade\M-104.dwg Wednesday, November 17, 2010 12:47:25 PM rlm

STATE OF VERMONT
WILLIAM
R. LAMB
CIVIL
4/15/10

**BURLINGTON INTERNATIONAL AIRPORT**

SOUTH BURLINGTON
VERMONT

| No. | DATE | REVISION |
|---|---|---|


Hallam ICS
38 Eastwood Dr., Suite 200
So. Burlington, VT 05403
Tel: 802.658.4891 Fax: 802.658.1457


BURLINGTON INTERNATIONAL AIRPORT
CHILLER UPGRADE
SO. BURLINGTON VERMONT

ROOF DEMOLTION/PROPOSED
MECHANICAL PLAN

| DRAWN | PROJ.No. |
|---|---|
| JAL | 15649.002 |
| CHECKED | DATE |
| RLM | 04/15/10 |

M-104

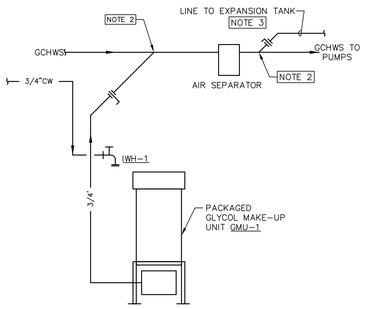


## GLYCOL MAKE-UP PACKAGE DETAIL

SCALE: NONE

NOTES:

1. REFER TO PIPING SCHEMATIC FOR DRAIN PIPING REQUIREMENTS TO GMU-1 RESERVOIR.
2. PROVIDE SIDE CONNECTION OFF MAIN WITHIN 3' OF AIR SEPARATOR.
3. PROVIDE EXPANSION TANK LINE WHEN EXPANSION TANK IS NOT SHOWN CONNECTED TO AIR SEPARATOR ON PIPING SCHEMATIC.

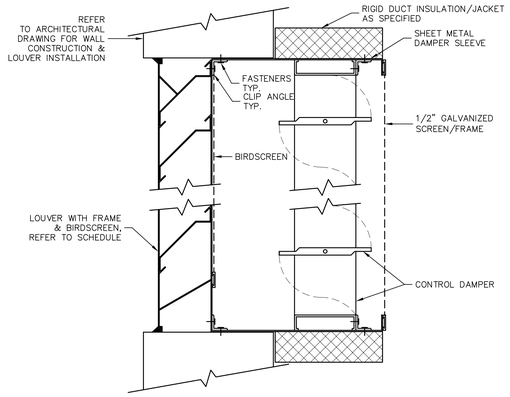


## WALL LOUVER/CONTROL DAMPER DETAIL

SCALE: NONE

NOTES:

1. PROVIDE STANDOFF FOR DAMPER ACTUATOR MOUNTING TO PERMIT CONTINUOUS INSULATION OF DAMPER SLEEVE.

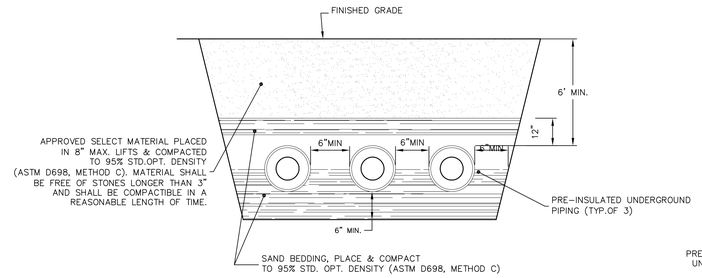


## UNDERGROUND WATER PIPING INSTALLATION DETAIL

SCALE: NONE

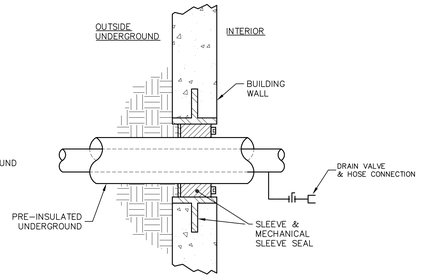


## UNDERGROUND WATER PIPING WALL ENTRY DETAIL

SCALE: NONE

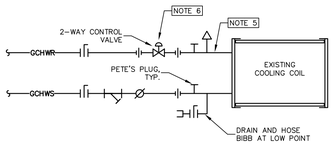


## EXISTING CHILLED WATER COIL DETAIL -TYP of 2

SCALE: NONE

NOTES:

1. SUPPORT PIPING INDEPENDENT OF COILS.
2. INSTALL PIPING TO NOT INTERFERE WITH COIL REMOVAL, ACCESS DOORS, OR OTHER UNIT MAINTENANCE.
3. WHERE COILS HAVE MULTIPLE SECTIONS BANKED TOGETHER, PROVIDE SHUT-OFF VALVES TO EACH SECTION AND PROVIDE P&T TAPS TO FACILITATE BALANCING.
4. PROVIDE VENTS AND DRAINS ON ALL COIL SECTIONS.
5. CONNECT THE CHILLED PIPING TO THE COIL IN A COUNTERFLOW MANNER.
6. AT PENTHOUSE COOLING COIL – PROVIDE NEW 2-WAY CONTROL VALVE & DISCHARGE AIR TEMP. SENSOR. AT BASEMENT COOLING COIL – REUSE EXISTING 3-WAY CONTROL VALVE & DISCHARGE AIR TEMP. SENSOR.

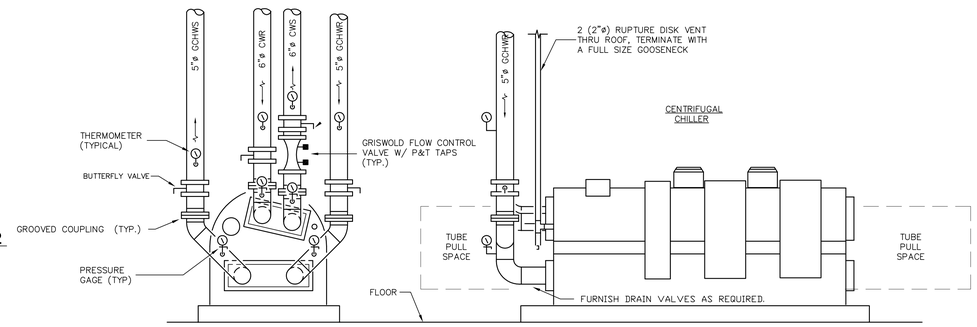


NOTE: 1. ARRANGE ALL PIPING CONNECTIONS FOR TUBE PULL SPACE.

## CHILLER PIPING DETAIL

SCALE: NONE

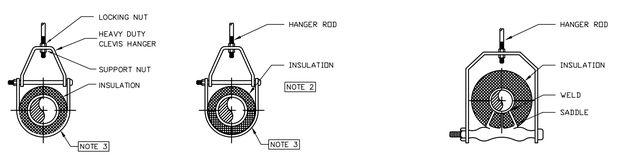


## CLEVIS HANGER

(TYPICAL OF ALL PIPING LESS THAN 4")

## ADJ. CLEVIS HANGER

(TYPICAL COLD WATER PIPING, UP TO 100°F, 4"ø & LARGER)

## ADJ. ROLLER HANGER

(TYPICAL OF PIPING 4" OR LARGER)

## PIPE HANGER DETAILS

SCALE: NONE

NOTES:

1. COORDINATE THESE DETAILS WITH REQUIREMENTS OF SPECIFICATIONS.
2. PROVIDE CALCIUM SILICATE INSULATION INSERT UNDER INSULATION. SHIELD LENGTH: 3x PIPE ø. EXPAND PIPING IMSULATION VAPOR BARRIER.
3. 16 GA. ZINC COATED SHEET STEEL SADDLE AT LEAST 12" LONG W/ BANDS.

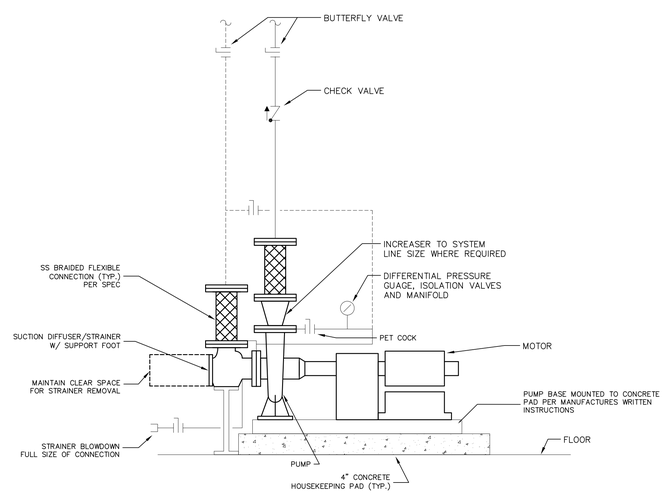


## BASE MOUNTED PUMP DETAIL

SCALE: NONE

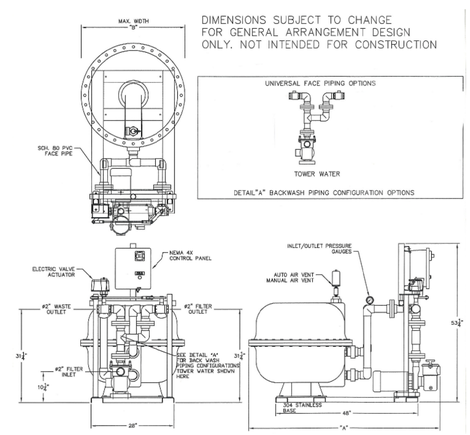


## SIDESTREAM CONDENSER WATER FILTER

SCALE: NONE

ISSUED FOR BID
APRIL 15, 2010

STATE OF VERMONT
WILLIAM R. PEARL
No. 9311
4/15/10

BURLINGTON INTERNATIONAL AIRPORT

SOUTH BURLINGTON VERMONT

| No. | DATE | REVISION |
|---|---|---|
| | | |


HallamICS
38 Eastwood Dr., Suite 200
So. Burlington, VT 05403
Tel: 802.658.4891 Fax: 802.658.1457


BURLINGTON INTERNATIONAL AIRPORT
CHILLER UPGRADE
SO. BURLINGTON VERMONT

MECHANICAL DETAILS

| DRAWN | PROJ.No. |
|---|---|
| JAL | 15649.002 |
| CHECKED | DATE |
| RLM | 04/15/10 |

M-600

G:\DRAWINGS\15649.002 Chiller Upgrade\M-600.dwg Wednesday, November 17, 2010 12:46:53 PM rlm

## CONTROL LEGEND

| | |
|---|---|
| T | TEMPERATURE SENSOR |
| T | TEMPERATURE SWITCH |
| T | THERMOMETER |
| P | PRESSURE SENSOR |
| P | PRESSURE SWITCH |
| DP | DIFFERENTIAL PRESSURE SENSOR |
| | VALVE W/ACTUATOR (2-WAY) |
| | VALVE W/ACTUATOR (3-WAY) |
| F | FLOW SENSOR |
| F | FLOW SWITCH |
| H | HUMIDITY SENSOR |
| H | HUMIDITY SWITCH |
| AO | CONTROL SIGNAL TO DEVICE |
| AI | ANALOG CONTROL SIGNAL FROM DEVICE |
| DO | DIGITAL CONTROL SIGNAL TO DEVICE |
| DI | DIGITAL CONTROL SIGNAL FROM DEVICE |
| NC | NORMALLY CLOSED |
| NO | NORMALLY OPEN |
| M / VFD | INPUT/OUTPUT SIGNALS AS REQUIRED AND NOTED BY CONTROLS CONTRACTOR |
| AI | ANALOG SIGNAL FROM DEVICE |
| AO | ANALOG SIGNAL TO DEVICE |
| DI | DIGITAL SIGNAL FROM DEVICE |
| DO | DIGITAL SIGNAL TO DEVICE |

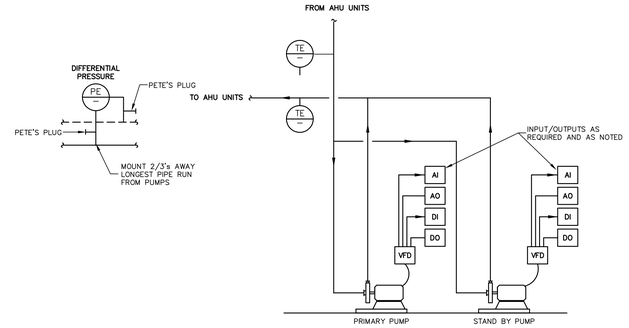


## TYPICAL CHILLED WATER & CONDENSER WATER SYSTEM PUMP OPERATIONS

1. System shall maintain flow based on differential pressure (adjustable) between supply and return header loop piping individual zone control shall be controlled through the building terminal equipment as noted. ddc system shall provide pump start stop capability, pump alarm, temperature and pressure monitoring conditions run status as well as trend systems temperature and pressure conditions. the differential pressure setpoint will be determined based upon results of balancing system. expected to be approx. 25 ft. of head water gauge. Provide a chilled water differential pressure reset strategy (chilled water valve position, as an example) to reduce the pressure the pump the has to work against.
2. "Lead" pump operation shall be automatically alternated every four weeks during cooling mode operation. upon a failure of the "lead" pump (via pump vfd status) or a loss of flow as seen by the differential pressure transmitter the "lead" pump shall shutdown and the "lag" pump shall automatically start. a "pump-2 failure alarm" shall be annunciated at the bms and the local panel alarm light shall illuminate. to restore normal pump operation, the alarm must be manually reset at the control panel or via the bms.
3. DDC system to allow running the condenser water and chilled water pumps for several minutes after the chiller is commanded to shutdown to allow the chiller to go through a pump down per manufacturers recommendation.

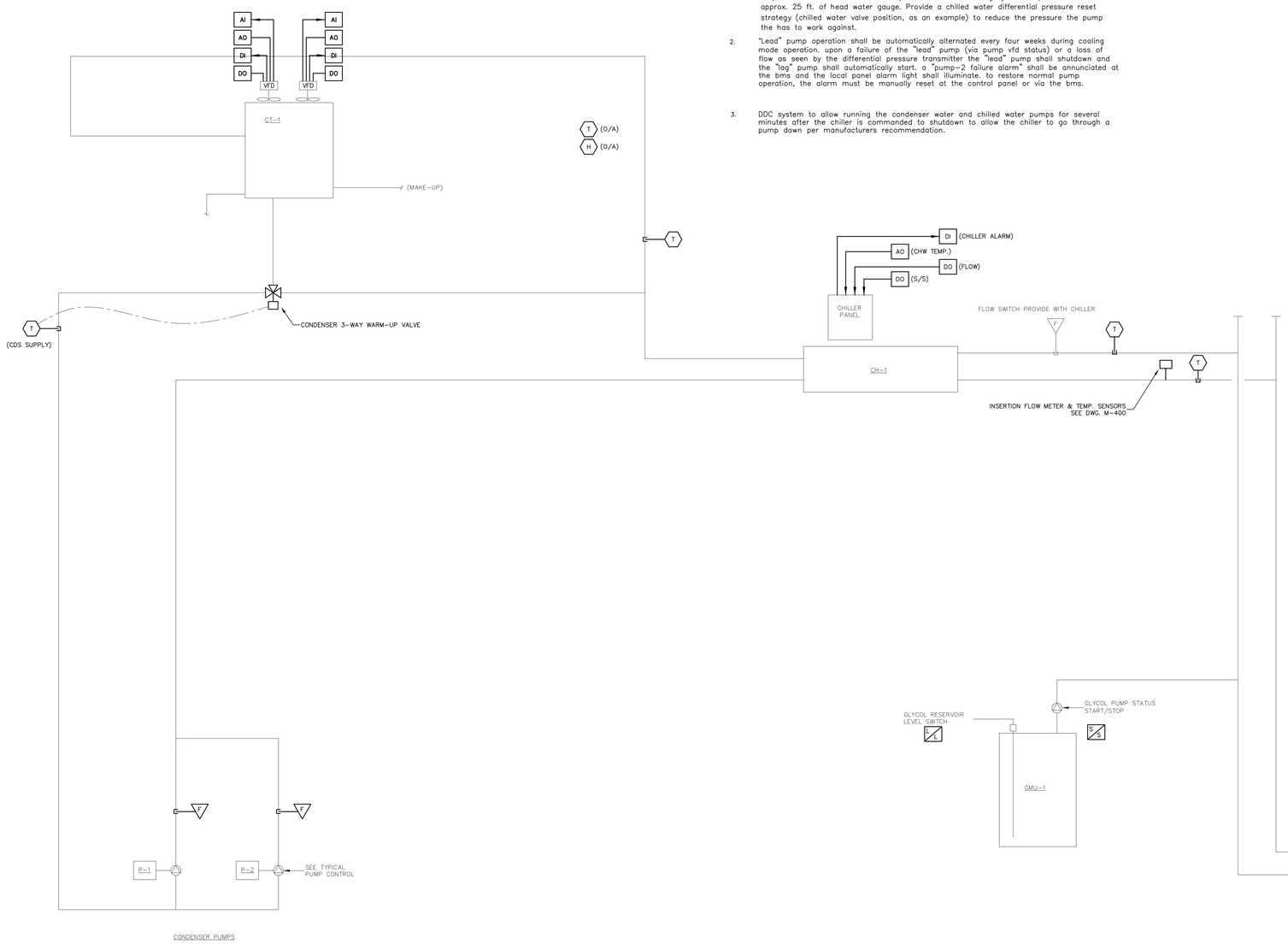


## CHILLED WATER SYSTEM CONTROL SCHEMATIC

SCALE: NONE

## Chilled Water System Sequence

General

1. The chiller package will be equipped with internal controls. The DDC controls will interface with these controls. Provide a DDC panel to control and monitor the chilled water system.

Start-up

1. System shall be started by manually initiating power to circulating pumps through h-o-a switch on motor starter or variable speed drive. Chiller shall be interlocked to run only when pumps are in operation. Starting of chilled water system shall also start the condenser water system.

Chiller Control

1. The chiller will be equipped with internal controls but will require a signal from the DDC system on which to base its operation. Fully coordinate with the chiller internal controls and provide a control signal to the chiller based on chilled water supply temperature. Chilled water supply temperature set point shall be 44°F. Provide a chilled water reset based upon indoor and outdoor temperatures and humidities.
2. Start chiller after pumps flows are proven for 1 minute minimum.
3. Chiller capacity is controlled through the internal controls of the chiller.

Start up,
The Chilled Water system shall be commanded to start from the Building Management System based on building occupancy, indoor and outrdoor temperatures. Provide a programmed time clock schedule to indicated occupied and unoccupied periods for the building. With outdoor air temperatures above 60°F and central air handler calls for chilled water to maintain it's discharge air temperature setpoint pumps and then chiller shall start. Pump speed shall be controlled to maintain a programmed differential pressure between the supply and return lines. When flow is proven the chiller shall be enabled to operate from it's own controls. Chiller shall cycle in stage as required to maintain supply water temperature.

4. Provide a user programmable set point at the front end for chilled water system differential pressure and chilled water pump minimum VFD frequency.
5. Low pressure at the return line shall indicate an alarm to the system and start glycol fill pump. Low level in the glycol reservoir shall stop the pump also sound an alarm.
6. Temperature Control:
   The chilled water supply temperature shall be controlled by the chillers factory supplied control panel. Chilled water supply and return water temperatures shall be independtly monitor to the Building Management System and have temperature reset based upon above.
7. Chilled water flow rate change not to exceed 10% per minute (of the difference between the max. and min. chiller water flows).
8. Provide DDC Graphics of chiller/tower cooling plant with pumps/piping for approval.

Alarm Points;

Condenser Water pumps Fail
Chilled Water pumps Fail
System Pressure Low
Glycol pump Fail
Glycol Reservoir Low
System Diff. Pressure High
System Diff. Pressure Low
Chilled Water Temperature High
Chiller in Alarm

Cooling Tower Control

1. The cooling tower shall be interlocked with the condenser water pumps and the system shall start when the chilled water system is started.
2. The leaving condenser water temperature shall be maintained by modulating fan speed through the (2) VFD's. Leaving condenser water temperature setpoint shall be 82°F. Provide a condenser water temperature reset to acheive the expected chiller perfomance for 75% load, 75°F, 50% load, 65°F and 25% load, 65°F.
3. Setting of low limit shall be 65°F but final setpoint shall be confirmed with chiller manufacturer to correspond with the lowest safe operation temperature of the chiller. Provide 3-way condenser water warm-up valve and control, for cold weather start-up.

"Miscellaneous Control Sequences"

1. The chiller room within the basement will have an exhaust fan & supply fan to provide general ventilation and emergency ventilation in the event of refrigerent leak. Provide a thermostat to operate these fans when room temperature is above 80°F. Interlock outside air and exhaust air dampers. Connect thermostat to the new &
2. existing unit heaters, with deadband. If refrigerant leaks – fans to run, anytime.

DDC system should inidcate power consumption for pumps, chiller and cooling tower fans KW values from the VFD's and from plant performance monitoring. This also includes the new chiller flow btu meter and chiller true RMS KW.

CONTROLS TO BE PROVIDED BY CONTROLS TECHNOLOGIES, HIRED BY THE AIRPORT. MECHANICAL CONTRACTOR TO COORDINATE ALL WORK WITH CONTROL TECHNOLOGIES. CONTACT MIKE CARR AT 764-2236.

ISSUED FOR BID
APRIL 15, 2010

STATE OF VERMONT WILLIAM R. MOSER 4/15/10

BURLINGTON INTERNATIONAL AIRPORT

SOUTH BURLINGTON VERMONT

| No. | DATE | REVISION |
|---|---|---|


Hallam ICS
38 Eastwood Dr., Suite 200
So. Burlington, VT 05403
Tel: 802.658.4891 Fax: 802.658.1457


BURLINGTON INTERNATIONAL AIRPORT
CHILLER UPGRADE
SO. BURLINGTON VERMONT

MECHANICAL CONTROLS

| | |
|---|---|
| DRAWN JAL | PROJ.No. 15649.002 |
| CHECKED RLM | DATE 04/15/10 |

M-700

G:\DRAWINGS\15649.002 Chiller Upgrade\M-700.dwg Wednesday, November 17, 2010 12:46:44 PM rlm

# ELECTRICAL LEGEND

- EXIT LIGHT, WALL MOUNTED, LETTER DENOTES TYPE
- EXIT LIGHT, CEILING MOUNTED, LETTER DENOTES TYPE
- JUNCTION BOX, CEILING MOUNTED
- SURFACE FLUORESCENT FIXTURE, CAPITAL LETTER DENOTES FIXTURE TYPE; LOWER CASE LETTERS DENOTE SWITCHING
- WALL MOUNTED SURFACE FLUORESCENT FIXTURE, CAPITAL LETTER DENOTES FIXTURE TYPE; LOWER CASE LETTERS DENOTE SWITCHING
- SURFACE FLUORESCENT FIXTURE W/EMERGENCY BALLAST
- WALL MOUNTED SURFACE FLUORESCENT FIXTURE W/EMERGENCY BALLAST
- STRIP LIGHT FIXTURE
- WALL MOUNTED LIGHT FIXTURE, LETTER DENOTES TYPE, SMALL LETTER DENOTES SWITCH LOOP
- RECESSED,SURFACE OR PENDANT MOUNTED LIGHT FIXTURE, LETTER DENOTES TYPE, SMALL LETTER DENOTES SWITCH LOOP
- CEILING MOUNTED OCCUPANCY SENSOR
- EMERGENCY BATTERY LIGHT
- REMOTE HEAD EMERGENCY LIGHT
- SINGLE POLE LIGHT SWITCH LOWER CASE LETTER DENOTES SWITCHING.
- DOUBLE POLE LIGHT SWITCH SECOND POLE USED FOR FANS
- 3-WAY LIGHT SWITCH
- 4-WAY LIGHT SWITCH
- SWITCH W/ OCCUPANCY SENSOR
- MOTOR SENTINEL SWITCH (NO OVERLOADS)-SUBSRIPT DENOTES NEMA TYPE OF ENCLOSURE, WP=NEMA 4X, XP=NEMA 12, ETC.
- MOTOR SENTINEL SWITCH (WITH OVERLOADS)-SUBSRIPT DENOTES NEMA TYPE OF ENCLOSURE, WP=WEATHER PROOF, XP=EXPLOSION PROOF, ETC.
- EMERGENCY BURNER SWITCH
- FAN CONTROL SWITCH
- TIMER SWITCH
- CT — CURRENT TRANSFORMER CABINET.
- CP — CONTROL PANEL
- C — CONTACTOR
- RIO — REMOTE I/O PANEL
- FT — FLOW TRANSMITTER PANEL
- FE — FLOW SENSING ELEMENT
- DOP — DISSOLVED OXYGEN PANEL
- RI — REMOTE INDICATION PANEL
- GMP — GAS MONITORING PANEL
- TELE — TERMINAL BOX FOR TELEPHONE
- CR — CHART RECORDER
- RAP — GENERATOR REMOTE ANNUNICATOR PANEL
- EMS — ENERGY MANAGEMENT SYSTEM CONTROL PANEL
- EPO — EMERGENCY POWER OFF
- PM — POWER MONITOR
- TVSS — TRANSIENT VOLTAGE SURGE SUPPRESSOR PANEL
- PUSH BUTTON STATION
- "X" — PANELBOARD, LETTERING DESIGNATES NAME
- EQUIPMENT CONNECTION (HARD WIRED)
- MOTOR STARTER
- COMBINATION MOTOR STARTER/SAFETY SWITCH
- NON-FUSED DISCONNECT SWITCH
- FUSED DISCONNECT SWITCH
- M — MOTORIZED VALVE (BY MECHANICAL, WIRED BY ELECTRICAL) (NUMBER DENOTES SIZE).
- T — TRANSFORMER
- BRANCH CIRCUIT HOMERUN TO PANELBOARD
- BRANCH CIRCUIT
- OHP — OVERHEAD PRIMARY ELECTRICAL
- UGP — UNDERGROUND PRIMARY ELECTRICAL
- OHE — OVERHEAD SECONDARY ELECTRICAL
- UGE — UNDERGROUND SECONDARY ELECTRICAL
- UGC — UNDERGROUND CONTROL ELECTRICAL
- OT — OVERHEAD TELEPHONE
- UT — UNDERGROUND TELEPHONE
- UTV — UNDERGROUND TELEVISION
- BRANCH CIRCUIT BELOW GRADE OR SLAB
- SURFACE RACEWAY, REFER TO DRAWING FOR DEVICES TO BE INSTALLED
- SPECIAL RECEPTACLE, REFER TO DRAWING FOR NEMA CONFIGURATION.
- LP1-2 — PANEL AND CIRCUIT IDENTIFICATION FOR LIGHTING AND GENERAL POWER
- DUPLEX RECEPTACLE
- QUADRAPLEX RECEPTACLE
- DUPLEX RECEPTACLE, MOUNT ABOVE COUNTER HEIGHT
- SINGLE OUTLET (C DENOTES CLOCK OUTLET)
- IG — DUPLEX OUTLET, ISOLATED GROUND TYPE
- SP — DUPLEX OUTLET, SURGE PROTECTION TYPE
- GFI — DUPLEX OUTLET, GROUND FAULT TYPE
- WP — DUPLEX RECEPTACLE, GROUND FAULT TYPE WITH WEATHERPROOF COVER
- TELEPHONE OUTLET
- W — WALL MOUNTED TELEPHONE OUTLET (MOUNT AT 60" A.F.F.)
- D — DATA OUTLET
- TV — CABLE TV OUTLET
- T — THERMOSTAT
- MOTOR
- FIROMATIC
- ATS — AUTOMATIC TRANSFER SWITCH
- CIRCUIT BREAKER
- CONTACT
- GENERATOR
- MAIN LUG ONLY PANELBOARD
- MAIN CIRCUIT BREAKER PANELBOARD
- SAFETY SWITCH
- GROUND
- M — METER
- TRANSIENT VOLTAGE SURGE PROTECTOR
- COMBINATION STARTER, NON-FUSED, FUSED OR CIRCUIT BREAKER AS INDICATED
- ACROSS LINE STARTER
- SOLID STATE REDUCE VOLTAGE STARTER
- VFD — VARIABLE FREQUENCY DRIVE
- VFD — VARIABLE FREQUENCY DRIVE WITH ENGINEERED ENCLOSURE
- TRANSFORMER
- UNISTRUT RACK FOR ELECTRICAL EQUIPMENT
- S — SOLENOID VALVE
- FT — FLOW TRANSMITTER
- PROXIMITY SWITCH
- LT — LEVEL TRANSMITTER
- CONTROL STATION
- GS — GAS SENSOR
- R — ALARM INDICATOR LIGHT (RED)
- G — ALARM INDICATOR LIGHT (GREEN)
- LIMIT SWITCH
- FS — FLOW SWITCH
- PS — PRESSURE SWITCH
- PT — PRESSURE TRANSMITTER
- LS — LEVEL SWITCH OR LEAK SENSOR
- TS — TEMPERATURE SWITCH
- TQS — TORQUE LIMIT SWITCH
- VS — VIBRATION SWITCH
- SCR — SCR SPEED CONTROLLER
- TEMPERATURE SWITCH (SCHEMATIC)
- FUSE
- C — CONTACTOR COIL
- M — MOTOR STARTER COIL
- OL — MOTOR STARTER OVERLOAD RELAY CONTACTS
- NORMALLY OPEN RELAY CONTACT
- NORMALLY CLOSED RELAY CONTACT
- F — FIRE ALARM PULL STATION
- HL — FIRE ALARM HORN/LIGHT
- S — FIRE ALARM SMOKE DETECTOR, "d" INDICATES DUCT TYPE
- RT — FIRE ALARM DUCT SMOKE DETECTOR REMOTE TEST STATION
- H — FIRE ALARM HEAT DETECTOR, TEMPERATURE RATING INDICATED

# ABBREVIATIONS

| | |
|---|---|
| A | AMPERES |
| AFF | ABOVE FINISHED FLOOR |
| AFG | ABOVE FINISHED GRADE |
| AHU | AIR HANDLING UNIT |
| APPROX | APPROXIMATELY |
| ATC | AUTOMATIC TEMPERATURE |
| ATS | AUTOMATIC TRANSFER SWITCH |
| AUTO | AUTOMATIC |
| C | CONDUIT |
| CB | CIRCUIT BREAKER |
| cd | CANDELA |
| CLG | CEILING |
| COL | COLUMN |
| CP | CONTROL PANEL |
| CT | CURRENT TEMPERATURE |
| CUH | CABINET UNIT HEATER |
| DN | DOWN |
| EF | EXHAUST FAN |
| ELEV | ELEVATION |
| EOL | END OF LINE |
| ERU | ENERGY RECOVERY UNIT |
| EXH | EXHAUST |
| EXIST | EXISTING |
| FA | FIRE ALARM |
| FACP | FIRE ALARM CONTROL PANEL |
| FCU | FAN COIL UNIT |
| FVNR | FULL VOLTAGE NON REVERSING |
| G | GROUND |
| GEN | GENERATOR |
| HOA | HAND-OFF-AUTO |
| JBOX | JUNCTION BOX |
| LC | LIGHTING CONTACTOR |
| LEL | LOWER EXPLOSIVE LIMIT |
| LNP | LOSS OF NORMAL POWER |
| LS | LIMIT SWITCH OR LEVEL SWITCH |
| LSIG | LONG TIME, SHORT TIME, INSTANTANEOUS, GROUND FAULT |
| MCP | MOTOR CIRCUIT PROTECTOR |
| MIN | MINIMUM |
| MLO | MAIN LUG ONLY |
| MOD | MOTOR OPERATED DAMPER |
| NC | NORMALLY CLOSED CONTACT |
| NO | NORMALLY OPEN CONTACT |
| OHD | OVERHEAD DOOR |
| OL | OVERLOAD |
| ø | PHASE |
| P | POLE |
| PE | PRIMARY ELECTRICAL |
| PL | PILOT LIGHT |
| RAF | RETURN AIR FAN |
| RF | RETURN FAN |
| SAF | SUPPLY AIR FAN |
| SCADA | SUPERVISORY CONTROL AND DATA ACQUISITION |
| SE | SECONDARY ELECTRICAL |
| SEC | SECONDARY |
| SW | SWITCH |
| TC | TIME CLOCK |
| TDDE | TIME DELAY DUAL ELEMENT |
| TVSS | TRANSIENT VOLTAGE SURGE SUPPRESSOR |
| TW | TANDEM WIRING |
| TYP | TYPICAL |
| UH | UNIT HEATER |
| V | VOLTS |
| VFD | VARIABLE FREQUENCY DRIVE |
| WP | WEATHERPROOF |
| XFMR | TRANSFORMER |
| XP | EXPLOSION PROOF |

ISSUED FOR BID
APRIL 15, 2010

STATE OF VERMONT
GEORGE A. WISKER
NO. 7083
Electrical
LICENSED
PROFESSIONAL ENGINEER
4/19/10

**BURLINGTON INTERNATIONAL AIRPORT**

SOUTH BURLINGTON
VERMONT

| No. | DATE | REVISION |
|---|---|---|
| | | |


Hallam ICS
38 Eastwood Dr., Suite 200
So. Burlington, VT 05403
Tel: 802.658.4891 Fax: 802.658.1457


BURLINGTON INTERNATIONAL AIRPORT
CHILLER UPGRADE
SO. BURLINGTON VERMONT

ELECTRICAL
LEGEND + SYMBOLS

| DRAWN | PROJ.No. |
|---|---|
| SMK | 15649.002 |
| CHECKED | DATE |
| SMK | 04/15/10 |

E0.00


G:\DRAWINGS\15649.002 Chiller Upgrade\E-000.dwg Wednesday, November 17, 2010 12:48:44 PM rrm

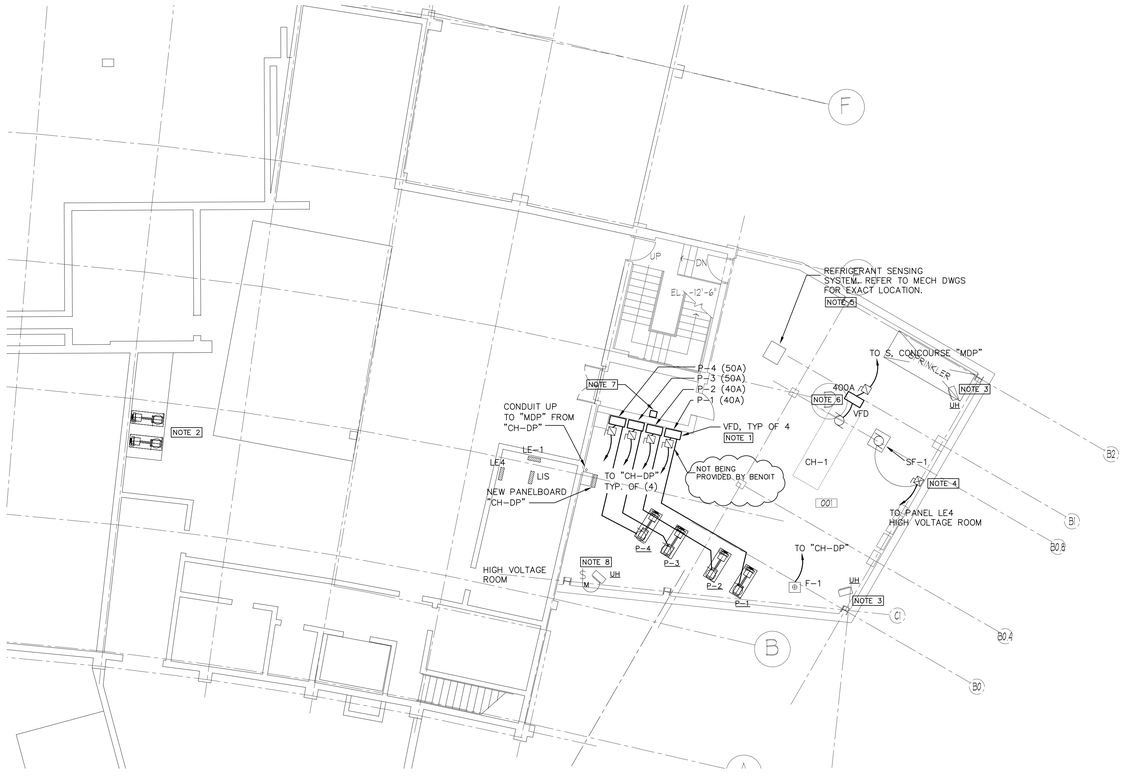


## BASEMENT - ELECTRICAL PLAN

SCALE: 1/8"=1'-0"

CONTRACTOR TO PROVIDE LABOR AND MATERIALS TO PERFORM THE FOLLOWING WORK:

NOTES:

1. FURNISH AND INSTALL NEW VARIABLE FREQUENCY DRIVE (VFD) WITH FUSED DISCONNECT SWITCH. COMMUNICATION CARD SHALL MATCH EXISTING DDC CONTROLS FOR KW AND SPEED MONITORING PRIOR TO ORDERING VFD – TYPICAL ALL VFD'S. REFER TO ONE-LINE DIAGRAM (DWG E-400) AND SPECIFICATIONS FOR ADDITIONAL INFORMATION. COORDINATE EXACT LOCATION IN FIELD SO AS TO MAINTAIN 3 FEET FREE CLEARANCE FROM LIVE PARTS IN FRONT OF EQUIPMENT AND 3'-6" TO GROUNDED PARTS FOR 151VAC – 600VAC TO GROUND PER NEC AND TO AVOID NEW GMU (GLYCOL) TANK.

2. REMOVE EXISTING ELECTRICAL EQUIPMENT, WIRING AND CONDUIT COMPLETE BACK TO SOURCE FOR EXISTING CHWS/R PUMPS AFTER NEW GCHWS/R PIPING HAS BEEN INSTALLED..

3. EXISTING UNIT HEATERS TO REMAIN.

4. FURNISH AND INSTALL NEW COMBINATION STARTER/DISCONNECT SWITCH FOR NEW SUPPLY FAN. MOUNT ON WALL. AVOID EXISTING CONDUITS AND JUNCTION BOXES AS REQUIRED. REFER TO E-400 FOR ADDITIONAL INFORMATION.

5. FURNISH AND INSTALL EMERGENCY 120VOLT POWER (2)#12, (1)#12G, 1/2"C FOR NEW NEW REFRIGERANT LEAK DETECTION SENSOR AND CONTROLS FROM EXISTING EMERGENCY SPARE 20A-1P CIRCUIT BREAKER IN PANEL LE-1 (BASEMENT HIGH VOLTAGE ROOM) AS REQUIRED. REFER TO MECHANICAL DRAWINGS FOR EXACT LOCATION AND ADDITIONAL DETAILS. PROVIDE ALL REQUIRED MATERIAL AND LABOR TO CONNECT INTO REFRIGERANT LEAK SYSTEM INCLUDING ALL REQUIRED WIRING AND CONDUIT. THIS SAME CIRCUIT SHALL BE USED TO PROVIDE POWER TO THE NEW SUPPLY AND EXHAUST FAN MOD'S LOCATED ON THE FIRST FLOOR AND ROOF. PROVIDE MANUAL MOTOR STARTER SWITCH(S) WITH THERMAL OVERLOADS FOR NEW MOD'S. SEE E-101 AND E-102.

6. VFD AND NON-FUSED DISCONNECT FOR CHILLER, FURNISHED BY MECHANICAL, INSTALLED BY ELECTRICAL.

7. TEMPORARILY REMOVE EXISTING LIGHT FIXTURE TO ALLOW FOR CHILLER INSTALLATION. RE-INSTALL AND RELAMP ONCE THE CHILLER IS INSTALLED AS REQUIRED.

8. FURNISH AND INSTALL NEW 20AMP CIRCUIT FOR NEW UNIT HEATER WITH MOTOR SENTINEL SWITCH. CIRCUIT BACK TO EXISTING SPACE SLOT IN PANEL "LIS" (HIGH VOLTAGE ROOM). FURNISH AND INSTALL 20A-1P CIRCUIT BREAKER (FRAME TYPE TO MATCH EXISTING) WITH (2)#12, (1)#12G, 1/2"C.

ISSUED FOR BID
APRIL 15, 2010

STATE OF VERMONT
GEORGE A. WIBERG
NO. 7083
Electrical
LICENSED
PROFESSIONAL ENGINEER
4/19/10

**BURLINGTON INTERNATIONAL AIRPORT**

SOUTH BURLINGTON
VERMONT

| No. | DATE | REVISION |
|---|---|---|
| | | |


Hallam ICS
38 Eastwood Dr., Suite 200
So. Burlington, VT 05403
Tel: 802.658.4891 Fax: 802.658.1457


BURLINGTON INTERNATIONAL AIRPORT
CHILLER UPGRADE
SO. BURLINGTON VERMONT

BASEMENT LEVEL
ELECTRICAL PLAN

| DRAWN | PROJ.No. |
|---|---|
| SMK | 15649.002 |
| CHECKED | DATE |
| SMK | 04/15/10 |

E-100

G:\DRAWINGS\15649.002 Chiller Upgrade\E-100.dwg Wednesday, November 17, 2010 12:48:41 PM rtm

## FIRST FLOOR - ELECTRICAL PLAN

SCALE: 1/8"=1'-0"

CONTRACTOR TO PROVIDE LABOR AND MATERIALS TO PERFORM THE FOLLOWING WORK:

NOTES:

(GENERAL): CONTRACTOR SHALL USE FIRESTOP AT ALL PENETRATIONS OF FIREWALL WHEN ROUTING NEW FEEDERS TO LOADS AS SHOWN.

1. FURNISH AND INSTALL NEW 250A-3P GE HIGH BREAK RMS SPECTRA CIRCUIT BREAKER IN EXISTING SPACE SECTION OF PANELBOARD "MDP" TO FEED NEW PANELBOARD IN BASEMENT AS SHOWN ON DRAWING E-100. FURNISH AND INSTALL NEW 250A-3P GE HI-BREAK GE SPECTRA SERIES CIRCUIT BREAKER IN EXISTING SPACE SECTION OF "MDP" TO FEED NEW CHILLER IN BASEMENT AS SHOWN ON DRAWING E-100. FURNISH AND INSTALL NEW 20-3P GE HI-BREAK GE SPECTRA SERIES CIRCUIT BREAKER IN EXISTING SPACE SECTION OF "MDP" TO FEED NEW COOLING TOWER SUMP HEATER. FRAME TYPES TO MATCH EXISTING. REFER ALSO TO DWG E-400.

2. FURNISH AND INSTALL NEW VARIABLE FREQUENCY DRIVE (VFD) WITH FUSED DISCONNECT SWITCH SIZED AS SHOWN. REFER ALSO TO ONE-LINE DIAGRAM AND SPECIFICATIONS FOR SPECIFIC REQUIREMENTS OF THESE VFD'S. VFD SHALL HAVE COMMUNICATION CARD TO COMMUNICATE WITH EXISTING DDC SYSTEM FOR MONITORING KW AND SPEED PRIOR TO ORDERING VFD. MOUNT VFD ON OUTSIDE WALL AS SHOWN AND SHALL BE IN WEATHERPROOF RATED BOX. COORDINATE EXACT LOCATION IN FIELD SO AS TO MAINTAIN 3 FEET FREE CLEARANCE IN FRONT PER NEC. FURNISH AND INSTALL (2) NEW 15A-3P GE SPECTRA CIRCUIT BREAKERS IN EXISTING SPACE SLOTS OF EXISTING PANELBOARD "MDP". FRAME TYPES TO MATCH EXISTING. BREAKERS SHALL BE USED TO FEED NEW COOLING TOWER VFD'S & MOTORS AS SHOWN. REFER TO ONE-LINE ON DWG E-400 FOR ADDITIONAL INFORMATION.

3. PROVIDE PROPER FIRE SEAL THROUGH EXISTING FIREWALL FOR CONDUIT PENETRATIONS. REFER TO SPECS.

4. CONTRACTOR SHALL REMOVE EXISTING SOUTHMOST 2'X4' LIGHT FIXTURE IN EXISTING OFFICE ON THE SECOND FLOOR ABOVE SO AS TO AVOID NEW DUCTWORK. MAINTAIN EXISTING LIGHTING CIRCUIT AND SWITCHING FOR THE REMAINING TWO LIGHTS THAT REMAIN.

5. NEW MOD. REFER TO NOTE 5 ON DWG E-100 FOR POWER REQUIREMENTS.

6. RELOCATE EXISTING JUNCTION BOX AND CONDUIT AS REQUIRED TO AVOID NEW DUCTWORK PENETRATION AND ROUTING. MOVE TO ADJACENT AREA NEXT TO DUCTWORK PENETRATION. FURNISH AND INSTALL ALL REQUIRED LABOR AND MATERIAL FOR RELOCATION OF THE BOX.

7. CONTRACTOR SHALL RELOCATE EXISTING LIGHT FIXTURES SO AS NOT TO INTERFERE WITH NEW COOLING TOWER. RELOCATE SO ADJACENT TO COOLING TOWER. COORDINATE FINAL LOCATION IN FIELD. EXTEND WIRING AND CONDUIT AS REQUIRED.

8. FURNISH AND INSTALL NEW NEMA 3R FUSED DISCONNECT FOR NEW SUMP HEATER. MOUNT ON SIDE OF COOLING TOWER AS REQUIRED. PROVIDE FUSE SIZE AS SHOWN. SEE ALSO E-400.

ISSUED FOR BID
APRIL 15, 2010

STATE OF VERMONT
GEORGE A. WEBER
NO. 7083
Electrical
LICENSED
PROFESSIONAL ENGINEER
4/19/10

**BURLINGTON INTERNATIONAL AIRPORT**

SOUTH BURLINGTON
VERMONT

| No. | DATE | REVISION |
|---|---|---|
| | | |


HallamICS
38 Eastwood Dr., Suite 200
So. Burlington, VT 05403
Tel: 802.658.4891 Fax: 802.658.1457


BURLINGTON INTERNATIONAL AIRPORT
CHILLER UPGRADE
SO. BURLINGTON VERMONT

FIRST FLOOR
ELECTRICAL PLAN

| DRAWN | PROJ.No. |
|---|---|
| SMK | 15649.002 |
| CHECKED | DATE |
| SMK | 04/15/10 |

E-101

G:\DRAWINGS\15649.002 Chiller Upgrade\E-101.dwg Wednesday, November 17, 2010 12:48:37 PM rtm

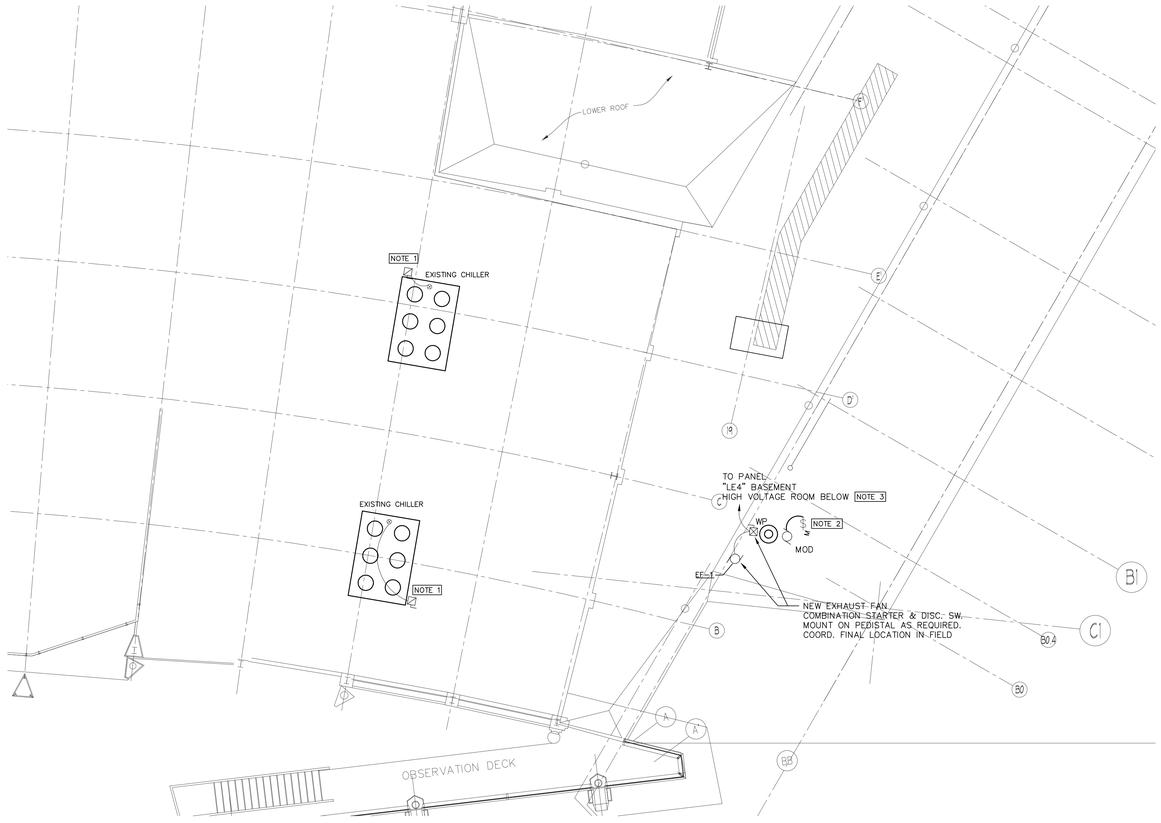


## PARTIAL ROOF PLAN- DEMOLTION/PROPOSED

SCALE: 1/8"=1'-0"

ELECTRICAL NOTES:

NOTE: NO DEMOLITION WORK SHALL OCCUR UNTIL THE NEW CHILLER SYSTEM IS UP AND RUNNING. TYPICAL.

1. REMOVE EXISTING ELECTRICAL WIRING AND ELECTRICAL EQUIPMENT TO EXISTING CHILLER COMPLETE BACK TO SOURCE – EXISTING MOTOR CONTROL CENTER MAIN TERMINAL S. BASEMENT. EXISTING CONDUIT SHALL REMAIN AND BE CAPPED. PROVIDE PULLWIRE WITHIN EXISTING CONDUIT AS THE EXISTING CABLE IS REMOVED.
2. NEW MOD. REFER TO NOTE 5 ON DRAWING E-100 FOR POWER REQUIREMENTS.
3. FURNISH AND INSTALL EMERGENCY POWER FOR NEW EF-1 AS SHOWN ON DWG E-400. POWER IS FROM PANEL LE4 IN BASEMENT HIGH VOLTAGE ROOM.

ISSUED FOR BID
APRIL 15, 2010

STATE OF VERMONT
GEORGE A. WISSER
NO. 7083
Electrical
LICENSED
PROFESSIONAL ENGINEER
4/19/10

**BURLINGTON INTERNATIONAL AIRPORT**

SOUTH BURLINGTON
VERMONT

| No. | DATE | REVISION |
|---|---|---|
| | | |

HallamICS
38 Eastwood Dr., Suite 200
So. Burlington, VT 05403
Tel: 802.658.4891 Fax: 802.658.1457

BURLINGTON INTERNATIONAL AIRPORT
CHILLER UPGRADE
SO. BURLINGTON VERMONT

PARTIAL ROOF DEMO/PROPOSED
ELECTRICAL PLAN

| DRAWN | PROJ.No. |
|---|---|
| JAL | 15649.002 |
| CHECKED | DATE |
| SMK | 04/15/10 |

E-102

G:\DRAWINGS\15649.002 Chiller Upgrade\E-102.dwg Wednesday, November 17, 2010 12:48:33 PM rim

## PENTHOUSE - ELECTRICAL PLAN- DEMOLITION

SCALE: 1/8"=1'-0"

PROPOSED NOTES:

NOTE: NO DEMOLITION WORK SHALL OCCUR UNTIL THE NEW CHILLER SYSTEM IS UP AND RUNNING. TYPICAL.

1. REMOVE EXISTING ELECTRICAL WIRING, CONDUIT AND ELECTRICAL EQUIPMENT TO EXISTING CHILLED WATER SUPPLY AND RETURN PUMPS COMPLETE BACK TO SOURCE – MCCP CUBICLES #5 & #6.

2. REMOVE EXISTING ELECTRICAL WIRING AND ELECTRICAL EQUIPMENT TO EXISTING CHILLER COMPLETE BACK TO SOURCE – PANEL MDH-E4 (1ST FLOOR). EXISTING 2-1/2" CONDUIT SHALL REMAIN AT ROOF LEVEL BUT SHALL BE CAPPED. PROVIDE NEW PULLWIRE WITHIN CONDUIT AS THE EXISTING CABLES ARE REMOVED. EXISTING WIRING IS (3)#350MCM, #4G. REMOVE EXISTING 208VOLT CIRCUIT AND EQUIPMENT AT CHILLER AS WELL TO PANEL L2B-6.8.

ISSUED FOR BID
APRIL 15, 2010

G:\DRAWINGS\15649.002 Chiller Upgrade\E-103.dwg Wednesday, November 17, 2010 12:48:30 PM rlm

STATE OF VERMONT
GEORGE A. WEBER
NO. 7083
Electrical
LICENSED
PROFESSIONAL ENGINEER
4/19/10

**BURLINGTON INTERNATIONAL AIRPORT**

SOUTH BURLINGTON
VERMONT

| No. | DATE | REVISION |
|---|---|---|
| | | |


Hallam ICS
38 Eastwood Dr., Suite 200
So. Burlington, VT 05403
Tel: 802.658.4891 Fax: 802.658.1457


BURLINGTON INTERNATIONAL AIRPORT
CHILLER UPGRADE
SO. BURLINGTON VERMONT

MAIN TERMINAL
PENTHOUSE + ROOF
ELECTRICAL DEMOLITION PLAN

| DRAWN | PROJ.No. |
|---|---|
| SMK | 15649.002 |
| CHECKED | DATE |
| SMK | 04/15/10 |

E-103

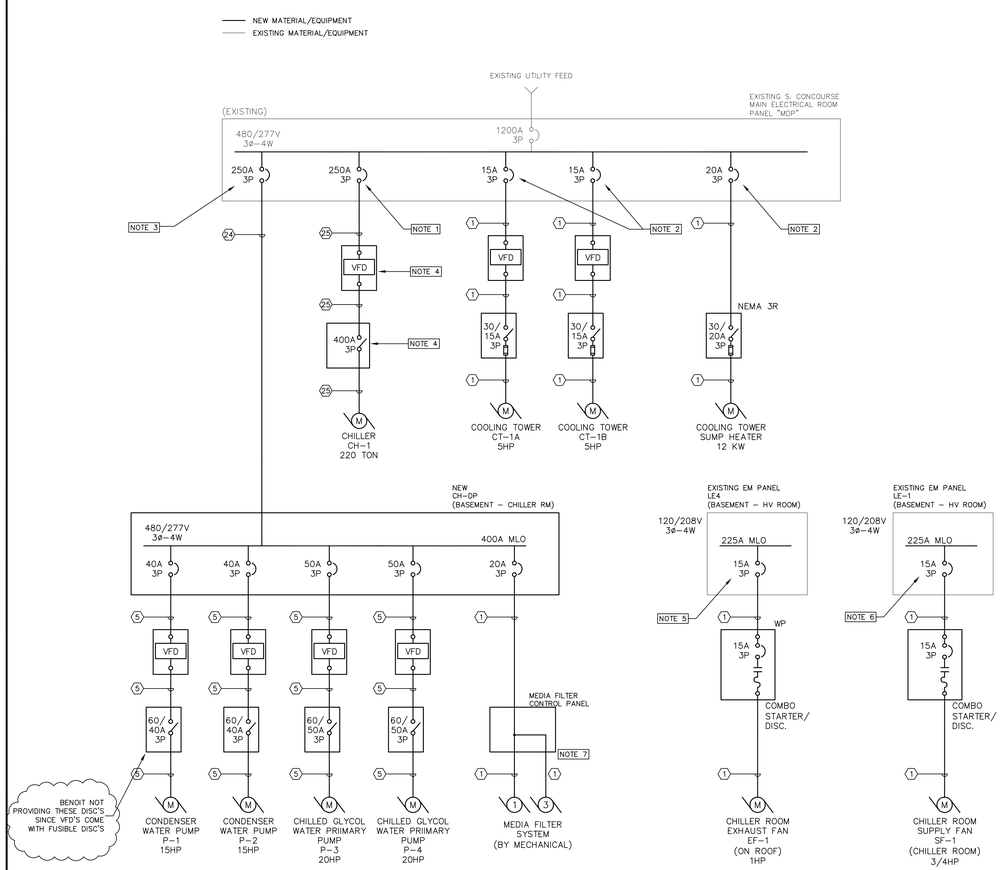


## ONE-LINE DIAGRAM

SCALE: NONE

NOTES:

1. FURNISH AND INSTALL NEW 250A-3P GE HI-BREAK SPECTRA SERIES CIRCUIT BREAKER. FRAME TYPE TO MATCH EXISTING. MOUNT IN EXISTING SPACE SECTION.
2. FURNISH AND INSTALL NEW 15A-3P AND 20A-3P GE HI-BREAK SPECTRA SERIES CIRCUIT BREAKER. FRAME TYPE TO MATCH EXISTING. MOUNT IN EXISTING SPACE SECTION.
3. FURNISH AND INSTALL NEW 250A-3P GE HI-BREAK SPECTRA SERIES CIRCUIT BREAKER. FRAME TYPE TO MATCH EXISTING. MOUNT IN EXISTING SPACE SECTION.
4. VFD AND NON-FUSED DISCONNECT FOR CHILLER IS PROVIDED BY CHILLER MANUFACTURER. WIRED BY E.C.
5. FURNISH AND INSTALL 15A-3P CIRCUIT BREAKER (FRAME TYPE TO MATCH EXISTING) IN EXISTING SQ "D" NQOB 225A MLO PANEL.
6. FURNISH AND INSTALL 15A-3P CIRCUIT BREAKER (FRAME TYPE TO MATCH EXISTING) IN EXISTING CUTLER HAMMER CHB 225A MLO PANEL.
7. MEDIA FILTER CONTROLLER FURNISHED BY MECHANICAL, WIRED AND INSTALLED BY ELECTRICAL.

## NEW CH-DP

480/277 VOLTS, 3 - PHASE, 4 - WIRE
400A MAIN LUG ONLY
10K AIC
BR. BREAKERS - BOLTED
REMARKS: -

LOCATION: CHILLER ROOM - BASEMENT
MOUNTING: SURFACE
TYPE: SQ D NEHB
TOTAL LOAD: 48.6 KVA

| CIRC. NO | SIZE | DESCRIPTION | KVA | PH | CIRC. NO | SIZE | DESCRIPTION | KVA |
|---|---|---|---|---|---|---|---|---|
| 1 | | | | A | 2 | | | |
| 3 | 40A-3P | CONDENSOR WATER PUMP P-1 | 11.1 | B | 4 | 50A-3P | CHILLED GLYCOL PRIMARY WATER PUMP P-4 | 11.1 |
| 5 | | | | C | 6 | | | |
| 7 | | | | A | 8 | | | |
| 9 | 40A-3P | CONDENSOR WATER PUMP P-2 | 11.1 | B | 10 | 20A-3P | MEDIA FILTER F-1 | 4.2 |
| 11 | | | | C | 12 | | | |
| 13 | | | | A | 14 | | | |
| 15 | 50A-3P | CHILLED GLYCOL PRIMARY WATER PUMP P-3 | 11.1 | B | 16 | 20A-3P | SPARE | |
| 17 | | | | C | 18 | | | |
| 19 | | SPACE | | A | 20 | | SPACE | |
| 21 | | SPACE | | B | 22 | | SPACE | |
| 23 | | SPACE | | C | 24 | | SPACE | |
| 25 | | SPACE | | A | 26 | | SPACE | |
| 27 | | SPACE | | B | 28 | | SPACE | |
| 29 | | SPACE | | C | 30 | | SPACE | |
| 31 | | SPACE | | A | 32 | | | |
| 33 | | SPACE | | B | 34 | 60A-3P | SPARE | - |
| 35 | | SPACE | | C | 36 | | | |
| 37 | | SPACE | | A | 38 | | | |
| 39 | | SPACE | | B | 40 | 40A-3P | SPARE | - |
| 41 | | SPACE | | C | 42 | | | |

## WIRE AND CONDUIT SCHEDULE

| HEX # | WIRE | CONDUIT | MAX AMP RATING | HEX # | WIRE | CONDUIT | MAX AMP RATING |
|---|---|---|---|---|---|---|---|
| 1 | (3)#12 + (1)#12G. | 3/4" | 20 | 17 | (3)#2/0 + (1)#6G. | 2" | 175 |
| 2 | (4)#12 + (1)#12G. | 3/4" | 20 | 18 | (4)#2/0 + (1)#6G. | 2" | 175 |
| 3 | (3)#10 + (1)#10G. | 3/4" | 30 | 19 | (3)#3/0 + (1)#6G. | 2-1/2" | 200 |
| 4 | (4)#10 + (1)#10G. | 3/4" | 30 | 20 | (4)#3/0 + (1)#6G. | 2-1/2" | 200 |
| 5 | (3)#8 + (1)#10G. | 3/4" | 50 | 21 | (3)#4/0 + (1)#4G. | 2-1/2" | 230 |
| 6 | (4)#8 + (1)#10G. | 3/4" | 50 | 22 | (4)#4/0 + (1)#4G. | 2-1/2" | 230 |
| 7 | (3)#6 + (1)#8G. | 1" | 65 | 23 | (3)250KCMIL + (1)#4G. | 2-1/2" | 255 |
| 8 | (4)#6 + (1)#8G. | 1" | 65 | 24 | (4)250 KCMIL + (1)#4G. | 2-1/2" | 255 |
| 9 | (3)#4 + (1)#8G. | 1-1/4" | 85 | 25 | (3)300 KCMIL + (1)#4G. | 3" | 285 |
| 10 | (4)#4 + (1)#8G. | 1-1/4" | 85 | 26 | (4)300 KCMIL + (1)#4G. | 3" | 285 |
| 11 | (3)#3 + (1)#8G. | 1-1/4" | 100 | 27 | (3)350 KCMIL + (1)#4G. | 3" | 310 |
| 12 | (4)#3 + (1)#8G. | 1-1/4" | 100 | 28 | (4)350 KCMIL + (1)#4G. | 3" | 310 |
| 13 | (3)#1 + (1)#6G. | 1-1/2" | 130 | 29 | (3)600 KCMIL + (1)#3G. | 4" | 420 |
| 14 | (4)#1 + (1)#6G. | 1-1/2" | 130 | 30 | (4)600 KCMIL + (1)#3G. | 4" | 420 |
| 15 | (3)#1/0 + (1)#6G. | 2" | 150 | 31 | (8)350 KCMIL + (2)#2/0G. | (2) 3" | 620 |
| 16 | (4)#1/0 + (1)#6G. | 2" | 150 | | | | |
| | | | | | | | |

NOTE: STANDARD CONDUIT SIZE FOR CORRESPONDING FEEDER SIZE IS SHOWN. INSTALL CONDUIT OF SIZE INDICATED FOR ALL ABOVE GRADE LOCATIONS.

ISSUED FOR BID
APRIL 15, 2010

STATE OF VERMONT
GEORGE A. WISSER
NO. 7083 Electrical
LICENSED PROFESSIONAL ENGINEER
4/19/10

BURLINGTON INTERNATIONAL AIRPORT

SOUTH BURLINGTON VERMONT

| No. | DATE | REVISION |
|---|---|---|

HallamICS
38 Eastwood Dr., Suite 200
So. Burlington, VT 05403
Tel: 802.658.4891 Fax: 802.658.1457

BURLINGTON INTERNATIONAL AIRPORT
CHILLER UPGRADE
SO. BURLINGTON VERMONT

ELECTRICAL
ONE-LINE DIAGRAM
DETAILS, + SCHEDULES

| DRAWN | PROJ.No. |
|---|---|
| SMK | 15649.002 |
| CHECKED | DATE |
| SMK | 04/15/10 |

E-400

C:\DRAWINGS\15649.002 Chiller Upgrade\E-400.dwg Wednesday, November 17, 2010 12:48:29 PM rrm