DMUC Overlay District
Urban Design Issues

height & massing
street activation

Submitted to the Burlington Planning Commission
by Julie Campoli, Terra Firma Urban Design
June 15, 2016

Height & Massing

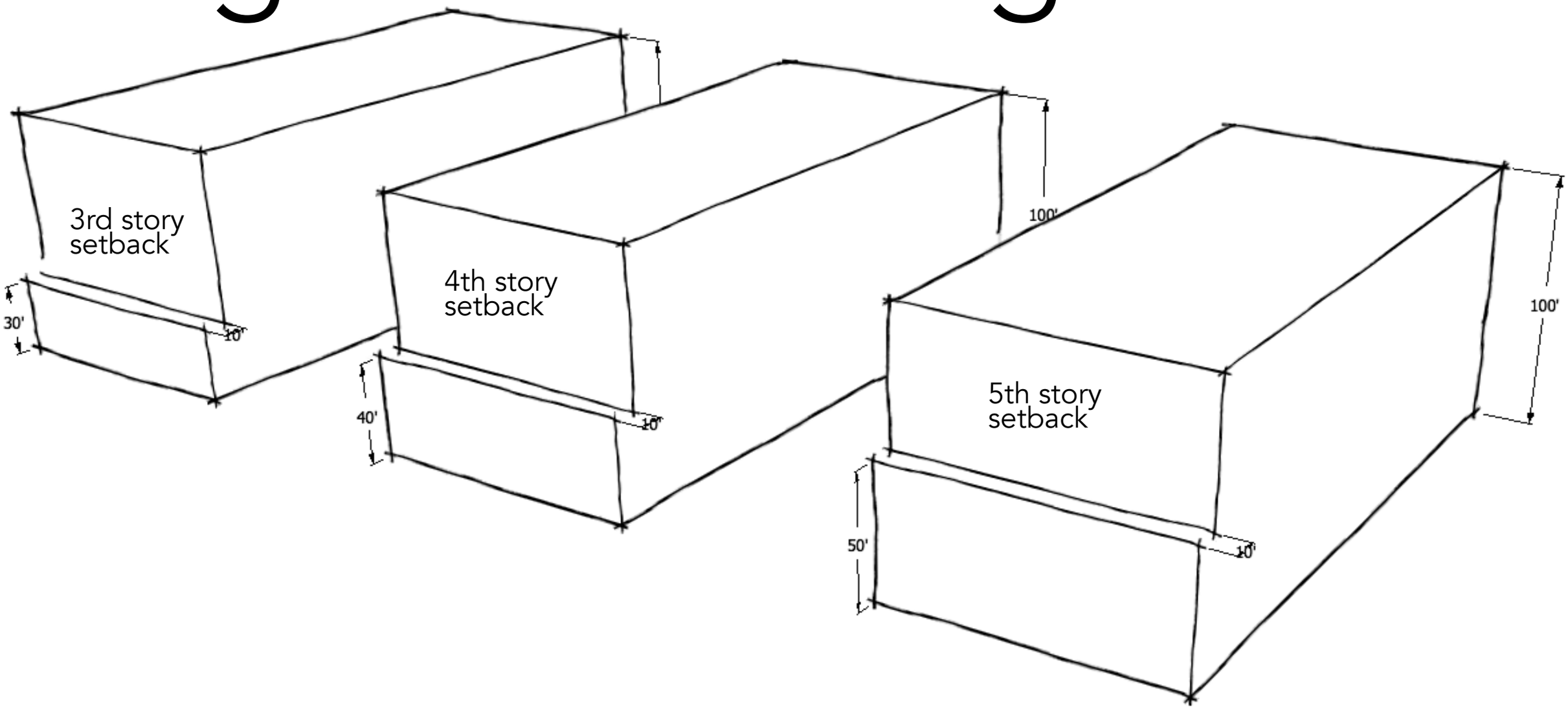

B.iv.a. Required Building Height Setbacks

In upper story setback at least ten (10) feet from the primary plane of the façade below shall occur within the first 60- ft of Building height at either the 3rd, 4th, or 5th story in order to provide a change in the vertical plane of the façade. Such a change shall involve the full width of the Building facade

Setback after 4th floor

Setback after 6th floor

High-rise tower set back from 6-story podium (previous slide)

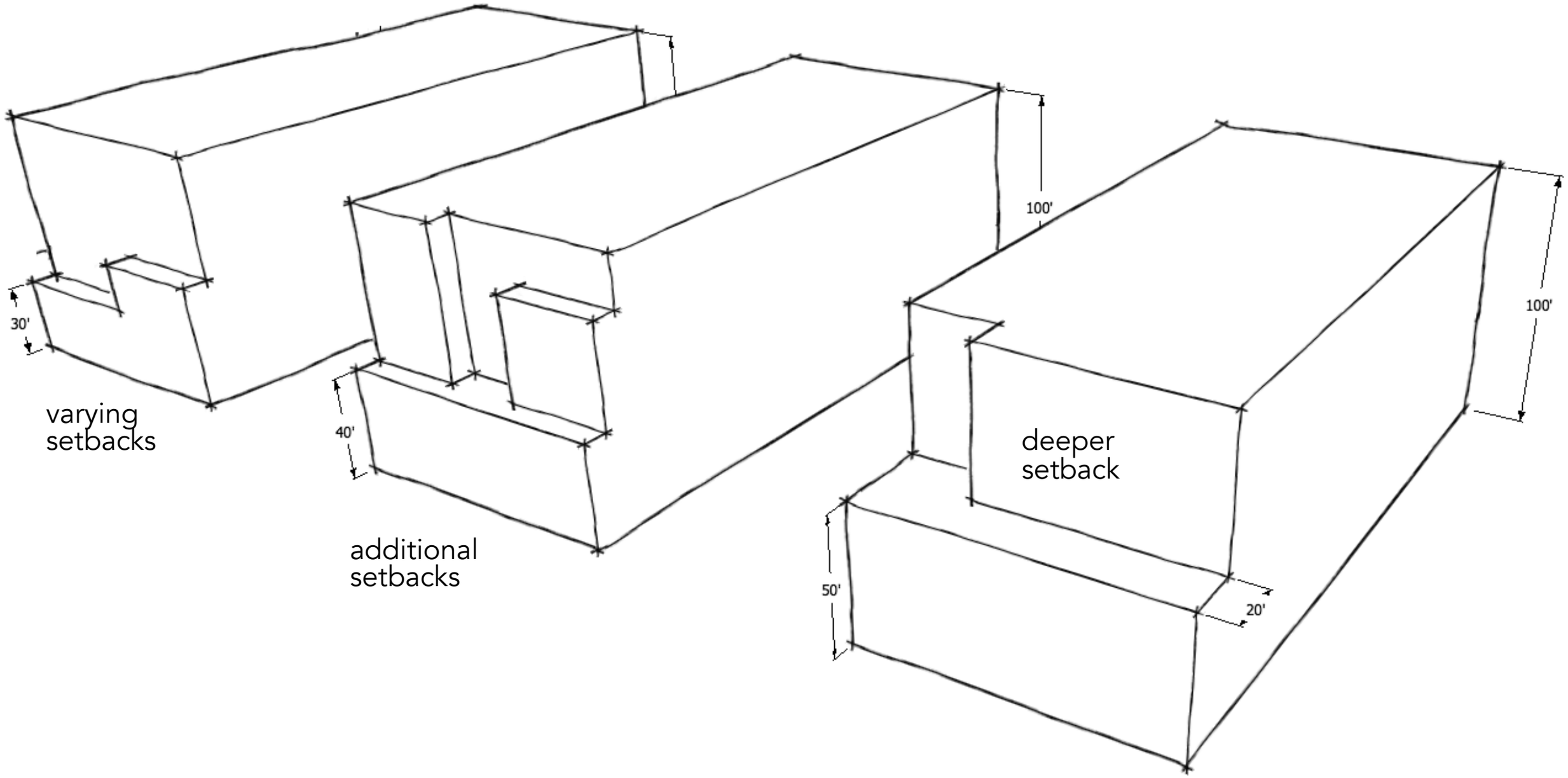

B.iv.a. Required Building Height Setbacks - +6 stories

Such a change shall involve the full width of the Building facade but does not have to occur in the same story. Additional upper story setbacks may occur in order to provide additional terraces,

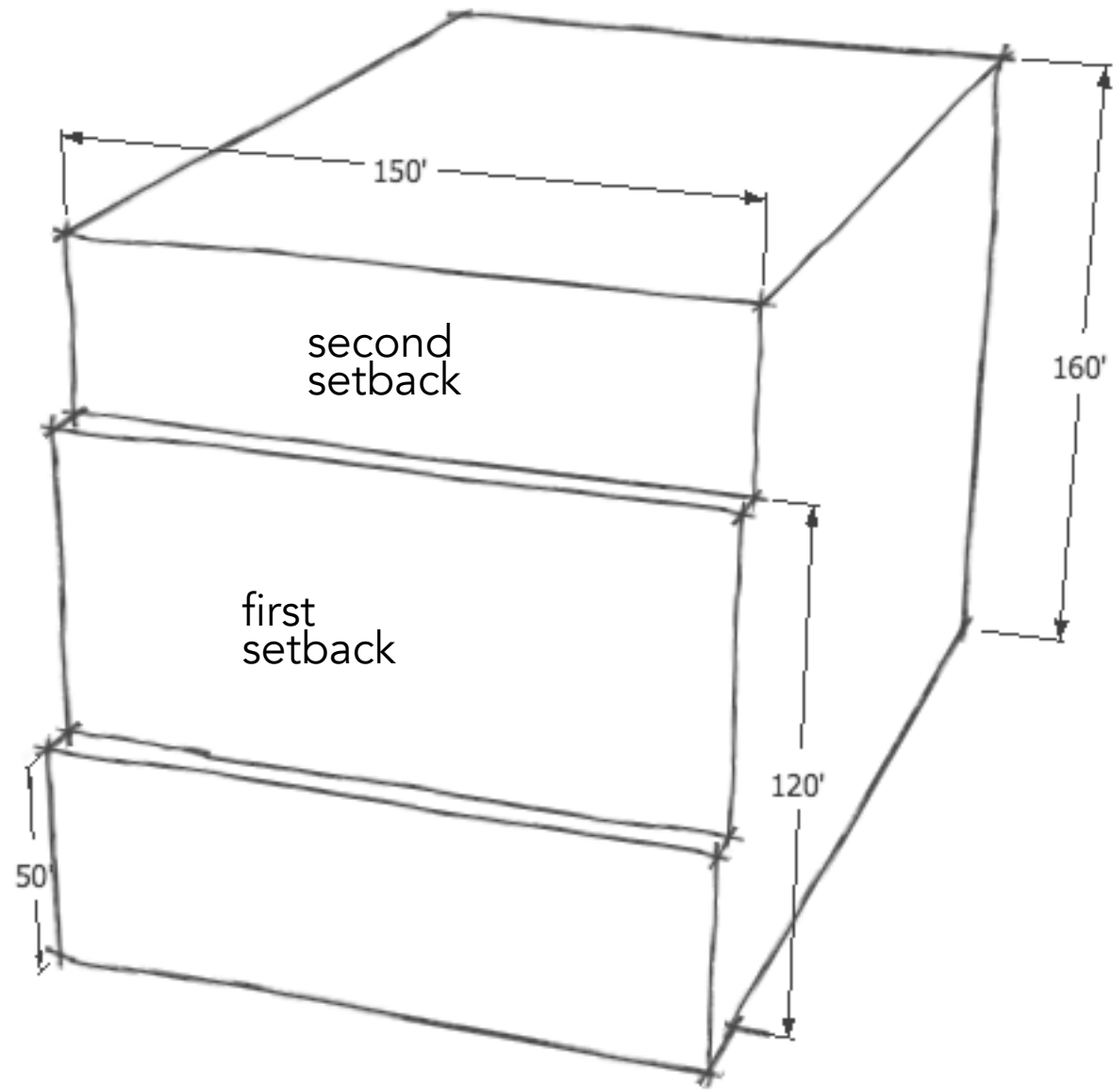

B.iv.b. Required Building Height Setbacks +10 stories

For Building facades exceeding ten (10) stories in height a second upper story setback at least ten (10) feet from the primary plane of the façade below shall occur at either the10th,11th, or 12th story in order to provide another change in the vertical plane of the façade. Such a change shall involve the full width of the Building façade

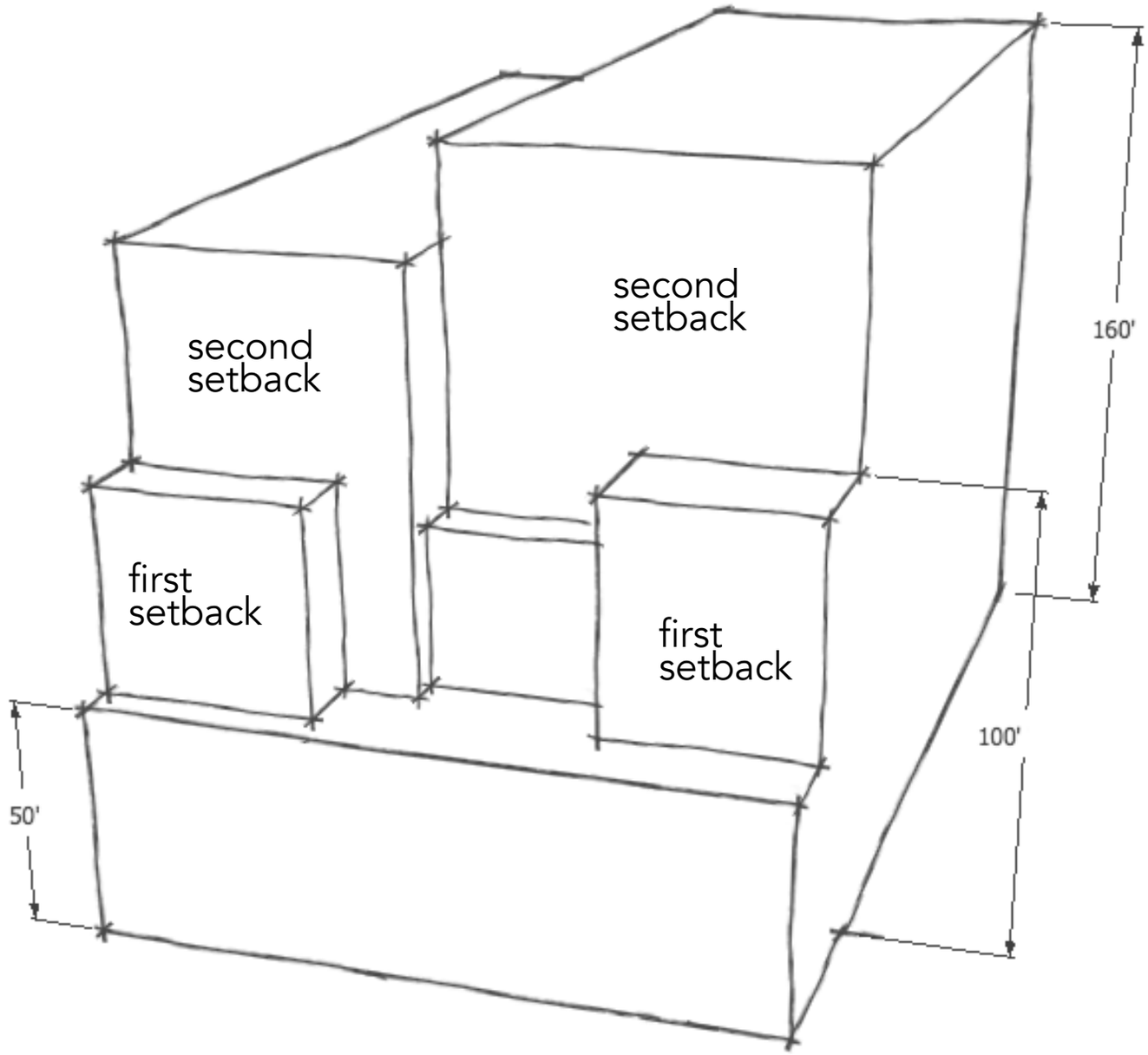

B.iv.b. Required Building Height Setbacks

Such a change shall involve the full width of the Building façade, but does not have to occur in the same story. Additional upper story setbacks may occur in order to provide additional terraces, taper and visual interest to taller Buildings.

Setbacks on 5th, 9th, and 12th floors *

*This example does not conform to BTV proposal as setbacks don't include the full width of both building planes

Setbacks on 5th, 9th, and 12th floors, used as terraces

*This example does not conform to BTV proposal as setbacks don’t include the full width of both building planes

Setbacks on 5th, 9th, and 12th floors *

Setbacks on varying floors

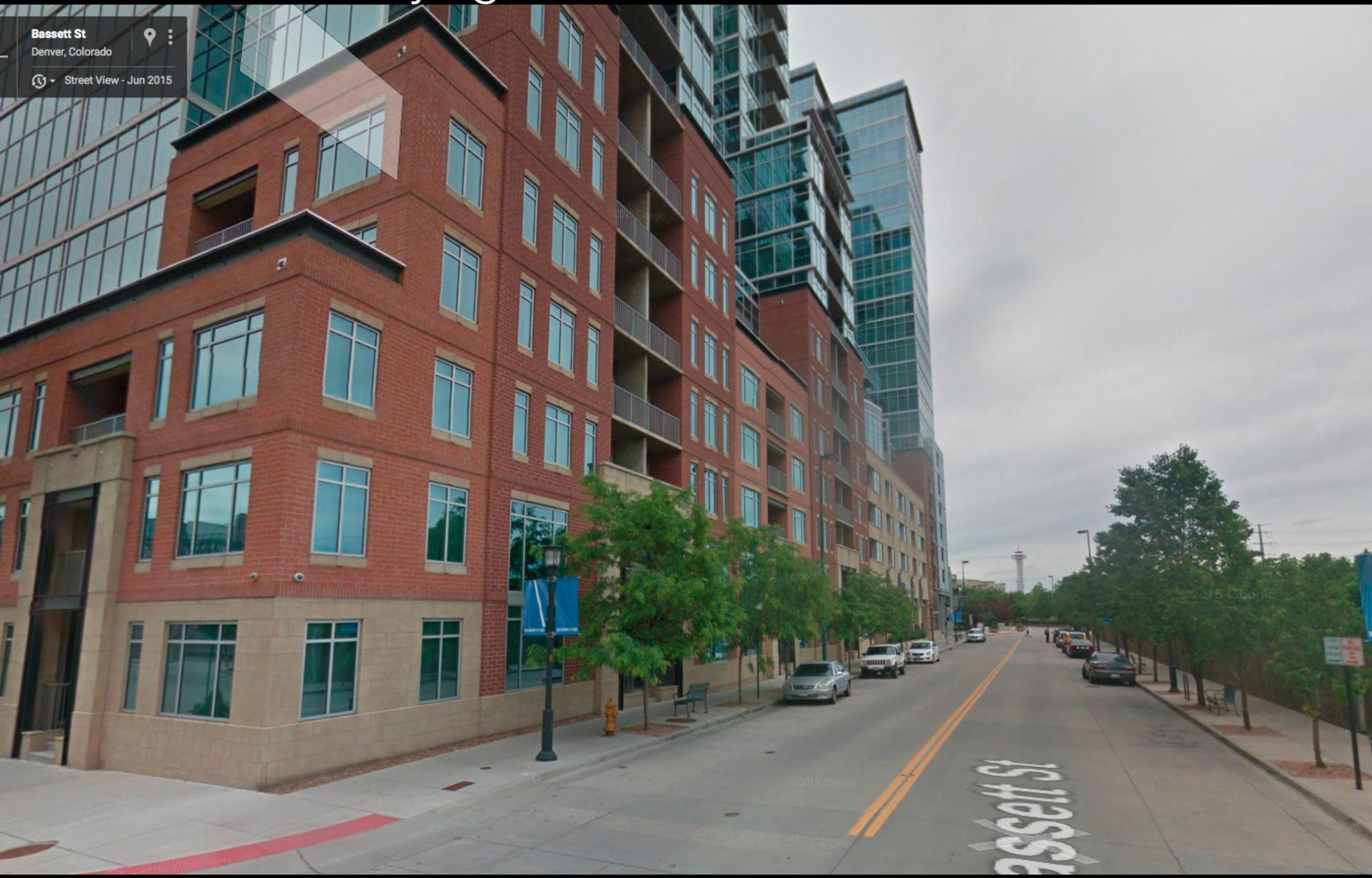

Residential neighborhood example w/ no ground floor retail

Setbacks on varying floors

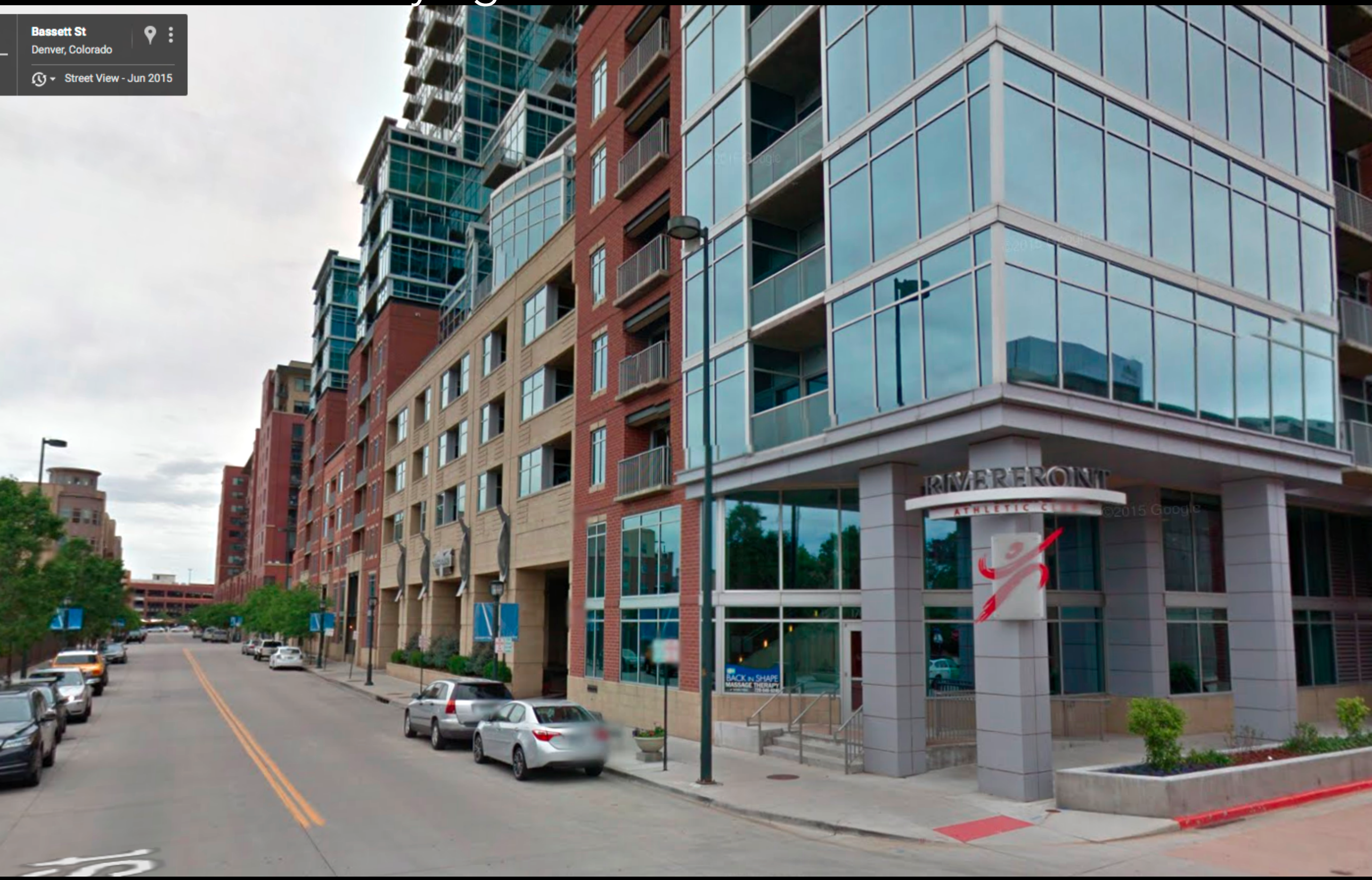

Residential neighborhood example w/ no ground floor retail

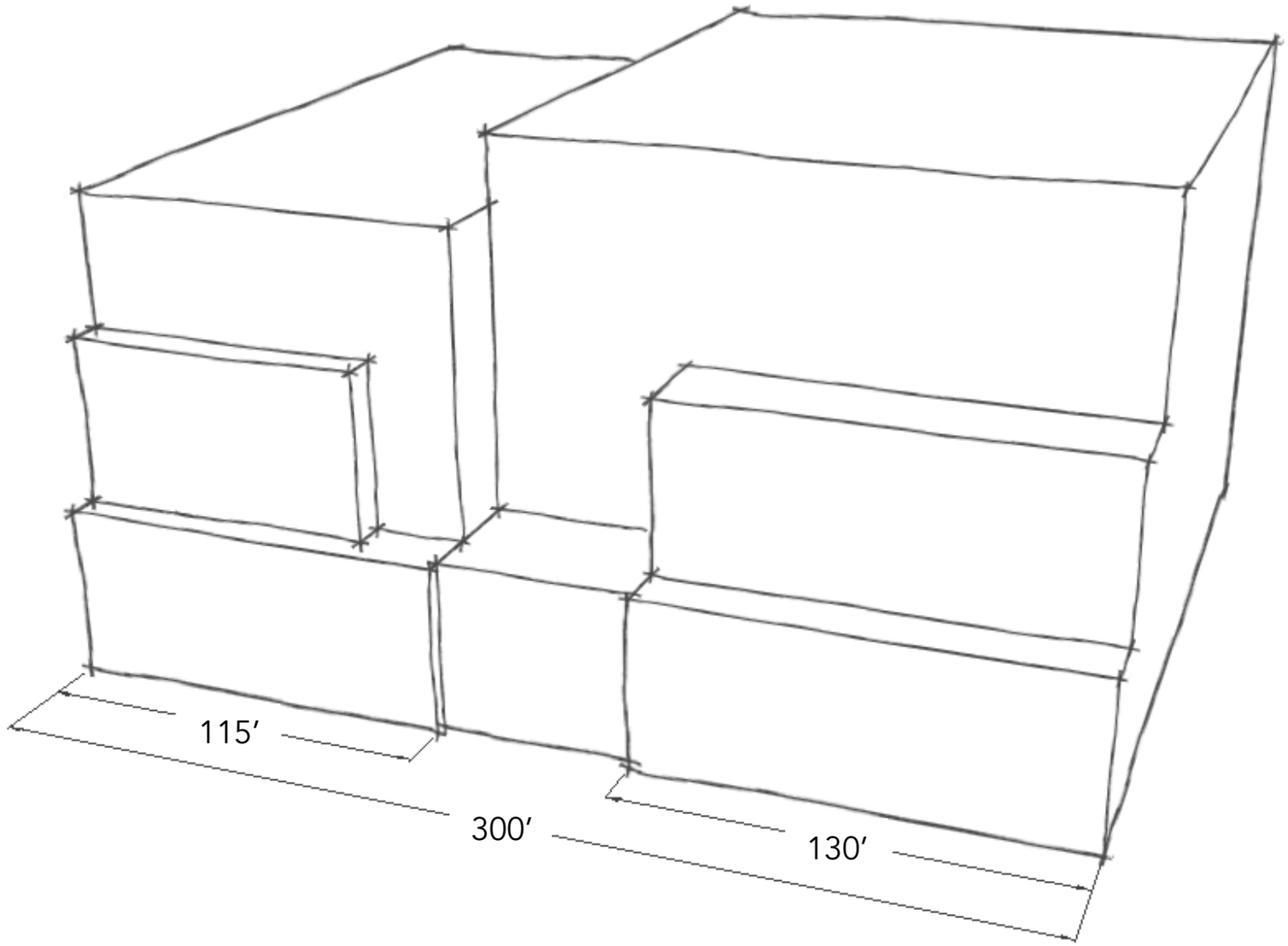

B.iii. Facade Articulation

Buildings with facades greater than one hundred and fifty (150) feet in width must include a more substantial change in the horizontal plane of the façade where for every one hundred and fifty (150) feet in facade width, one (1) or more architectural bay as required above must either recess or project by at least four (4) feet involving the full height of the façade from the average plane of the street wall portion of the facade. Such bays shall occur no closer than fifty(50) feet from the Building's corner.

Projecting bays break up a scale of a facade longer than 150’

Recessed planes break up scale of a facade longer than 150′

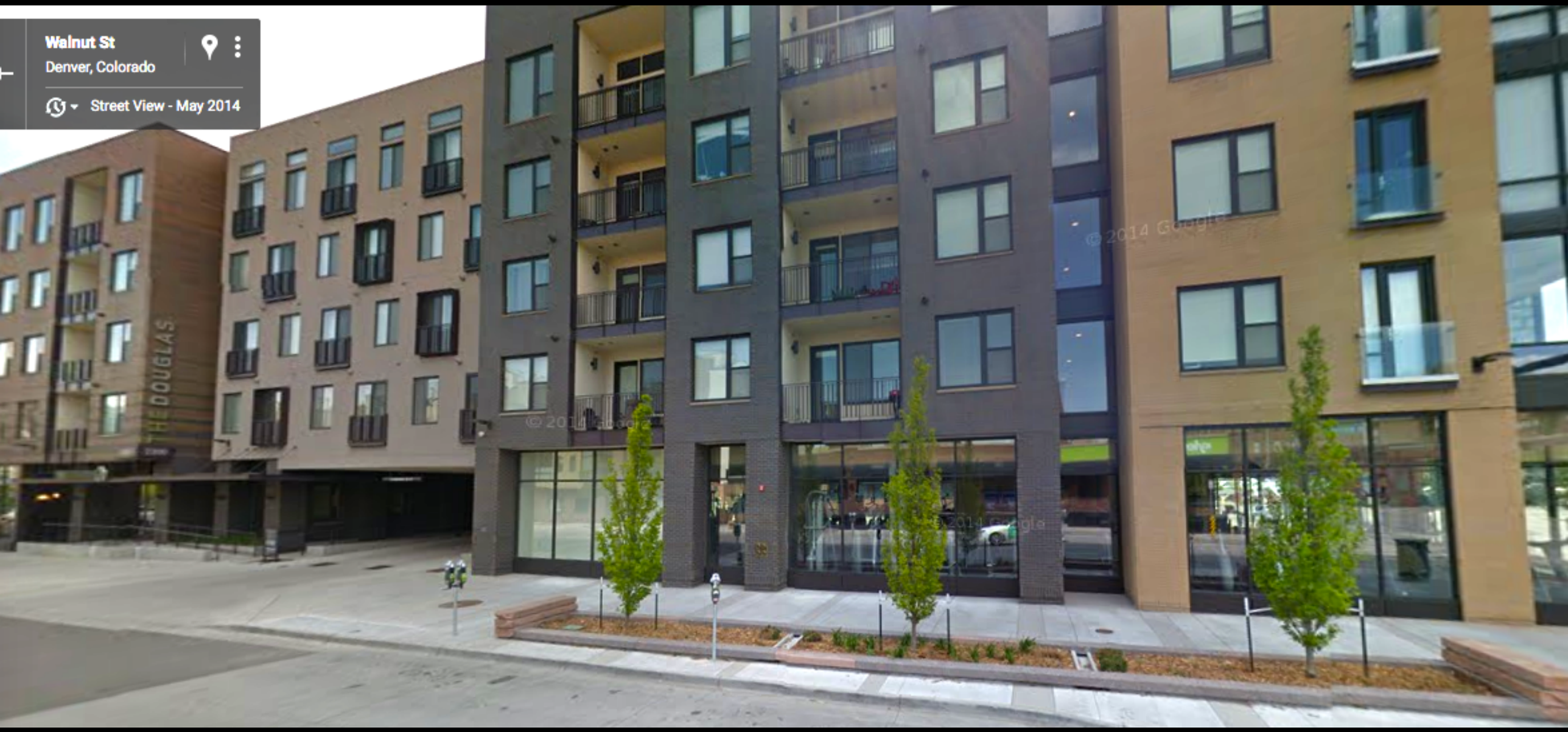

Recessed central bay breaks up a scale of a facade longer than 150’

Floor Area Ratio of 9.5 Potential Building Envelope

Full coverage of lot at ground level, and decreasing allowed coverages at upper stories create additional building setbacks

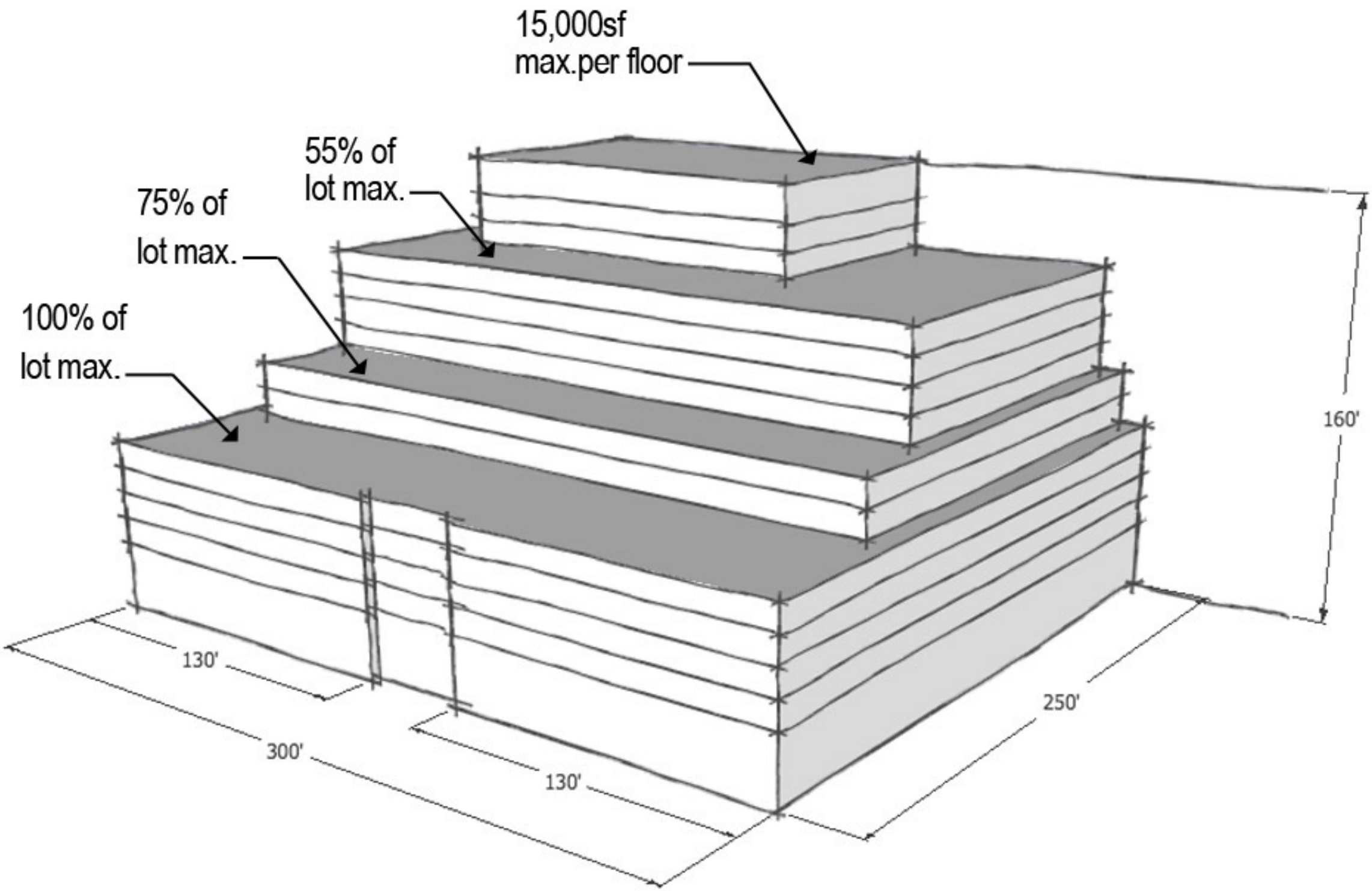

Floor Area Ratio of 9.5

View of floors 6-14 are not visible at eye level from sidewalks along the street due to setbacks created by maximum coverages at upper levels

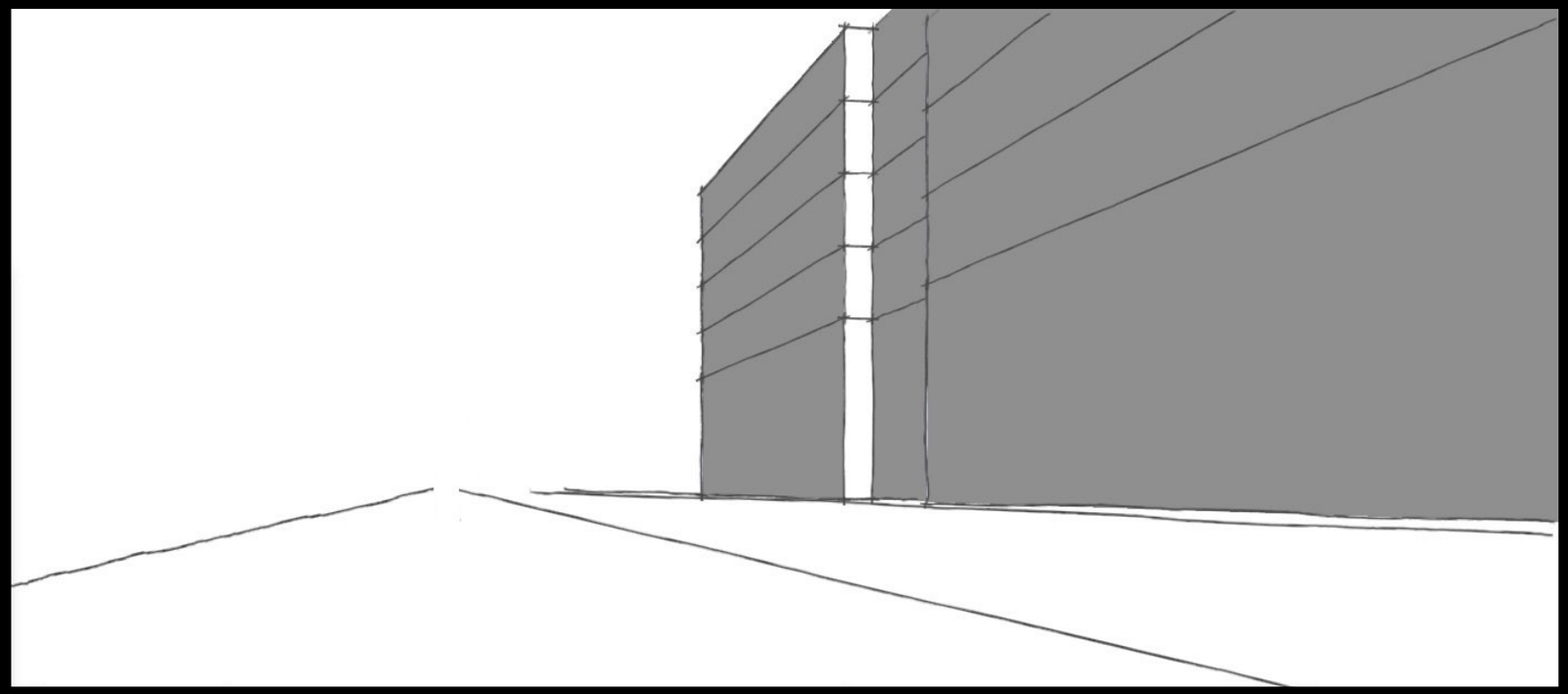

View from sidewalk across the street

Eye level view from adjacent sidewalk

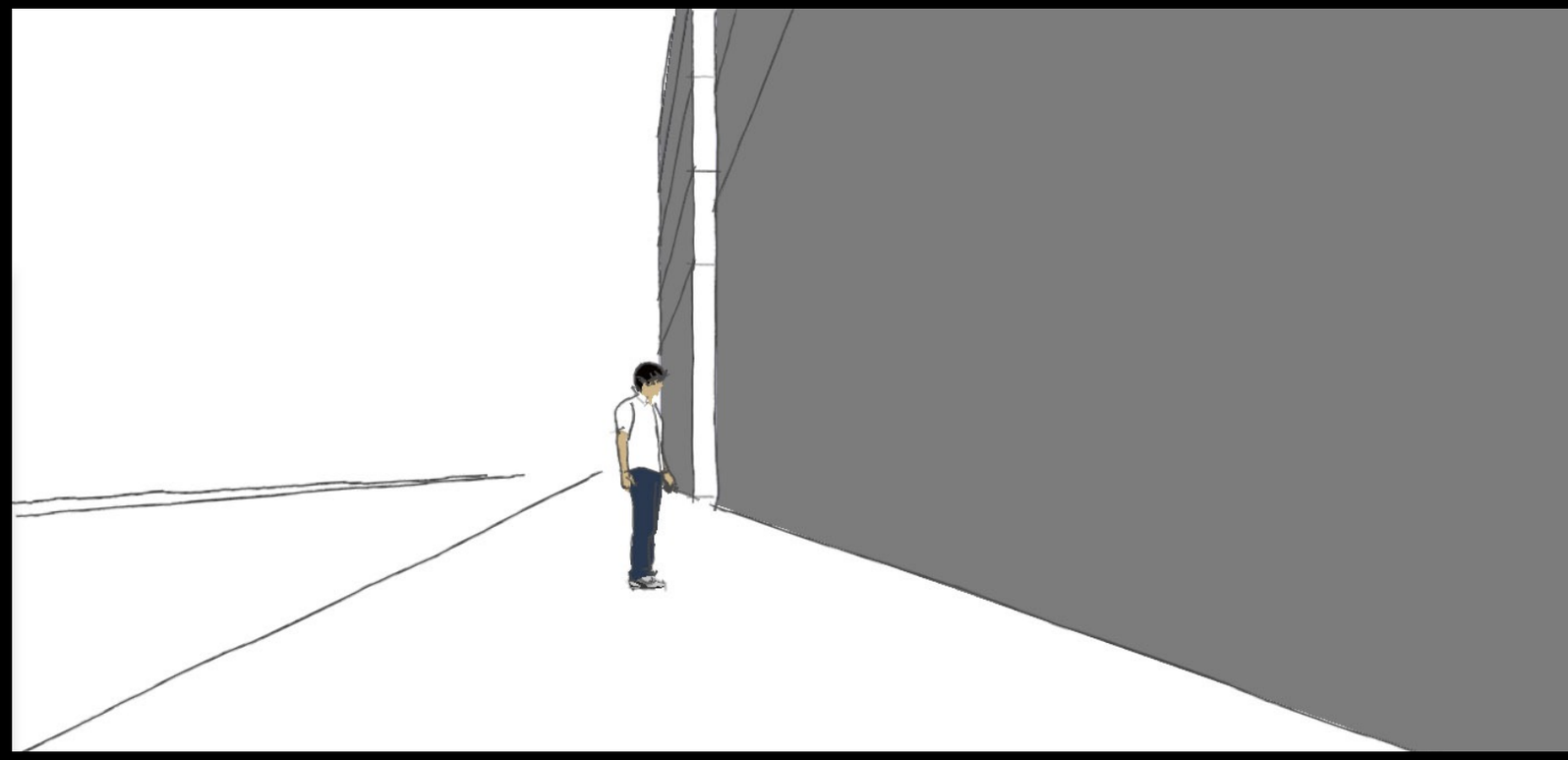

Potential building envelopes along Church St. and in one block of DMUC overlay district

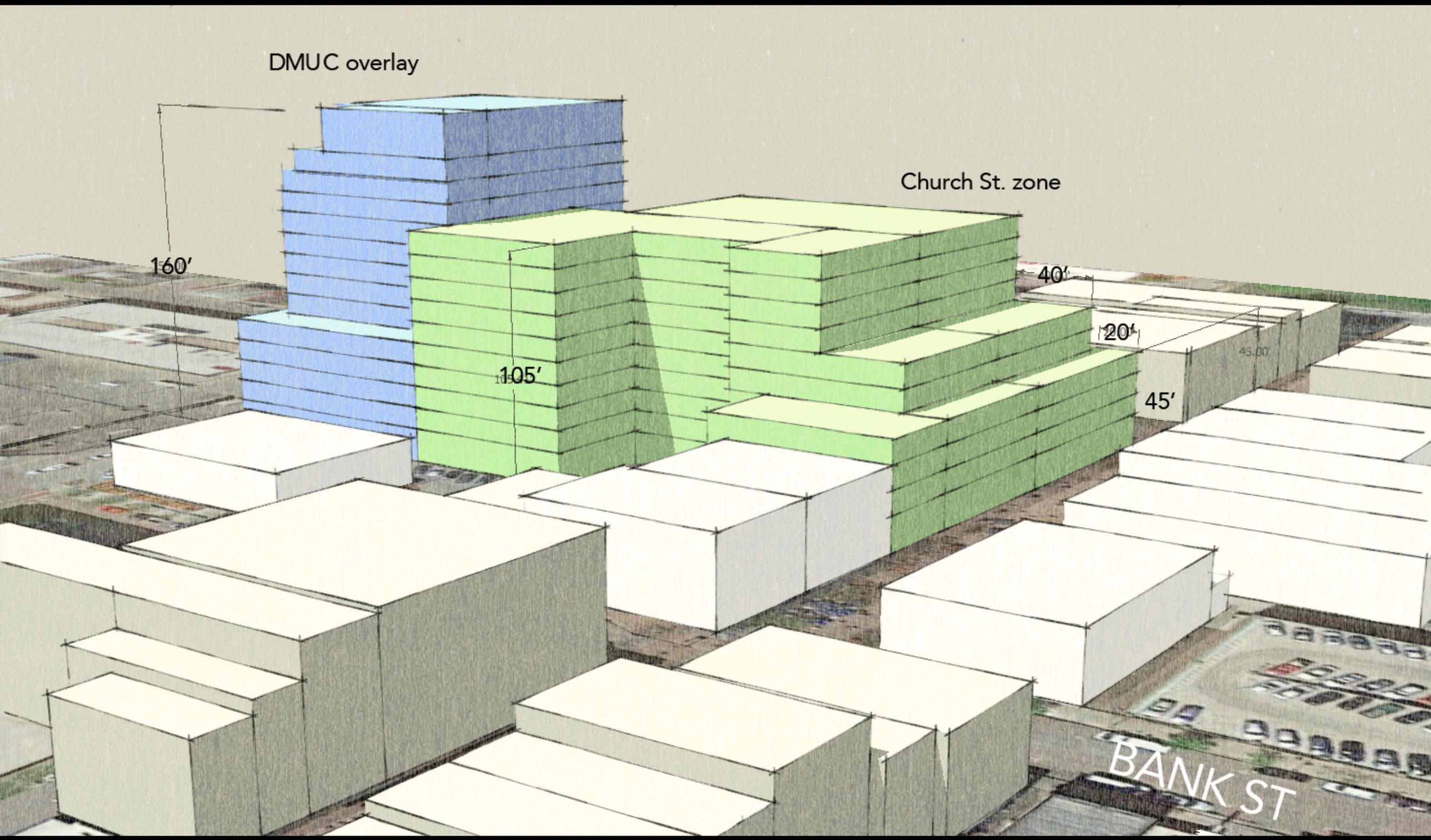

Potential building envelopes in Church St. zone (green) and DMUC overlay district (blue)

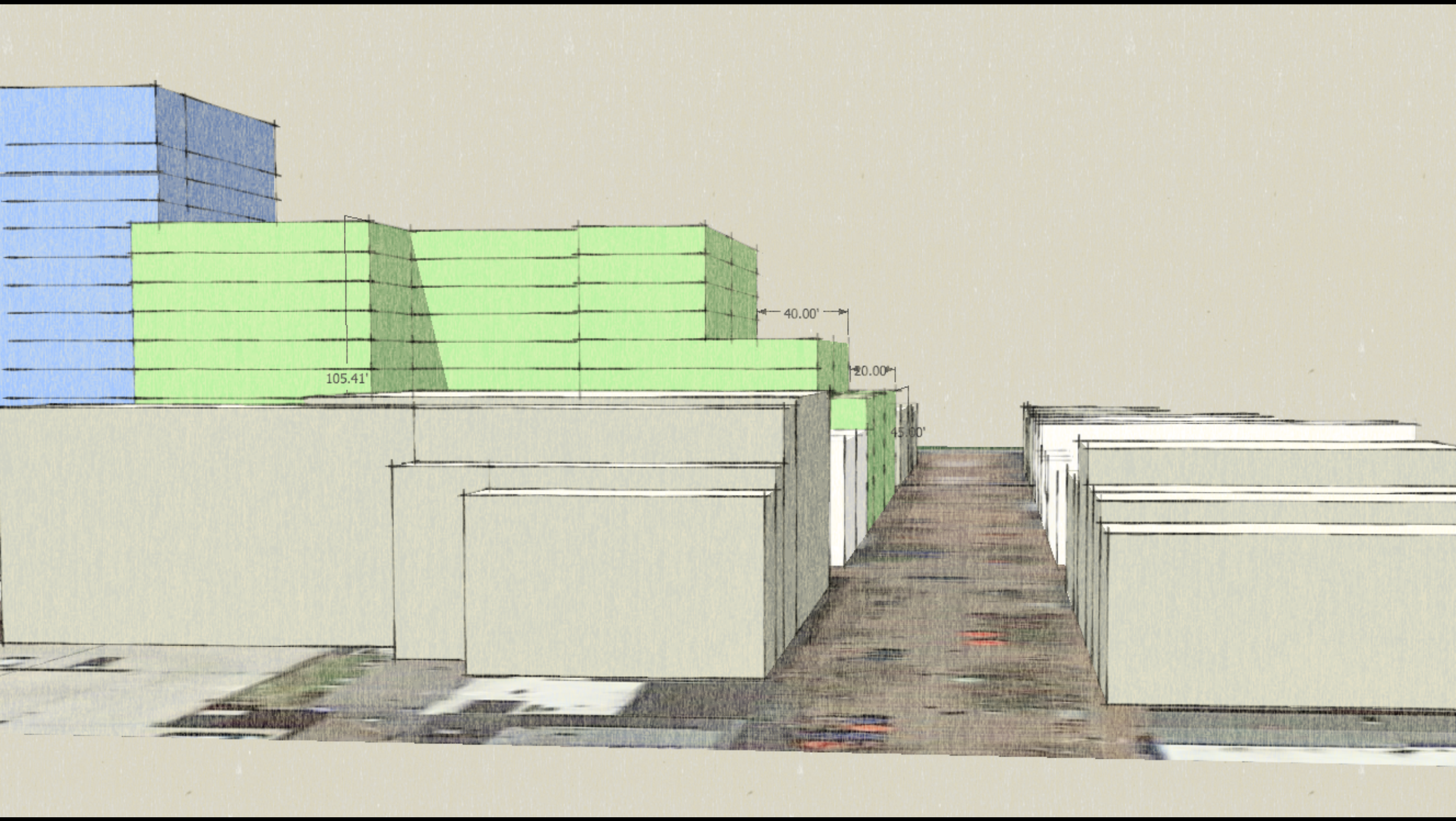

Low aerial view (not eye level) looking north on Church

Potential building envelopes in Church St. zone (green)

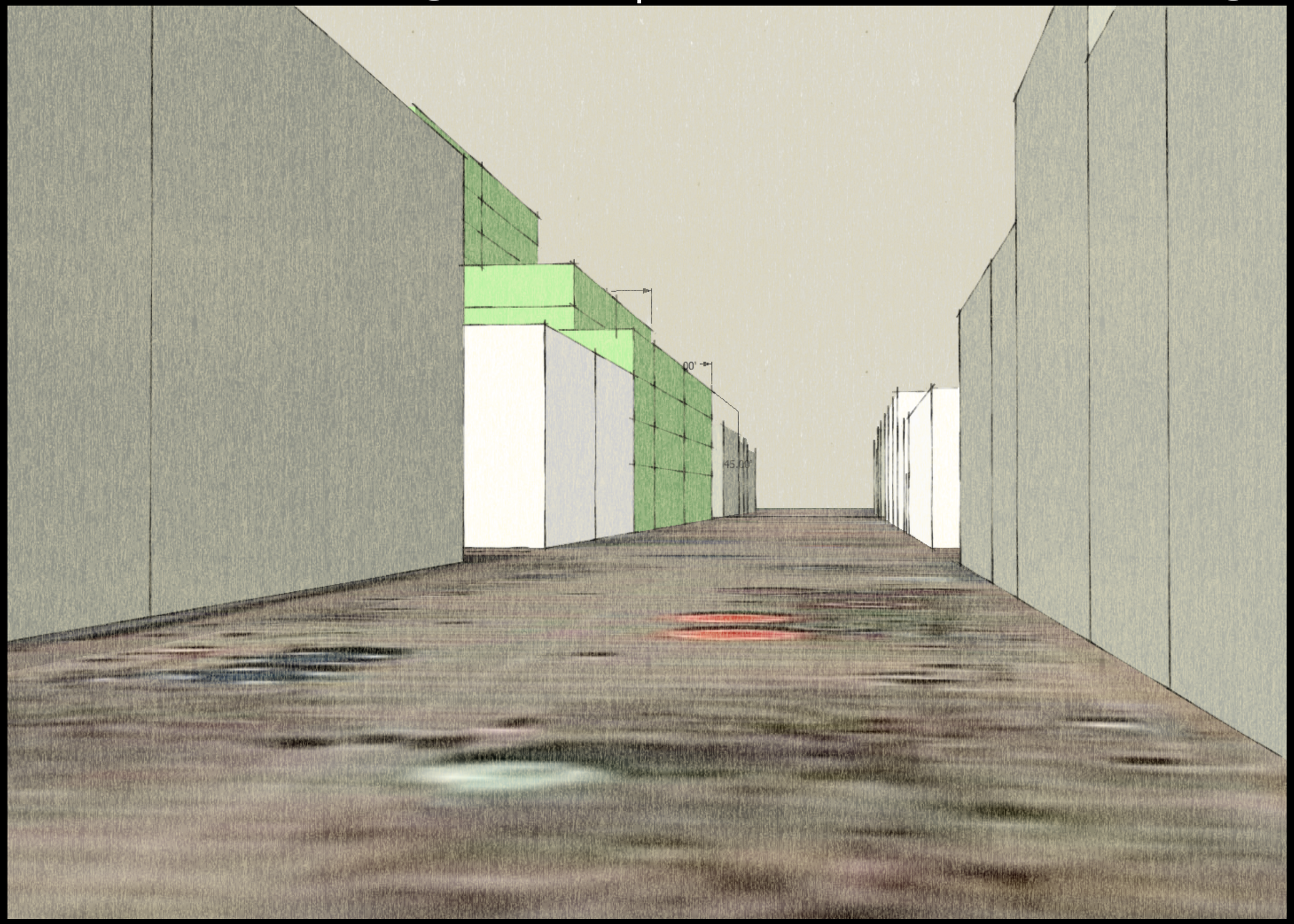

Eye level view looking north on Church St toward intersection of Bank

Sreet with buildings of varying heights

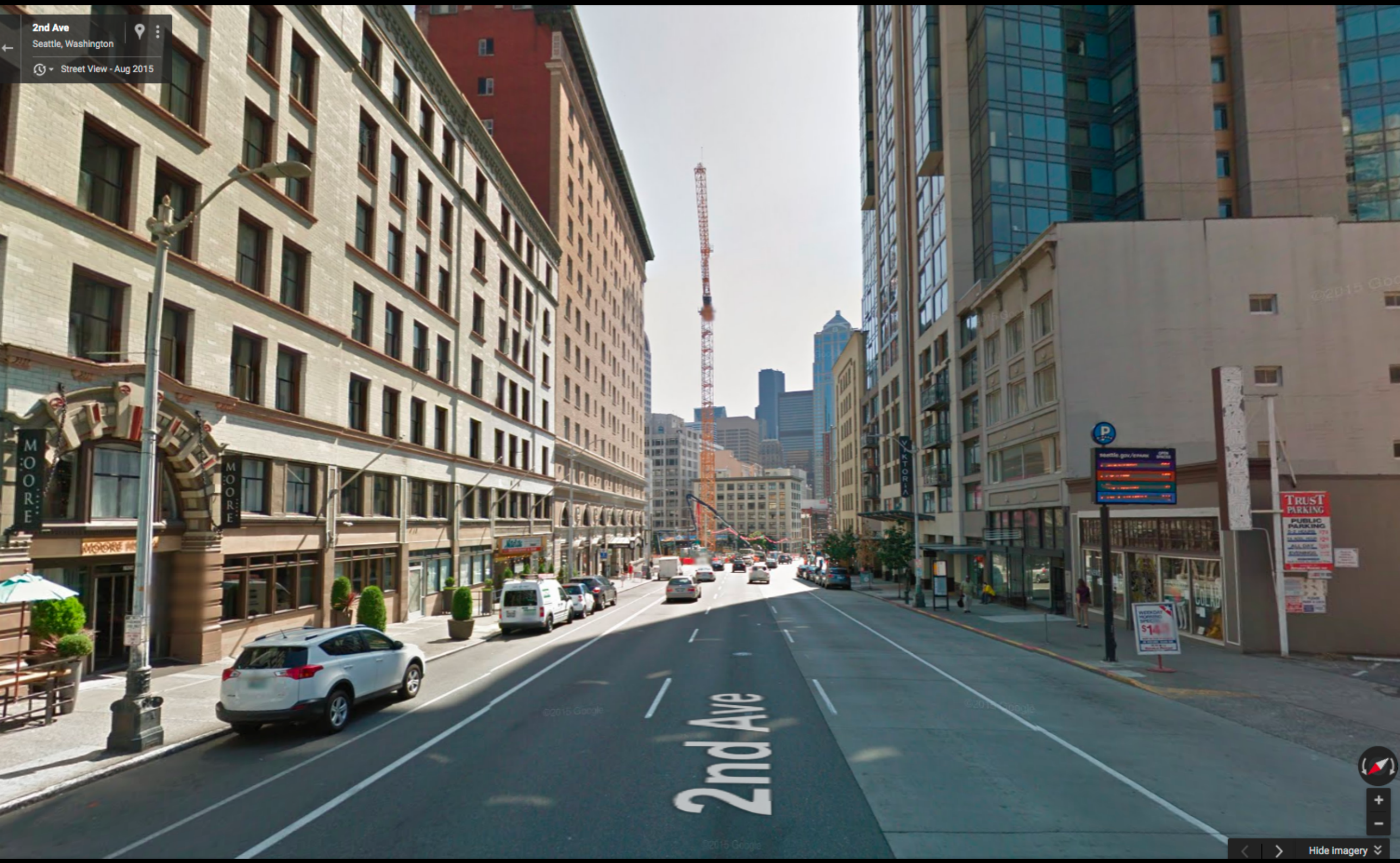

Street Activation

Traditional retail streets—frequent entrances, transparent facades

Traditional retail streets—frequent entrances, transparent facades

lack of entrances and retail along the primary street creates a dead street

frequent entrances combined with retail draws pedestrian activity

High quality building materials but lack of entrances and active uses on the street level

Active retail use at corner combined with setback ecourages sidewalk activity

Effect of building height on the street

Right-of-way narrower than Bank, Cherry and College. 10-story building on right

Frequent entrances and windows, active uses, tree canopy

17 story tower above an activated street (previous slide) barely perceptible from street

Facade articulation and street activation

Frequent entrances and windows, active ground floor uses, set back architectural bays

Multi-story tower above an activated street (previous slide) barely perceptible from street