Fee

$25.00

Department of Health and Safety

BUILDING PERMIT

Burlington, Vermont
Room 17, City Hall

3 - No. 1547

5/30

TEL. 864-4211
862-6082

PLEASE TYPE OR PRINT ALL INFORMATION

Date Apr. / 12 / 19 84 Zoning Permit #

Location 48 50 Greene St. Bob Lee

Owner Of Property Richard Lee Address Tel. 863-2561 - W - No.

Contractor Sunique Co. Tel. No.

Address No. St. City

ESTIMATED COST $ 5,000 Construction to be started Apr. 19 84

DESCRIPTION OF WORK **CODE IDENTIFICATION** 05

To ~~[illegible]~~ construct a fire escape (2nd means of egress) from grade to 3rd floor.

Plans submitted & discussed w/ J. Rosys. Copy attached.

CONDITIONS OF PERMIT

RJ 4/12/84

All construction to be completed in accordance with the Zoning Laws and Building Regulations of the City of Burlington and the State of Vermont, and conforming to the Regulations of the National Board of Fire Underwriters and any and all Federal Regulations now in effect.

☒ **Call for Rough Framing** Inspections

☐ **A Certificate of Occupancy is required before this structure is occupied**

John Rosys 4/12/84
BUILDING OFFICIAL DATE

Inspector's Copy

... of Health and Safety

BUILDING PERMIT

3 - No 1547

Burlington, Vermont
Room 17, City Hall

$25.00

TEL. 864-4211
862-6082

PLEASE TYPE OR PRINT ALL INFORMATION

Date Apr. / 12 / 1984 Zoning Permit #

Location 50 Greene St. Bob Lee

Owner Of Property Richard Lee Address Tel. 863-2561 - W - No.

Contractor Sunique Co. Tel. No.

Address No. St. City

ESTIMATED COST $5,000 Construction to be started Apr. 1984

DESCRIPTION OF WORK **CODE IDENTIFICATION** 0.5

To ~~[illegible]~~ construct a fire escape (2nd means of egress) from grade to 3rd floor.

Plans submitted & discussed w/ J. Rosys. Copy attached.

CONDITIONS OF PERMIT

RL 4/12/84

All construction to be completed in accordance with the Zoning Laws and Building Regulations of the City of Burlington and the State of Vermont, and conforming to the Regulations of the National Board of Fire Underwriters and any and all Federal Regulations now in effect.

☑ **Call for Rough Framing** Inspections

Certificate of Occupancy is required ...ore this structure is occupied

John Rosys 4/12/84
BUILDING OFFICIAL DATE

Office Copy P. Ross

THIS PERMIT GOES OUT WITH 1783 BOCA

50 GREEN ST., BURL.
ROBERT LEE 863-2561

Dept. of Public Health & Safety
RECEIVED
APR 9 1984
FILE:
ROUTING

SPECIFICATIONS

1. STAIRCASE AND DWELLING ACCESS TO MEET ALL TOWN & STATE BUILDING REQUIREMENTS INCLUDING, BUT NOT LIMITED TO THE FOLLOWING:

A. ACCESS TO THE FIRE ESCAPE WILL BE BY OUTSWINGING DOOR ✓

B. LUMBER TO BE NON-DETERIORATING PRESSURE TREATED WHAT KIND OF CONSTRUCTION IS THIS ~~BLDG~~

C. BOLTS, SUPPORTS AND SIMILAR DEVICES SHALL BE NON-CORRODING.

D. THE FIRE ESCAPE SHALL BE 24" IN WIDTH BETWEEN THE RAILS. STAIR TREAD WIDTH SHALL BE 30". ✓ LANDINGS 40" WIDE

E. STAIR RISERS SHALL ~~BE LESS THAN 9"~~ BE NO MORE THAN 8" HIGH AND STAIR TREADS SHALL BE ~~GREATER~~ LESS THAN ~~9"~~. 8"

F. ALL LANDINGS AND TREADS SHALL HAVE 2X4'S PLACED ON EDGE SPACED SUFFICIENTLY APPART TO REDUCE THE ACCUMULATION OF SNOW AND ICE. HOW?

G THE FIRE ESCAPE RAILINGS GUARDS & APPURTENANCES

SHALL BE CAPABLE OF MEETING PARA 1707.4 - FIRE ESCAPES SUB-PARA G. NAMELY THE FIRE ESCAPE SHALL BE CAPABLE OF SUSTAINING ALL LOADS SPECIFIED IN THAT PARAGRAPH. ✓ 100 LBS/SQ. FT.

H. GUARDS SHALL BE 43" IN HEIGHT MEASURED VERTICALLY FROM A POINT ON THE TREAD ONE INCH BACK FROM THE LEADING EDGE.

SPACING 2.

i. HANDRAILS SHALL BE 32" IN HEIGHT MEASURED SAME AS THE GUARD. ✓

J. GUARDS SHALL HAVE 2X2's PLACED 6" O.C. ALL AROUND EXCEPT WHERE THE BUILDING PROVIDES SUFFICIENT GUARDING.

OK
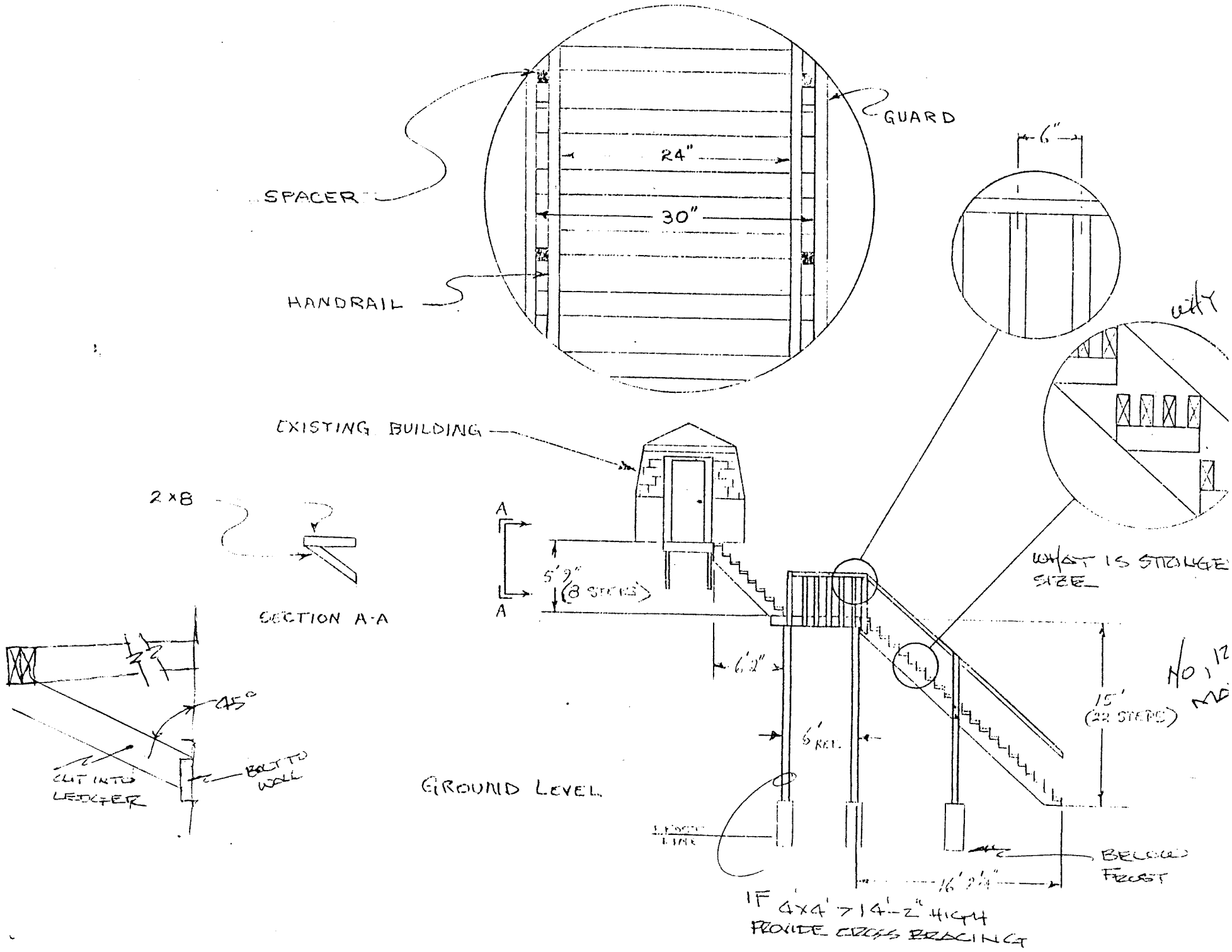
DO THE STAIRS GO BY ANY WINDOWS?