BRAD RABINOWITZ ARCHITECT

Architecture

Space Planning

Interior Design

RECEIVED
MAR 27 2015
DEPARTMENT OF
PLANNING & ZONING

JOB MEMO:	451 & 465 Appletree Point Road
RE:	DRB & DAB Application Submittal
DATE:	March 26, 2015
TO:	Scott Gustin, Burlington Planning and Zoning
FROM:	Brad Rabinowitz

The attached submittal is for a proposed new residential project at 451 Appletree Point Road. This is being submitted simultaneously with the application for 465 Appletree Point. The site plans and attachments are the same for both projects.

Attachments:

1. Completed and signed Zoning Permit Application and fee for $550 on 451 and $650 on 465.
2. Full size set of Drawings – at 24" x 36"
3. Reduced set of Drawings at 11"x17"
4. Information on the exterior lights. These are located on the plans.
5. Information on proposed windows including details and energy performance.

Project Description:
The application is for a duplex to be constructed at 451 Appletree Point Road. The previous approval for this property specified the setbacks and also that the new building footprint could not exceed the existing footprint.
The proposed building meets those restrictions.
The project is proposed as a duplex and provides 4 parking spaces.
This submittal includes a lot line adjustment between 451 and 465 to increase the size of 465 to meet the requirements for a duplex in this "Large Lot Overlay District".

Note that photos of the existing site are included on the Landscape Drawing as well as in the rendered views from the lake.

Major Impact Review:
Even though both projects are for small residential projects on single lots, as duplexes on the lake they are required to go before the NPA as part of the review. This was presented on March 25th to the NPA.

200 Main Street
Burlington, Vermont 05401
(802) 658-0430, Fax (802) 863-6876
www.bradrabinowitzarchitect.com

State Shoreland Permit:
A state permit application has been prepared and reviewed with the Lakes and Ponds Division and the State's criteria have been addressed. However, as the Shoreland review may be transferred to the City of Burlington, that application is on hold pending that clarification.

Site Plan/Design:
In addition to addressing the setbacks as noted, the application addresses the existing shoreland. As shown on the Landscape Plan, damaged and fallen trees are removed. The bank is repaired in the area of the removal of the existing house.
Erosion control measures are noted on the engineering site plans. The engineer will be reviewing this with DPW regarding stormwater.

RECEIVED
MAR 27 2015
DEPARTMENT OF
PLANNING & ZONING

cc Al, Cheryl & Nicole Senecal
Scott Homestead
Cynthia Knauf

Senecal Residence
451 & 465 Appletree Point, Burlington, VT
Lighting Schedule

L1 Teka LED Post

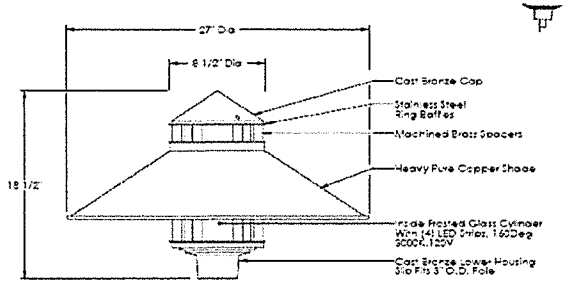

L2 Teka Bollard

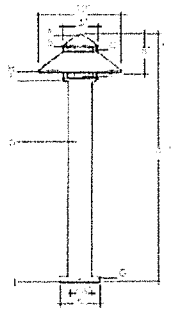

L3 Teka Beacon Wall

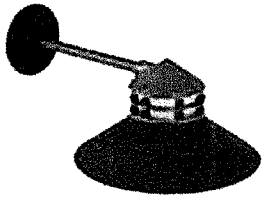

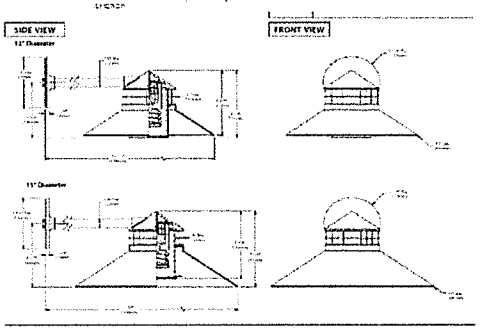

RECEIVED
MAR 27 2015
DEPARTMENT OF
PLANNING & ZONING

Senecal Residence
451 & 465 Appletree Point, Burlington, VT
Lighting Schedule

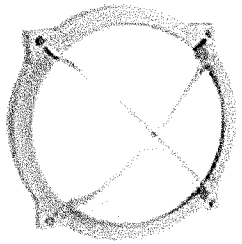

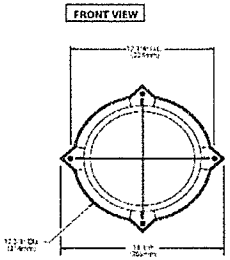

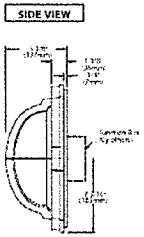

L4 Teka Surface LED

RECEIVED
MAR 27 2015
DEPARTMENT OF
PLANNING & ZONING

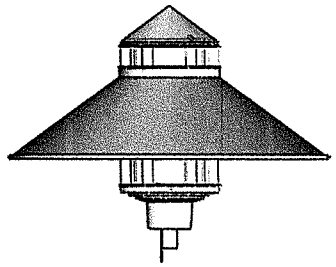

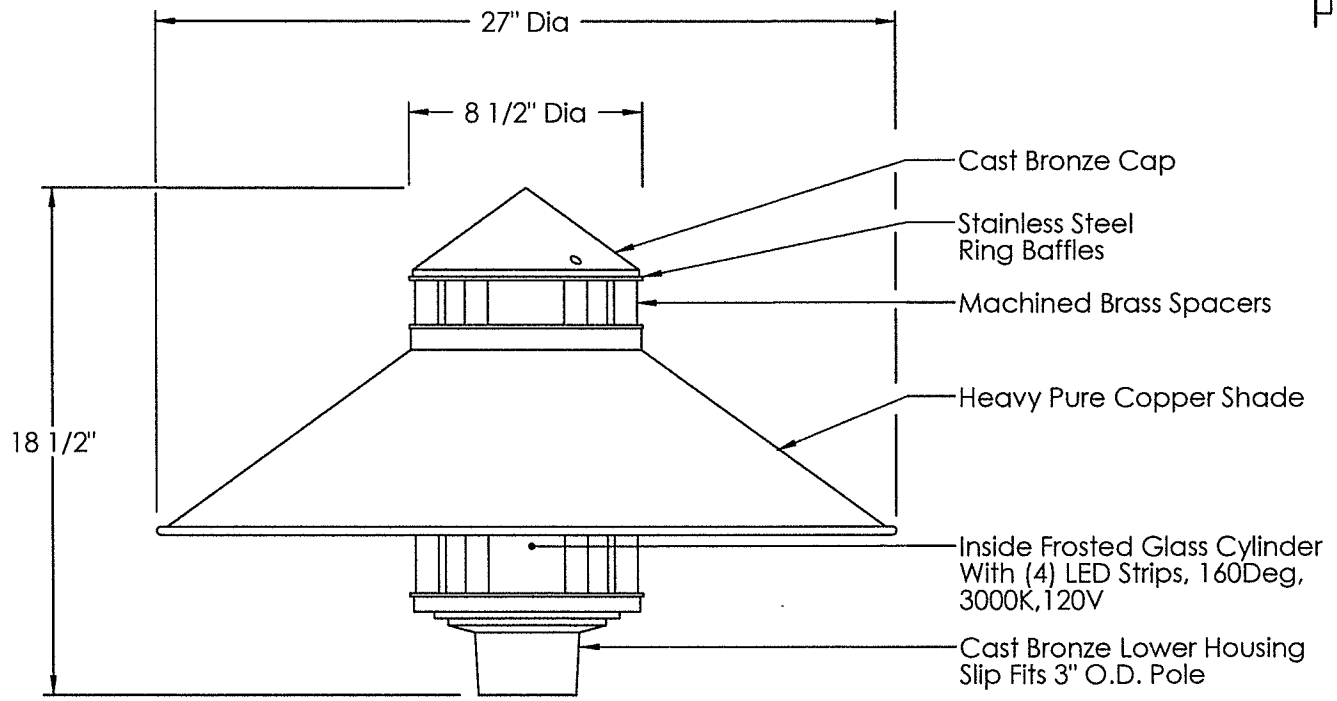

RECEIVED
MAR 27 2015
DEPARTMENT OF
PLANNING & ZONING

Provide 12V A.C. Power
to Fixture

THIS DOCUMENT CONTAINS PROPRIETARY INFORMATION OF B-K LIGHTING AND ITS RECEIPT OR POSSESSION DOES NOT CONVEY ANY RIGHTS TO REPRODUCE, DISCLOSE ITS CONTENTS, OR TO MANUFACTURE, USE OR SELL ANYTHING IT MAY DESCRIBE. REPRODUCTION, DISCLOSURE OR USE WITHOUT SPECIFIC WRITTEN AUTHORIZATION OF B-K LIGHTING IS STRICTLY FORBIDDEN.

c UL us

LBP-2346 WITH LED STRIPS

4/6/09	TEKA ILLUMINATION INC.	DRAWING NUMBER CUS-1943-86

TEKA
ILLUMINATION

T-57
Beacon Shaded Bollard

RECEIVED
MAR 27 2015
DEPARTMENT OF
PLANNING & ZONING

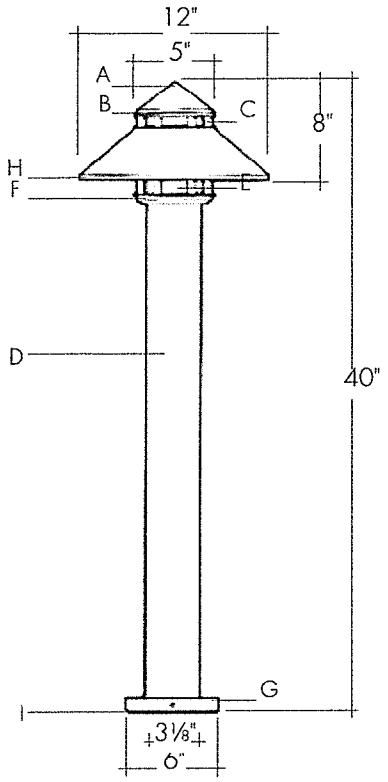

Description
Exterior bollard luminaire.

Materials and Construction
A. Cast bronze cap
B. Stainless steel or copper on stainless steel Ring baffles
C. Machined, solid brass spacers
D. Heavy wall, .125 thk. solid copper post, 3.5" O.D.
E. Etched glass cylinder
F. Cast bronze housing
G. Cast bronze base
H. Solid copper, heavy wall shade
I. Stainless steel and cast bronze anchor plate
J. Provided with all stainless steel fasteners
K. 120V electronic PLT ballast with -15°F
starting temperature is standard on PLC models

Mounting
TEKA mounting kit #34 provided. Allows for (2) ¾" maximum trade conduits.

Product Number	Lamp	Rings	Finish Option
BSB-2546 / Natural	60W A-19	St. Stl.	Brown Patina
BSB-2516/ Natural	60W A-19	Copper	Brown Patina
BSB-2542 / Natural	26W PLT	St. Stl.	Brown Patina
BSB-2512/ Natural	26W PLT	Copper	Brown Patina

Options available at additional cost
1. Add suffix BP for brown patina
2. Add suffix # 277 to PLT models for integral 277V electronic ballast
3. For higher or lower heights available, consult factory

Note
ETL Listed to ANSI/UL Standard 1598 and Certified to CAN/CSA Standard C22.2 No. 250

TEKA ILLUMINATION, INC
40429 Brickyard Drive Madera, California 93636 (559) 438-5800 Fax (559) 438-5900 www.tekaillumination.com

© Copyright TEKA 2004

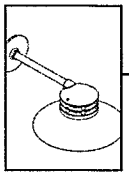

BEACON WALL MOUNT (BWM)

Compact Fluorescent

PROJECT:	
TYPE:	
CATALOG NUMBER:	
SOURCE:	
NOTES:	

RECEIVED
MAR 27 2015
DEPARTMENT OF
PLANNING & ZONING

CATALOG NUMBER LOGIC

	BWM		CF				120	
Example:	BWM -	12 -	CF -	353 -	C -	BP -	120 -	DT

Series
- **BWM** - Beacon Wall Mount

Shade Size
- **12** - 12 Inch
- **15** - 15 Inch

Source
- **CF** - Compact Fluorescent

Lamp
- **0** - By Others
- **353** - CF13W/GU24/2700K (13W)
- **354** - CF13W/GU24/4100K (13W)
- **355** - CT18W/GU24/2700K (18W)
- **356** - CT18W/GU24/4100K (18W)
- **357** - CT26W/GU24/2700K (26W)
- **358** - CT26W/GU24/4100K (26W)

Ring Stack
- **C** - Copper
- **S** - Stainless Steel*

Finish
- **NAT** - Natural
- **BP** - Brown Patina*
- **NIC** - Nickel Plate*
- **BZW** - Bronze Wrinkle Powder Coat *(See Powder Coat Finish Chart for Available Choices.)*

**Stainless Steel Rings are provided in Natural (NAT) regardless of finish choice.*

Standard Finish

Powder Coat Color	Satin	Wrinkle
Bronze	BZP	BZW
Black	BLP	BLW
White (Gloss)	WHP	WHW
Aluminum	SAP	—
Verde	—	VER

Premium Finish

ABP	Antique Brass Powder	HUG	Hunter Green
AMG	Aleutian Mountain Granite	MDS	Mojave Desert Sandstone
AQW	Antique White	NBP	Natural Brass Powder
BCM	Black Chrome	OCP	Old Copper
BGE	Beige	RMG	Rocky Mountain Granite
BPP	Brown Patina Powder	SDS	Sonoran Desert Sandstone
CAP	Clear Anodized Powder	SMG	Sierra Mountain Granite
CMG	Cascade Mountain Granite	TXF	Textured Forest
CRI	Cracked Ice	WCP	Weathered Copper
CRM	Cream	WIR	Weathered Iron

Voltage
- **120** - 120 VAC Input

Option
- **CLR** - Clear Coat Protection *(For use with Natural (NAT) Finishes)*
- **MESH** - Mesh Screen *(Finish to match fixture)*
- **DT** - Dark Top *(Eliminates glow in window above shade. Finish to match fixture)*

LAMP DATA

Lamp #	Watts	Description	Rated Life	Initial Lumens	Design Lumens	CRI	CCT(K)
353	13	CF13W/GU24/2700K	10,000	900	900	82	2,700
354	13	CF13W/GU24/4100K	10,000	900	900	82	4,100
355	18	CF18W/GU24/2700K	10,000	1,250	1,250	82	2,700
356	18	CF18W/GU24/4100K	10,000	1,250	1,250	82	4,100
357	26	CF26W/GU24/2700K	10,000	1,250	1,250	82	2,700
358	26	CF26W/GU24/4100K	10,000	1,250	1,250	82	4,100

TEKA ILLUMINATION
40429 Brickyard Drive • Madera, CA 93636 • USA
559.438.5800 • FAX 559.438.5900
www.tekaillumination.com • info@tekaillumination.com

SUBMITTAL DATE	DRAWING NUMBER
3-6-13	SUB-2015-00

THIS DOCUMENT CONTAINS PROPRIETARY INFORMATION OF TEKA ILLUMINATION AND ITS RECEIPT OR POSSESSION DOES NOT CONVEY ANY RIGHTS TO REPRODUCE, DISCLOSE ITS CONTENTS, OR TO MANUFACTURE, USE OR SELL ANYTHING IT MAY DESCRIBE. REPRODUCTION, DISCLOSURE OR USE WITHOUT SPECIFIC WRITTEN AUTHORIZATION OF TEKA ILLUMINATION IS STRICTLY FORBIDDEN.

BEACON WALL MOUNT (BWM)

Compact Fluorescent

PROJECT:	
TYPE:	

RECEIVED
MAR 27 2015
DEPARTMENT OF
PLANNING & ZONING

SIDE VIEW

12" Diameter

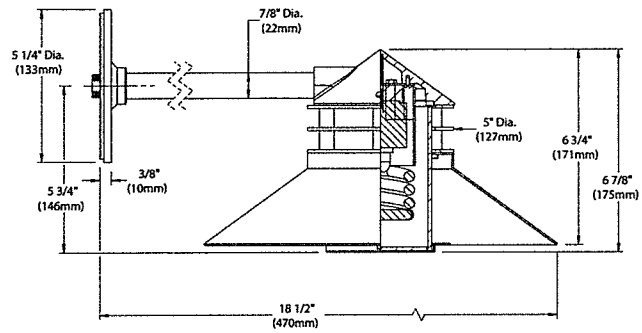

FRONT VIEW

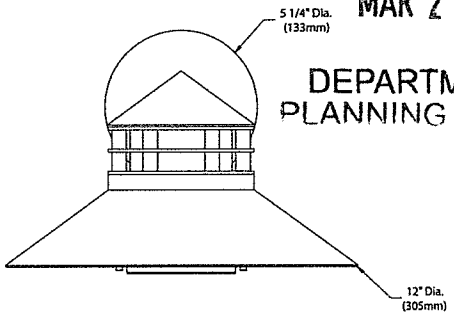

15" Diameter

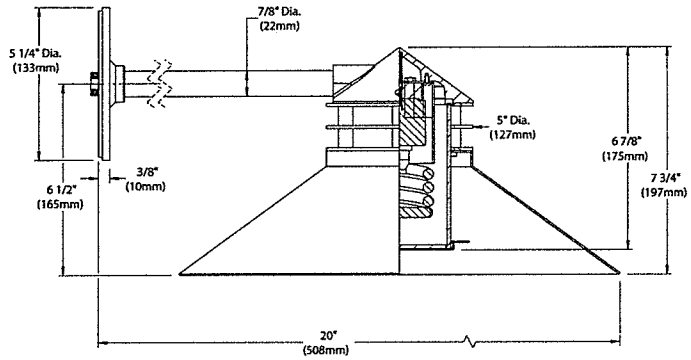

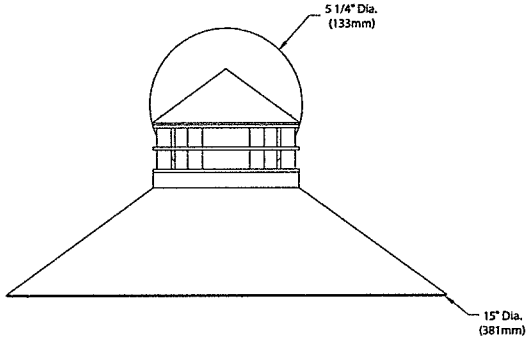

SPECIFICATIONS

GreenSource Initiative™
Metal and packaging components are made from recycled materials. Manufactured using renewable solar energy, produced onsite. Returnable to manufacturer at end of life to ensure cradle-to-cradle handling. Packaging contains no chlorofluorocarbons (CFC's). Use of this product may qualify for GreenSource efficacy and recycling rebate(s). Consult www.tekaillumination.com/greensource for program requirements.

Enduring Metals
Constructed from copper, bronze, and stainless steel. These lifetime materials are inherently corrosion resistant. Factory-applied finishes are also available.

Installation
5" diameter, machined aluminum mounting plate with textured black finish. For use with 4" octagonal junction box (by others). Supplied with [2] tamper-resistant, black oxide stainless steel mounting screws.

Canopy
5-1/4" diameter canopy conceals mounting plate and hardware. Hand spun from high purity, solid copper plate with tamper resistant, machined brass lock collar.

Shade
Hand spun from high purity, solid copper plate. Specify 12" or 15" diameter.

Lens
3-5/8" dia. translucent acrylic lens with clear acrylic downlight lens provides sealed optical compartment.

Stem
Machined from heavy wall 7/8" O.D. brass.

Body
Cast bronze. High temperature, silicone 'O' Ring provides water tight seal to shade assembly.

Lamp Holder
Specification grade, ceramic body holder for GU24 lamp base. Nickel alloy contacts and heat resistant, spring loaded, stainless steel retaining clips

Lamp
For use with self ballasted 2 pin GU24 twist and lock compact fluorescent lamp.

Ring Stack
Solid copper or stainless steel accent rings with solid brass spacers.

Wiring
Teflon* coated wire, 18AWG, 600V, 250° C rated and certified to UL 1659 standard.

Hardware
Tamper-resistant, stainless steel hardware.

Finish
Natural (NAT): Copper and bronze components are sand blasted to expose the porous metal surface. Over time, and with exposure to the elements, the metals will naturally 'weather' resulting in a unique patina.

Factory Applied: Hand-crafted metal finishes include natural (NAT), brown patina (BP), and nickel plate (NIC).

Powder Coat: Class 'A' TGIC polyester powder coating. RoHS compliant.

Clear Coat Protection
Optional ceramic clear coating seals and protects underlying metals and protects against discoloration, fading, and wear. Highly impervious to chemicals, solvents, and graffiti. For use with natural (NAT) finishes.

Warranty
5 year limited warranty.

Listings
ETL Listed to ANSI/UL Standard 1598 and Certified to CAN/CSA Standard C22.2 No. 250. RoHS compliant. Made in USA.

RoHS

**Teflon is a registered trademark of DuPont Corporation.*

TEKA ILLUMINATION
40429 Brickyard Drive • Madera, CA 93636 • USA
559.438.5800 • FAX 559.438.5900
www.tekaillumination.com • info@tekaillumination.com

SUBMITTAL DATE	DRAWING NUMBER
3-6-13	SUB-2015-00

THE ARCADE SERIES

BISSL SOLID STATE LIGHTING

SUNDIAL SURFACE MOUNT (SM)

PROJECT:	
TYPE:	
CATALOG NUMBER:	
SOURCE:	
NOTES:	

RECEIVED
MAR 27 2015
DEPARTMENT OF PLANNING & ZONING

CATALOG NUMBER LOGIC

AR	SM	12	LED							

Example: AR - SM - 12 - LED - 322 - NAT - WHT - S - NAT - 120 -

Series
- **AR** - Arcade Series

Style
- **SM** - Sundial Surface Mount

Size
- **12** - 12 Inch

Source
- **LED** - Solid State System with Integral Driver

Lamp
- **322** - 2x4WLED/3000K (8W)
- **323** - 2x4WLED/4100K (8W)

Finish
- **NAT** - Natural
- **BP** - Brown Patina
- **NIC** - Nickel Plate
- **BZW** - Bronze Wrinkle Powder Coat*
  - ** (See Powder Coat Finish Chart for Available Choices)*

Powder Coat Color	Satin	Wrinkle
Bronze	BZP	BZW
Black	BLP	BLW
White (Gloss)	WHP	WHW
Aluminum	SAP	—
Verde	—	VER

Also available in Premium Finishes See submittal SUB-1439-00 for Premium Finishes

Diffuser
- **WHT** - Translucent White
- **ALB** - White Alabaster
- **ROS** - Rose Alabaster
- **HRN** - Natural Horn
- **CAR** - Carmel

Stainless Steel Rings & Finish
- **S** - Stainless Steel

- **NAT** - Natural
- **POL** - Polished
- **BZW** - Bronze Wrinkle Powder Coat*
  - ** (See Powder Coat Finish Chart for Available Choices)*

Copper Rings & Finish
- **C** - Copper

- **NAT** - Natural
- **BP** - Brown Patina
- **POL** - Polished

Voltage
- **120** - 120V

Option
- **CLR** - Clear Coat Protection

SOLID STATE DATA

Lamp #	Watts	Description	Rated Life (Hrs) 70% of initial lumens (L_{70})	Design Lumens	CCT(K)
322	8	2x4WLED/3000K	50,000	352	3,000
323	8	2x4WLED/4100K	50,000	416	4,100

TEKA ILLUMINATION	40429 Brickyard Drive • Madera, CA 93636 • USA 559.438.5800 • FAX 559.438.5900 www.tekaillumination.com • info@tekaillumination.com	SUBMITTAL DATE 10-5-11	DRAWING NUMBER S001063

THIS DOCUMENT CONTAINS PROPRIETARY INFORMATION OF TEKA ILLUMINATION AND ITS RECEIPT OR POSSESSION DOES NOT CONVEY ANY RIGHTS TO REPRODUCE, DISCLOSE ITS CONTENTS, OR TO MANUFACTURE, USE OR SELL ANYTHING IT MAY DESCRIBE. REPRODUCTION, DISCLOSURE OR USE WITHOUT SPECIFIC WRITTEN AUTHORIZATION OF TEKA ILLUMINATION IS STRICTLY FORBIDDEN.

THE ARCADE SERIES

BKSSL SOLID STATE LIGHTING

SUNDIAL SURFACE MOUNT (SM)

PROJECT:	
TYPE:	

RECEIVED
MAR 27 2015
DEPARTMENT OF PLANNING & ZONING

FRONT VIEW

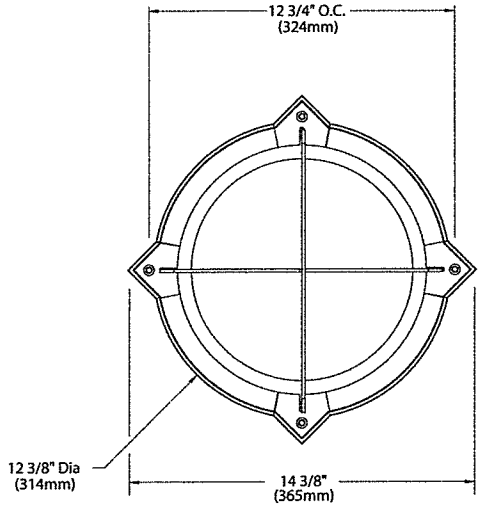

SIDE VIEW

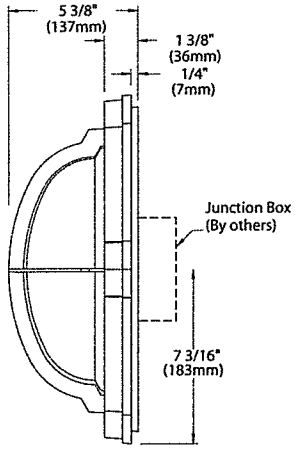

SPECIFICATIONS

GreenSource Initiative™
Our GreenSource Initiative™ guides the design and manufacturing of this product. All metal and packaging materials are derived from recycled materials, which are also recyclable. Our packaging contains no chlorofluorocarbons (CFC's). Our finishing is RoHS compliant. This product is manufactured using renewable solar energy, which is produced onsite and is returnable at end of life to ensure cradle-to-cradle handling.

Enduring Metals
Constructed from copper, bronze, and stainless steel. These lifetime materials are inherently corrosion resistant. Factory-applied finishes are also available.

Body
Cast from solid, copper-free aluminum. Fully gasketed, and mounts to a recessed 4" octagonal junction box.

Faceplate
Cast bronze faceplate with stainless steel fasteners.

Rings
Solid copper or stainless steel accent rings.

Source
LED features BKSSL™ technology (50,000 Hr. Life), and includes an integral driver with primary overload and short circuit protection. 120V input. Two (2) 4 W LED's for a total of 8W. Available in 3000K and 4100K.

Transformer
Includes a 12 VAC BKSSL transformer.

Diffuser
One of 5 standard molded, etched acrylic translucent diffusers for high transmittance and long life.

Wiring
Teflon* coated wire, 18AWG, 600V, 250° C rated and certified to UL 1659 standard.

Hardware
Tamper-resistant, stainless steel hardware.

Finish
Natural (NAT): Copper and bronze components are sand blasted to expose the porous metal surface. Over time, and with exposure to the elements, the metals will naturally 'weather' resulting in a unique patina.

Factory Applied: Hand-crafted metal finishes include brown patina (BP), polish (POL), and nickel plate (NIC).

Powder Coat: Class 'A' TGIC polyester powder coating. RoHS compliant.

Clear Coat Protection
Optional ceramic clear coating seals and protects underlying metals and protects against discoloration, fading, and wear. Highly impervious to chemicals, solvents, and graffiti. For use with natural (NAT) and polish (POL) finishes.

Warranty
5 year limited warranty.

Listings
ETL Listed to ANSI/UL Standard 1598 and Certified to CAN/CSA Standard C22.2 No. 250. Made in USA.

Teflon is a registered trademark of DuPont Corporation.

TEKA ILLUMINATION	40429 Brickyard Drive • Madera, CA 93636 • USA 559.438.5800 • FAX 559.438.5900 www.tekaillumination.com • info@tekaillumination.com	SUBMITTAL DATE 10-5-11	DRAWING NUMBER S001063

RECEIVED
MAR 27 2015
DEPARTMENT OF
PLANNING & ZONING

Integrity Windows and Doors NFRC Values

Integrity from MARVIN Windows and Doors

Wood–Ultrex Double Hung – Standard Glass

Glass Description	Divider	U Factor	SHGC	VT	CR	Energy Star	Canada Energy Star
11/16" IG Obscure Argon LoE 180 3.1 mm obscure / 11.5mm argon / LoE 180 3.1 mm	SDLS < 1 "	0.30	0.46	0.53	55	N	A, B, C
11/16" IG Obscure Air LoE 180 3.1 mm obscure / 11.5mm air / LoE 180 3.1 mm	SDLS < 1 "	0.33	0.46	0.53	52		A, B
11/16" IG LoE 366 Argon Obscure 3.1 mm LoE 366 / 11.5mm argon / 3.1 mm obscure		0.28	0.21	0.49	56	N, NC, SC, S	A
	SDLS < 1 "	0.29	0.19	0.43	56	N, NC, SC, S	
	SDLN < 1 "	0.28	0.19	0.43	56	N, NC, SC, S	A
	GBG	0.28	0.19	0.43	56	N, NC, SC, S	A
11/16" IG LoE 366 Argon 3.1 mm LoE 366 / 11.5mm argon / 3.1 mm clr		0.28	0.21	0.49	56	N, NC, SC, S	A
	SDLS < 1 "	0.29	0.19	0.43	56	N, NC, SC, S	
	SDLN < 1 "	0.28	0.19	0.43	56	N, NC, SC, S	A
	GBG	0.28	0.19	0.43	56	N, NC, SC, S	A
11/16" IG LoE 366 Air Obscure 3.1 mm LoE 366 / 11.5mm air / 3.1 mm obscure		0.32	0.21	0.49	53	NC, SC, S	
	SDLS < 1 "	0.33	0.19	0.43	53	SC, S	
	SDLN < 1 "	0.32	0.19	0.43	53	NC, SC, S	
	GBG	0.32	0.19	0.43	53	NC, SC, S	
11/16" IG LoE 366 Air 3.1 mm LoE 366 / 11.5mm air / 3.1 mm clr		0.32	0.21	0.49	53	NC, SC, S	
	SDLS < 1 "	0.33	0.19	0.43	53	SC, S	
	SDLN < 1 "	0.32	0.19	0.43	53	NC, SC, S	
	GBG	0.32	0.19	0.43	53	NC, SC, S	
11/16" IG LoE 272 Argon Obscure 3.1 mm LoE 272 / 11.5mm argon / 3.1 mm obscure		0.29	0.32	0.54	55	N, NC	A
	SDLS < 1 "	0.29	0.28	0.48	56	N, NC, SC	A
	SDLN < 1 "	0.29	0.28	0.48	55	N, NC, SC	A
	GBG	0.29	0.28	0.48	55	N, NC, SC	A
11/16" IG LoE 272 Argon 3.1 mm LoE 272 / 11.5mm argon / 3.1 mm clr		0.29	0.32	0.54	55	N, NC	A
	SDLS < 1 "	0.29	0.28	0.48	56	N, NC, SC	A
	SDLN < 1 "	0.29	0.28	0.48	55	N, NC, SC	A
	GBG	0.29	0.28	0.48	55	N, NC, SC	A
11/16" IG LoE 272 Air Obscure 3.1 mm LoE 272 / 11.5mm air / 3.1 mm obscure		0.33	0.32	0.54	52		
	SDLS < 1 "	0.32	0.29	0.48	52	NC, SC	A
	SDLN < 1 "	0.33	0.29	0.48	52	SC	
	GBG	0.33	0.29	0.48	52	SC	
11/16" IG LoE 272 Air 3.1 mm LoE 272 / 11.5mm air / 3.1 mm clr		0.33	0.32	0.54	52		
	SDLS < 1 "	0.32	0.29	0.48	52	NC, SC	A
	SDLN < 1 "	0.33	0.29	0.48	52	SC	
	GBG	0.33	0.29	0.48	52	SC	
11/16" IG Argon LoE 180 3.1 mm clr / 11.5mm argon / LoE 180 3.1 mm		0.31	0.53	0.59	54	N	A, B, C
	SDLS < 1 "	0.30	0.46	0.53	55	N	A, B, C
	SDLN < 1 "	0.31	0.47	0.53	54	N	A, B
	GBG	0.31	0.47	0.53	54	N	A, B
11/16" IG Air LoE 180 3.1 mm clr / 11.5mm air / LoE 180 3.1 mm		0.34	0.53	0.59	51		A, B
	SDLS < 1 "	0.33	0.46	0.53	52		A, B
	SDLN < 1 "	0.34	0.47	0.53	51		A
	GBG	0.34	0.47	0.53	51		A

RECEIVED
MAR 27 2015
DEPARTMENT OF
PLANNING & ZONING

Integrity from MARVIN Windows and Doors

Integrity Windows and Doors NFRC Values

Wood–Ultrex Awning Operator/Stationary – Standard Glass

Glass Description	Divider	U Factor	SHGC	VT	CR	Energy Star	Canada Energy Star
1 1/8" Tri-Pane LoE 272 Air LoE 180 3.1 mm LoE 272 / 9.8mm air / 3.1 mm clr / 9.8mm air / LoE 180 3.1 mm		0.23	0.27	0.45	65	N, NC, SC, S	A, B, C
	SDLS < 1 "	0.23	0.25	0.41	65	N, NC, SC, S	A, B, C
	SDLS > 1 "	0.23	0.23	0.37	65	N, NC, SC, S	A, B, C
	SDLN < 1 "	0.23	0.25	0.41	65	N, NC, SC, S	A, B, C
	SDLN > 1 "	0.23	0.23	0.37	65	N, NC, SC, S	A, B, C
	GBG	0.23	0.25	0.41	65	N, NC, SC, S	A, B, C
1 1/8" Tri-Pane LoE 272 Argon LoE 180 3.1 mm LoE 272 / 9.8mm argon / 3.1 mm clr / 9.8mm argon / LoE180 3.1 mm		0.20	0.27	0.45	69	N, NC, SC, S	A, B, C, D
	SDLS < 1 "	0.20	0.25	0.41	69	N, NC, SC, S	A, B, C, D
	SDLS > 1 "	0.20	0.23	0.37	69	N, NC, SC, S	A, B, C, D
	SDLN < 1 "	0.20	0.25	0.41	69	N, NC, SC, S	A, B, C, D
	SDLN > 1 "	0.20	0.23	0.37	69	N, NC, SC, S	A, B, C, D
	GBG	0.20	0.25	0.41	69	N, NC, SC, S	A, B, C, D
1 1/8" Tri-Pane LoE 272 Argon Obscure LoE 180 3.1 mm LoE 272 / 9.8mm argon / 3.1 mm obscure / 9.8mm argon / LoE180 3.1 mm		0.20	0.27	0.45	69	N, NC, SC, S	A, B, C, D
	SDLN < 1 "	0.20	0.25	0.41	69	N, NC, SC, S	A, B, C, D
	SDLN > 1 "	0.20	0.23	0.37	69	N, NC, SC, S	A, B, C, D
	SDLS > 1 "	0.20	0.23	0.37	69	N, NC, SC, S	A, B, C, D
	SDLS < 1 "	0.20	0.25	0.41	69	N, NC, SC, S	A, B, C, D
	GBG	0.20	0.25	0.41	69	N, NC, SC, S	A, B, C, D
11/16" IG Air LoE 180 3.1 mm clr / 11.5mm air / LoE 180 3.1 mm		0.33	0.50	0.56	52		A, B
	SDLN > 1 "	0.32	0.41	0.46	53	N	A
	SDLN < 1 "	0.33	0.45	0.51	52		A
	SDLS > 1 "	0.32	0.41	0.46	53	N	A
	SDLS < 1 "	0.32	0.45	0.51	53	N	A, B
	GBG	0.33	0.45	0.51	52		A
11/16" IG Air LoE 180 3.1 mm clr / 9.8mm air / LoE 180 4.7mm		0.33	0.49	0.56	51		A, B
	SDLS < 1 "	0.33	0.44	0.51	51		A
	SDLS > 1 "	0.33	0.40	0.46	51		A
	SDLN < 1 "	0.33	0.44	0.51	51		A
	SDLN > 1 "	0.33	0.40	0.46	51		A
	GBG	0.34	0.44	0.51	50		A
11/16" IG Argon LoE 180 3.1 mm clr / 9.8mm argon / LoE 180 4.7mm		0.30	0.49	0.56	54	N	A, B, C
	SDLS < 1 "	0.30	0.45	0.51	54	N	A, B
	SDLS > 1 "	0.30	0.40	0.46	54	N, NC	A, B
	SDLN < 1 "	0.30	0.45	0.51	54	N	A, B
	SDLN > 1 "	0.30	0.40	0.46	54	N, NC	A, B
	GBG	0.30	0.45	0.51	54	N	A, B
11/16" IG Argon LoE 180 3.1 mm clr / 11.5mm argon / LoE 180 3.1 mm		0.30	0.50	0.56	55	N	A, B, C
	SDLS < 1 "	0.29	0.45	0.51	56	N	A, B, C
	SDLS > 1 "	0.29	0.41	0.46	56	N	A, B
	SDLN < 1 "	0.30	0.46	0.51	55	N	A, B
	SDLN > 1 "	0.29	0.41	0.46	56	N	A, B
	GBG	0.30	0.46	0.51	55	N	A, B
11/16" IG LoE 272 Air 3.1 mm LoE 272 / 11.5mm air / 3.1 mm clr		0.32	0.30	0.51	53	NC, SC	A
	SDLS > 1 "	0.32	0.25	0.42	53	NC, SC, S	A
	SDLS < 1 "	0.32	0.28	0.46	53	NC, SC	A
	SDLN > 1 "	0.32	0.25	0.42	53	NC, SC, S	A
	SDLN < 1 "	0.32	0.28	0.46	53	NC, SC	A
	GBG	0.32	0.28	0.46	53	NC, SC	A
11/16" IG LoE 272 Air 3.1 mm LoE 272 / 9.8mm air / 4.7mm clr		0.33	0.30	0.51	51	SC	
	SDLS < 1 "	0.33	0.28	0.46	51	SC	
	SDLS > 1 "	0.33	0.25	0.41	51	SC, S	
	SDLN > 1 "	0.33	0.25	0.41	51	SC, S	
	SDLN < 1 "	0.33	0.28	0.46	51	SC	
	GBG	0.34	0.28	0.46	51	SC	
11/16" IG LoE 272 Argon 3.1 mm LoE 272 9.8mm argon / 4.7mm clr		0.29	0.30	0.51	55	N, NC, SC	A
	SDLS > 1 "	0.29	0.25	0.41	55	N, NC, SC, S	A
	SDLS < 1 "	0.29	0.27	0.46	55	N, NC, SC, S	A
	SDLN > 1 "	0.29	0.25	0.41	55	N, NC, SC, S	A
	SDLN < 1 "	0.29	0.27	0.46	55	N, NC, SC, S	A
	GBG	0.29	0.27	0.46	55	N, NC, SC, S	A

Integrity Windows and Doors NFRC Values

Wood–Ultrex Awning Operator/Stationary – Standard Glass

Glass Description	Divider	U Factor	SHGC	VT	CR	Energy Star	Canada Energy Star
11/16" IG LoE 272 Argon 3.1 mm LoE 272 / 11.5mm argon / 3.1 mm clr		0.28	0.30	0.51	57	N, NC, SC	A, B
	SDLS > 1 "	0.28	0.25	0.42	57	N, NC, SC, S	A, B
	SDLS < 1 "	0.28	0.27	0.46	57	N, NC, SC, S	A, B
	SDLN < 1 "	0.28	0.27	0.46	57	N, NC, SC, S	A, B
	SDLN > 1 "	0.28	0.25	0.42	57	N, NC, SC, S	A, B
	GBG	0.28	0.27	0.46	57	N, NC, SC, S	A, B
11/16" IG LoE 366 Air 3.1 mm LoE 366 / 9.8mm air / 4.7mm clr		0.32	0.21	0.46	51	NC, SC, S	
	SDLN > 1 "	0.32	0.17	0.37	51	NC, SC, S	
	SDLN < 1 "	0.32	0.19	0.41	51	NC, SC, S	
	SDLS > 1 "	0.32	0.17	0.37	51	NC, SC, S	
	SDLS < 1 "	0.32	0.19	0.41	51	NC, SC, S	
	GBG	0.33	0.19	0.41	51	SC, S	
11/16" IG LoE 366 Air 3.1 mm LoE 366 / 11.5mm air / 3.1 mm clr		0.31	0.20	0.46	53	NC, SC, S	
	SDLS < 1 "	0.32	0.19	0.42	53	NC, SC, S	
	SDLS > 1 "	0.31	0.17	0.38	53	NC, SC, S	
	GBG	0.31	0.19	0.42	53	NC, SC, S	
11/16" IG LoE 366 Argon 3.1 mm LoE 366 / 9.8mm argon / 4.7mm clr		0.28	0.20	0.46	55	N, NC, SC, S	A
	SDLS < 1 "	0.28	0.19	0.41	55	N, NC, SC, S	A
	SDLS > 1 "	0.28	0.17	0.37	55	N, NC, SC, S	A
	SDLN < 1 "	0.28	0.19	0.41	55	N, NC, SC, S	A
	SDLN > 1 "	0.28	0.17	0.37	55	N, NC, SC, S	A
	GBG	0.29	0.19	0.41	55	N, NC, SC, S	A
11/16" IG LoE 366 Argon 3.1 mm LoE 366 / 11.5mm argon / 3.1 mm clr		0.28	0.20	0.46	57	N, NC, SC, S	A
	SDLN > 1 "	0.28	0.17	0.38	57	N, NC, SC, S	A
	SDLN < 1 "	0.28	0.18	0.42	57	N, NC, SC, S	A
	SDLS > 1 "	0.28	0.17	0.38	57	N, NC, SC, S	A
	SDLS < 1 "	0.28	0.18	0.42	57	N, NC, SC, S	A
	GBG	0.28	0.18	0.42	57	N, NC, SC, S	A

RECEIVED
MAR 27 2015
DEPARTMENT OF
PLANNING & ZONING

Integrity from MARVIN Windows and Doors

WOOD-ULTREX DOUBLE HUNG

SECTION DETAILS: Not to Scale

STANDARD GLAZED

OPERATING – 4 9/16"

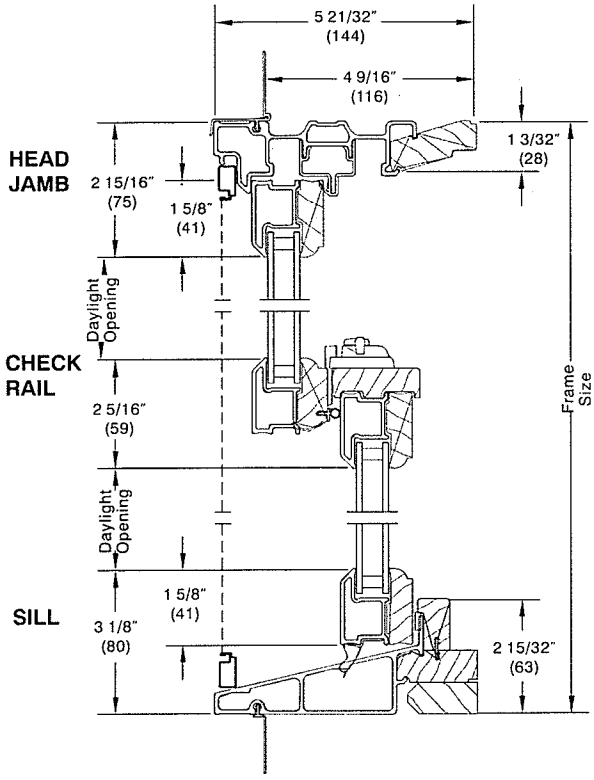

OPERATING – 6 9/16"

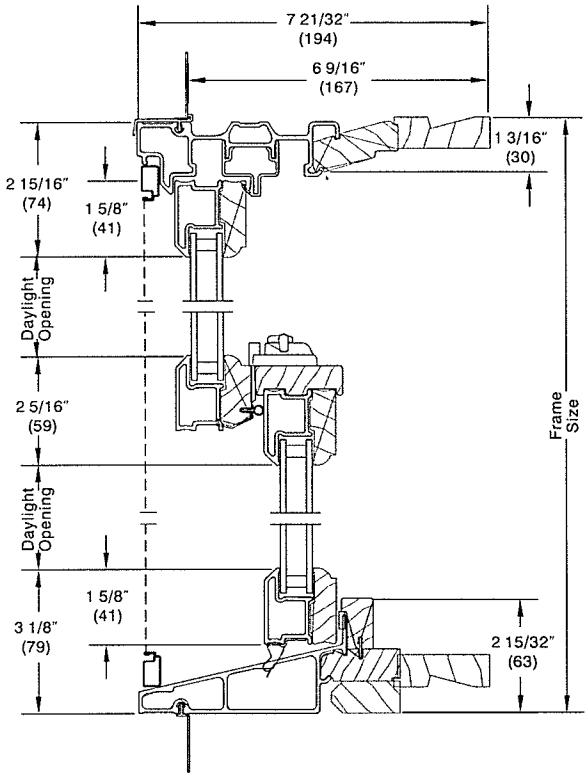

JAMB

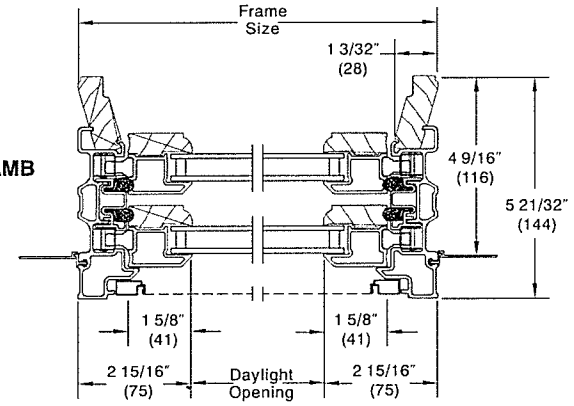

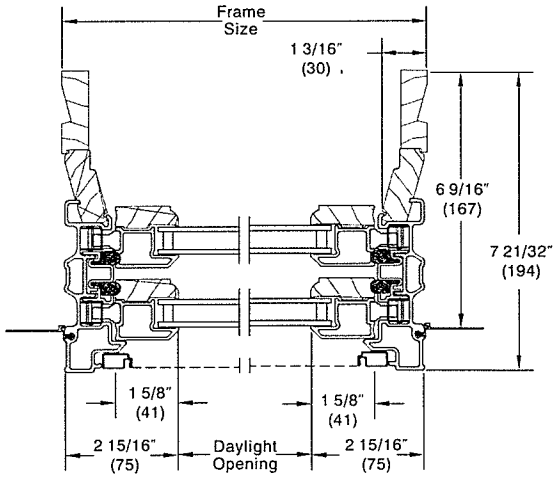

HIGH PERFORMANCE

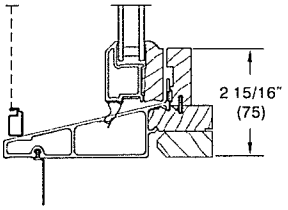

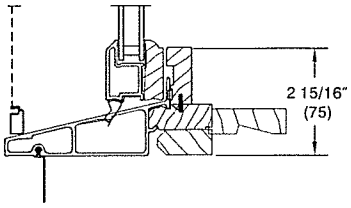

NOTE: CE is not available on High Performance units

RECEIVED
MAR 27 2015
DEPARTMENT OF
PLANNING & ZONING

SECTION DETAILS – OPERATORS Scale 3″ = 1′ 0″

CASEMENT/AWNING
OPERATING – 4 9/16″ (116)

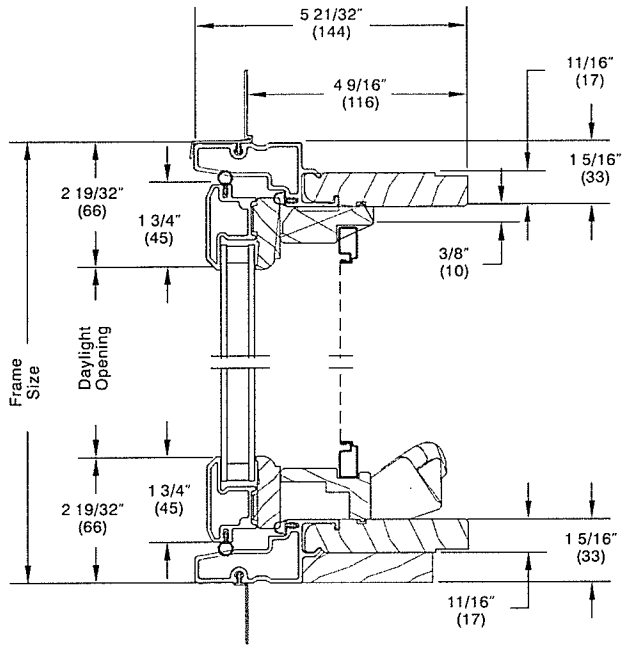

Head Jamb and Sill

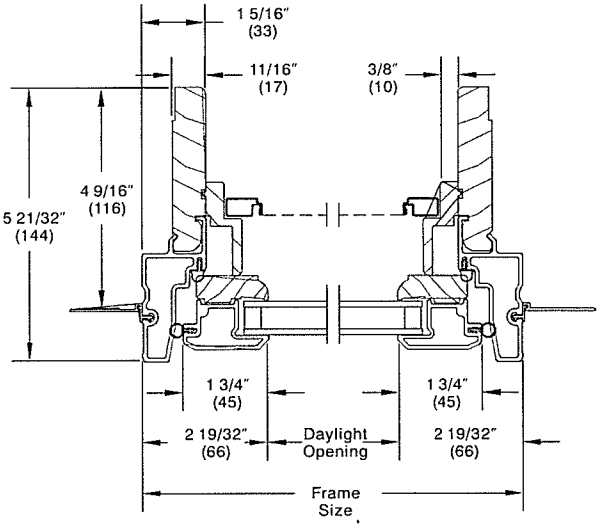

Jambs

OPERATING – 6 9/16″ (167)

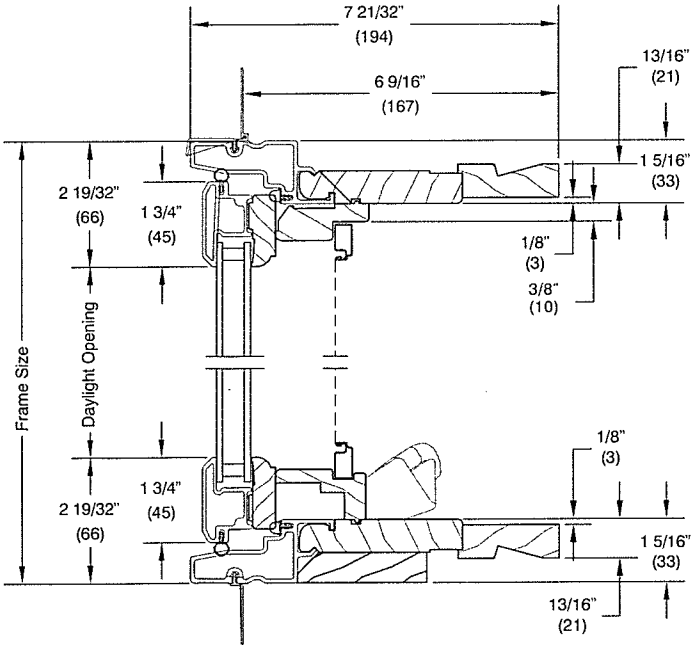

Head Jamb and Sill

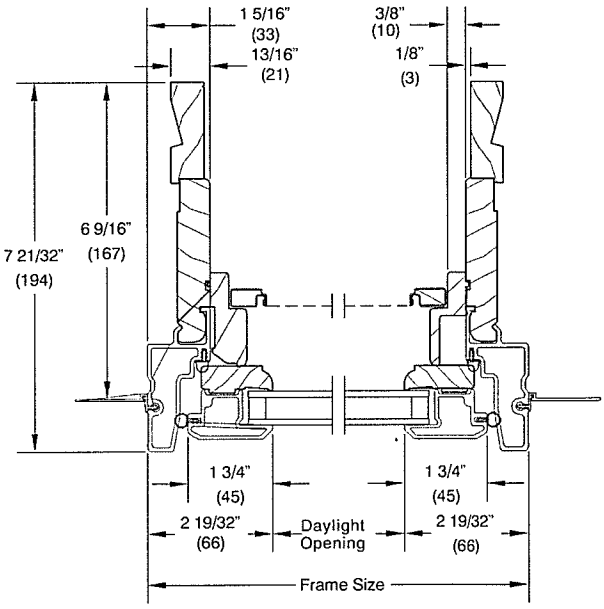

Jambs