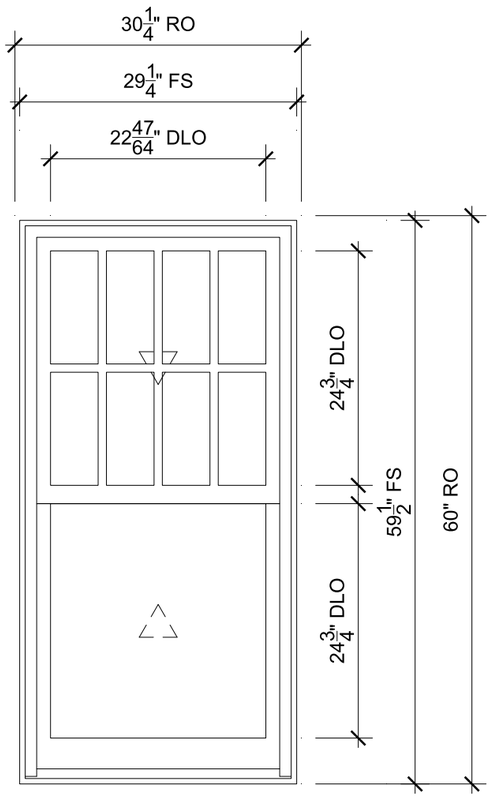

NORTH - OFFICE

SCALE: 3/4" = 1'-0"

- 1/4 Head
- 2/4 Jamb
- 3/4 Sill
- 4/4 Divided Lite
- 5/4 Checkrail

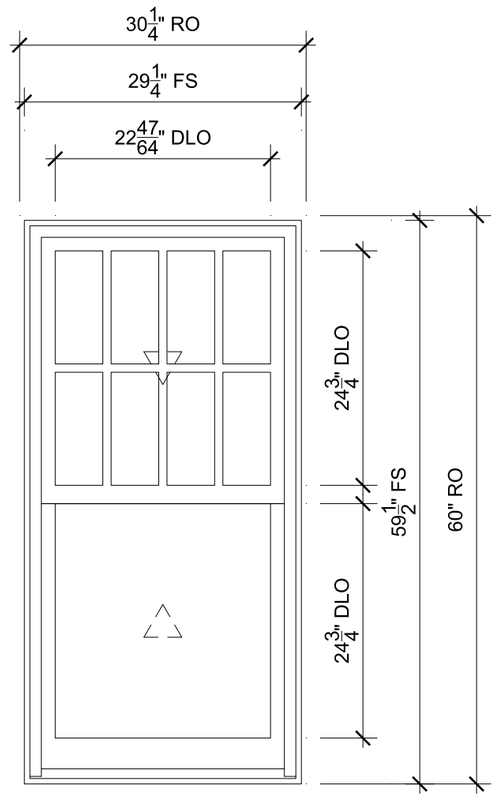

EAST - SHOP

SCALE: 3/4" = 1'-0"

- 1/4 Head
- 2/4 Jamb
- 3/4 Sill
- 4/4 Divided Lite
- 5/4 Checkrail

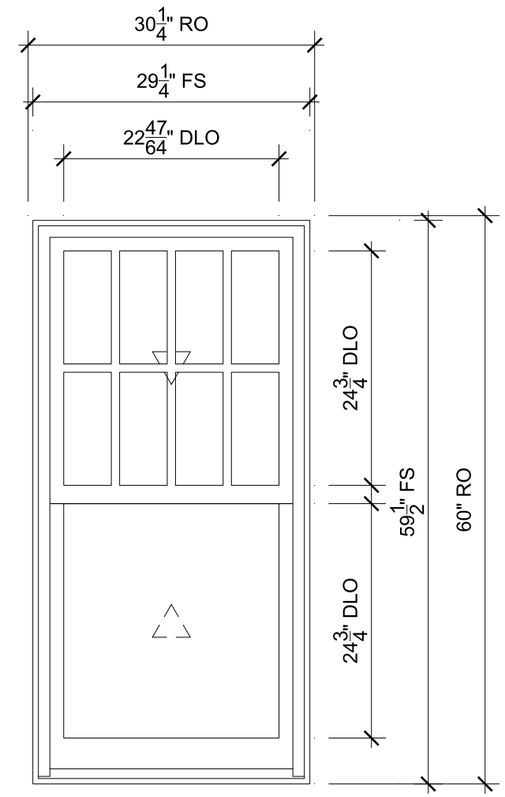

EAST - DEN

SCALE: 3/4" = 1'-0"

- 1/4 Head
- 2/4 Jamb
- 3/4 Sill
- 4/4 Divided Lite
- 5/4 Checkrail

MARVIN

ORDERING PRODUCTS WITH REFERENCE TO SHOP DRAWINGS: Before ordering the Marvin products illustrated within these shop drawings, a copy of these drawings accompanied by an approved signature of the purchaser must be returned to the Architectural Division at Marvin Windows & Doors, P.O. Box 100, Warroad, Minnesota 56763. If the Marvin products included herein are ordered without reference to the approved shop drawings, Marvin Windows and Doors assumes no responsibility in guaranteeing product coordination with the drawings.

PROJ/JOB: Vermont Construction / 38 Latham Court
DIST/DEALER: WINDOWS & DOORS BY BROWNELL-GO
DRAWN: TED SAY
QUOTE#: PBYB3BS PK VER:0003.08.01 CREATED: 05/06/2021 REVISION:

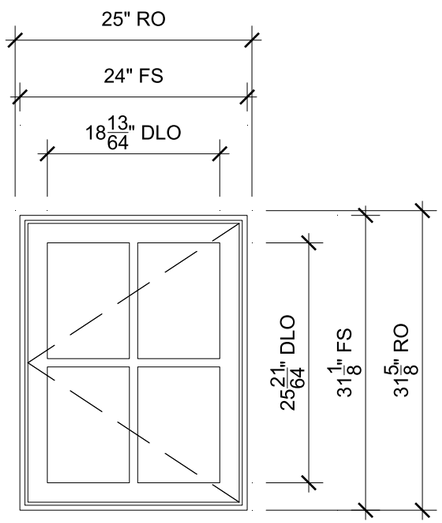

EAST - STAIRS

SCALE: 3/4" = 1'-0"

- 6/4 Head
- 7/4 Jamb
- 8/4 Sill
- 1/5 Divided Lite

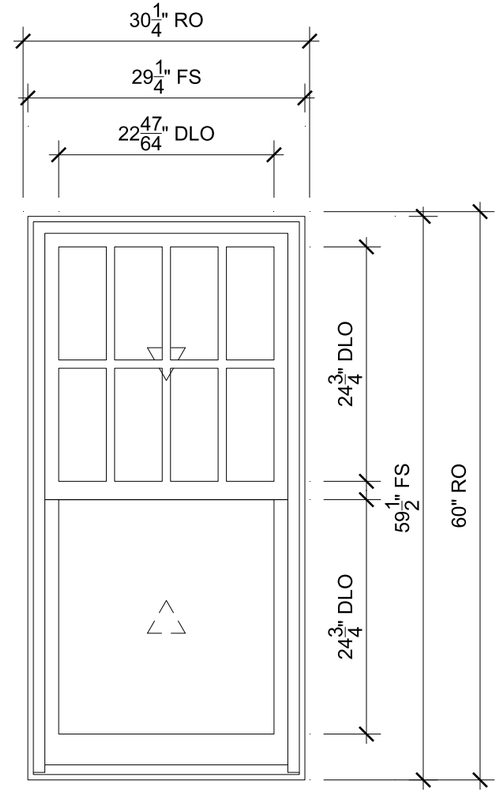

SOUTH - SHOP

SCALE: 3/4" = 1'-0"

- 1/4 Head
- 2/4 Jamb
- 3/4 Sill
- 4/4 Divided Lite
- 5/4 Checkrail

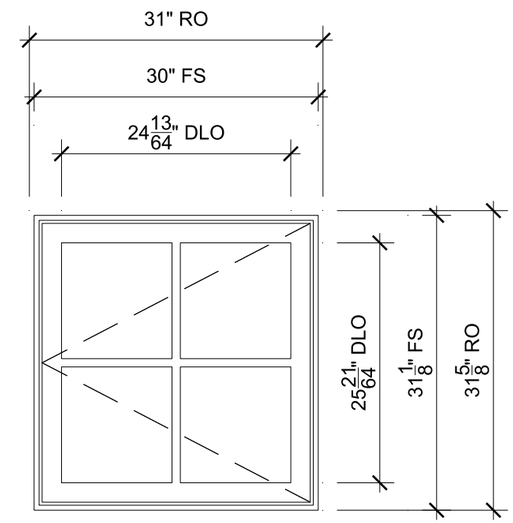

SOUTH - OFFICE

SCALE: 3/4" = 1'-0"

- 6/4 Head
- 7/4 Jamb
- 8/4 Sill
- 1/5 Divided Lite

MARVIN

ORDERING PRODUCTS WITH REFERENCE TO SHOP DRAWINGS:
Before ordering the Marvin products illustrated within these shop drawings, a copy of these drawings accompanied by an approved signature of the purchaser must be returned to the Architectural Division at Marvin Windows & Doors, P.O. Box 100, Warroad, Minnesota 56763. If the Marvin products included herein are ordered without reference to the approved shop drawings, Marvin Windows and Doors assumes no responsibility in guaranteeing product coordination with the drawings.

PROJ/JOB: Vermont Construction / 38 Latham Court
DIST/DEALER: WINDOWS & DOORS BY BROWNELL-GO
DRAWN: TED SAY
QUOTE#: PBYB3BS PK VER:0003.08.01 CREATED: 05/06/2021 REVISION:

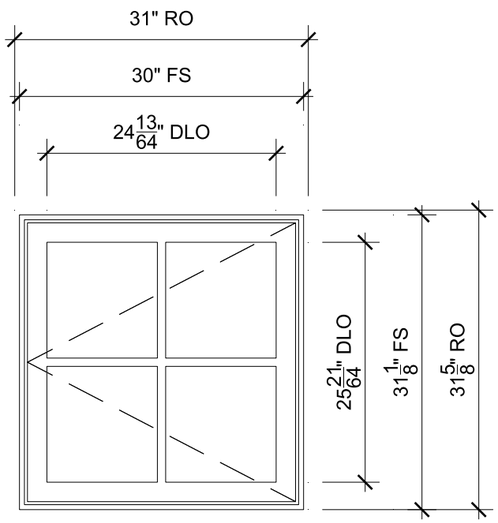

SOUTH - OFFICE (FIXED)

SCALE: 3/4" = 1'-0"

6/4 Head
7/4 Jamb
8/4 Sill
1/5 Divided Lite

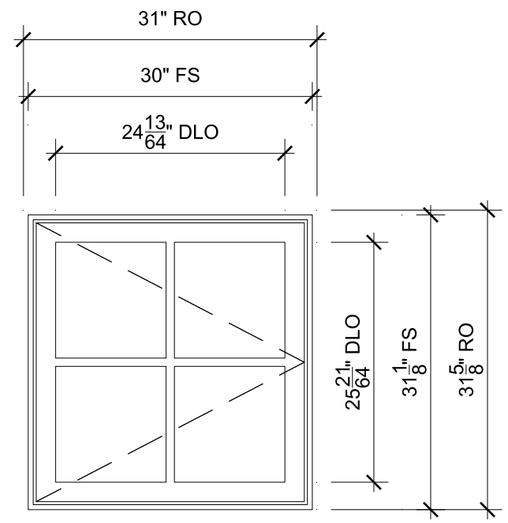

NORTH - OFFICE

SCALE: 3/4" = 1'-0"

6/4 Head
7/4 Jamb
8/4 Sill
1/5 Divided Lite

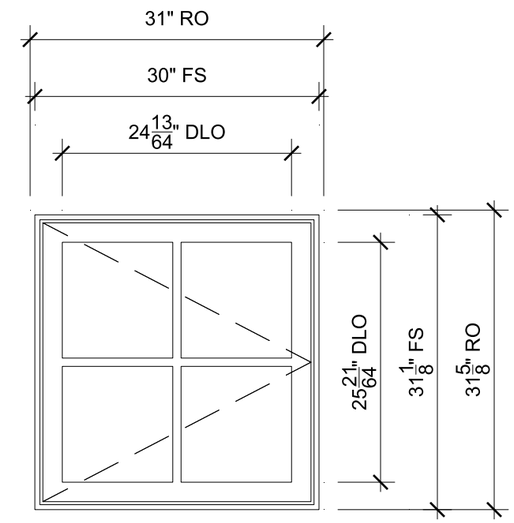

NORTH - OFFICE (TEMP)

SCALE: 3/4" = 1'-0"

6/4 Head
7/4 Jamb
8/4 Sill
1/5 Divided Lite

MARVIN

ORDERING PRODUCTS WITH REFERENCE TO SHOP DRAWINGS:
Before ordering the Marvin products illustrated within these shop drawings, a copy of these drawings accompanied by an approved signature of the purchaser must be returned to the Architectural Division at Marvin Windows & Doors, P.O. Box 100, Warroad, Minnesota 56763. If the Marvin products included herein are ordered without reference to the approved shop drawings, Marvin Windows and Doors assumes no responsibility in guaranteeing product coordination with the drawings.

PROJ/JOB: Vermont Construction / 38 Latham Court
DIST/DEALER: WINDOWS & DOORS BY BROWNELL-GO
DRAWN: TED SAY
QUOTE#: PBYB3BS PK VER:0003.08.01 CREATED: 05/06/2021 REVISION:

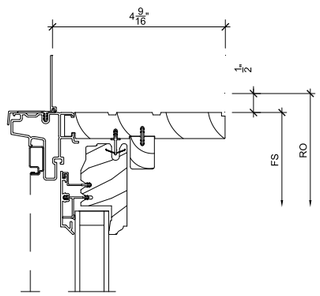

1/4 Head
SCALE: 3" = 1'-0"

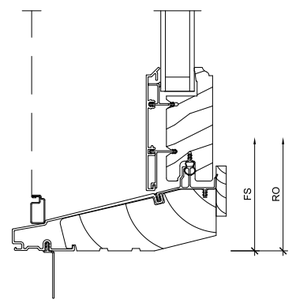

3/4 Sill
SCALE: 3" = 1'-0"

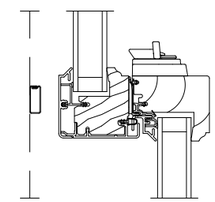

5/4 Checkrail
SCALE: 3" = 1'-0"

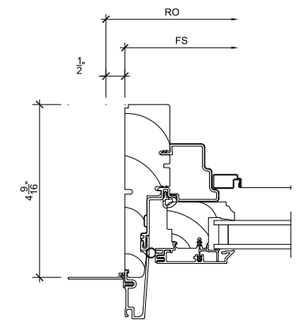

7/4 Jamb
SCALE: 3" = 1'-0"

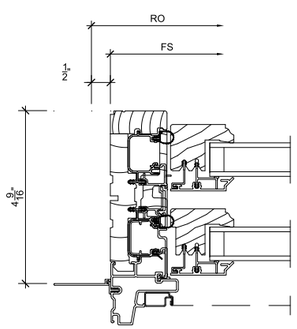

2/4 Jamb
SCALE: 3" = 1'-0"

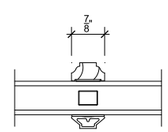

4/4 Divided Lite
SCALE: 3" = 1'-0"

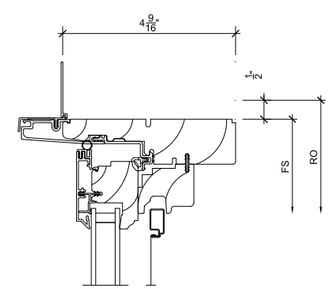

6/4 Head
SCALE: 3" = 1'-0"

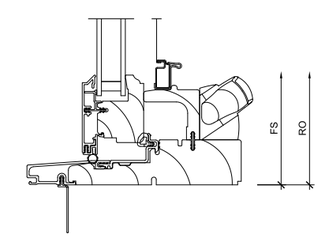

8/4 Sill
SCALE: 3" = 1'-0"

MARVIN

ORDERING PRODUCTS WITH REFERENCE TO SHOP DRAWINGS:
Before ordering the Marvin products illustrated within these shop drawings, a copy of these drawings accompanied by an approved signature of the purchaser must be returned to the Architectural Division at Marvin Windows & Doors, P.O. Box 100, Warroad, Minnesota 56763. If the Marvin products included herein are ordered without reference to the approved shop drawings, Marvin Windows and Doors assumes no responsibility in guaranteeing product coordination with the drawings.

PROJ/JOB: Vermont Construction / 38 Latham Court
DIST/DEALER: WINDOWS & DOORS BY BROWNELL-GO
DRAWN: TED SAY
QUOTE#: PBYB3BS PK VER:0003.08.01 CREATED: 05/06/2021 REVISION:

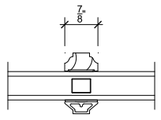

1/5 Divided Lite
SCALE: 3" = 1'-0"

3/5 NOT USED
SCALE: 3" = 1'-0"

5/5 NOT USED
SCALE: 3" = 1'-0"

7/5 NOT USED
SCALE: 3" = 1'-0"

2/5 NOT USED
SCALE: 3" = 1'-0"

4/5 NOT USED
SCALE: 3" = 1'-0"

6/5 NOT USED
SCALE: 3" = 1'-0"

8/5 NOT USED
SCALE: 3" = 1'-0"

MARVIN

ORDERING PRODUCTS WITH REFERENCE TO SHOP DRAWINGS:
Before ordering the Marvin products illustrated within these shop drawings, a copy of these drawings accompanied by an approved signature of the purchaser must be returned to the Architectural Division at Marvin Windows & Doors, P.O. Box 100, Warroad, Minnesota 56763. If the Marvin products included herein are ordered without reference to the approved shop drawings, Marvin Windows and Doors assumes no responsibility in guaranteeing product coordination with the drawings.

PROJ/JOB: Vermont Construction / 38 Latham Court
DIST/DEALER: WINDOWS & DOORS BY BROWNELL-GO
DRAWN: TED SAY
QUOTE#: PBYB3BS PK VER:0003.08.01 CREATED: 05/06/2021 REVISION: