INPATIENT BUILDING
FLETCHER ALLEN HEALTH CARE

BURLINGTON, VERMONT

SITE PERMIT APPLICATION

30 JUNE 2014

name

date

OWNER:
Fletcher Allen HEALTH CARE
In alliance with The University of Vermont
111 Colchester Avenue
Burlington, VT 05401
t: 802.847.0000
www.fletcherallen.org

ARCHITECT:
morris switzer environments for health
185 Talcott Road
Williston, Vermont 05495
t: 802.878.9841
f: 802.878.9350
www.MorrisSwitzer.com

CIVIL:
Stantec
55 Green Mountain Drive
South Burlington, VT 05403
t: 802.864.0223
f: 802.864.0165
www.stantec.com

LANDSCAPE:
WAGNER HODGSON LANDSCAPE ARCHITECTURE
7 Marble Avenue
Burlington, VT 05401
t: 802.864.0010
f: 802.864.6267
www.wagnerhodgson.com

INDEX OF DRAWINGS:

LOT COVERAGE:

LC-100 LOT COVERAGE EXISTING CAMPUS
LC-100a LOT COVERAGE WITH PROPERTY LINE ADJUSTMENT
LI-1.0 LIGHTING PLAN INPATIENT BUILDING PROJECT

CIVIL:

C-1PL BOUNDARY ADJUSTMENT PLAN
C-101 EXISTING CONDITIONS PLAN
C-102 ROADWAY LAYOUT PLAN
C-103 ROADWAY PROFILE
C-104 CIVIL SITE LAYOUT PLAN
C-105 SITE GRADING PLAN
C-106 EROSION CONTROL PLAN
C-107 UTILITY PLAN
C-501 SEWER DETAILS
C-502 WATER DETAILS
C-503 STORMWATER DETAILS
C-504 EROSION CONTROL DETAILS
C-505 GENERAL DETAILS

LANDSCAPE:

L1-0 LAYOUT AND MATERIALS PLAN
L2-0 PLANTING PLAN
L3-0 TREE SHADING PLAN FALL EQUINOX

ARCHITECTURAL:

AP-2.1 OVERHEAD VIEW
AP-2.2 EXTERIOR VIEW
AP-2.3 EXTERIOR VIEW
AP-2.3A EXTERIOR VIEW
AP-2.3B EXTERIOR VIEWS
AP-2.4 EXTERIOR ELEVATIONS
AP-2.5 EXTERIOR ELEVATIONS
AP-2.6 BUILDING SHADOW IMPACT DIAGRAMS
A1-1.0 LOWER LEVEL FLOOR PLAN
A1-2.0 FIRST FLOOR PLAN
A1-3.0 SECOND FLOOR PLAN
A1-4.0 THIRD FLOOR PLAN
A1-5.0 FOURTH FLOOR PLAN
A1-6.0 FIFTH FLOOR PLAN
A1-7.0 SIXTH FLOOR PLAN
A1-8.0 SEVENTH FLOOR PLAN
A1-9.0 ROOF PLAN
A3-2.1 WALL SECTIONS
A6-2.0 FIRST FLOOR REFLECTED CEILING PLAN

INPATIENT BUILDING
FLETCHER ALLEN HEALTH CARE

SITE PERMIT APPLICATION
30 JUNE 2014

PROJECT # 201254

© 2011 MorrisSwitzer–Environments for Health, Inc.

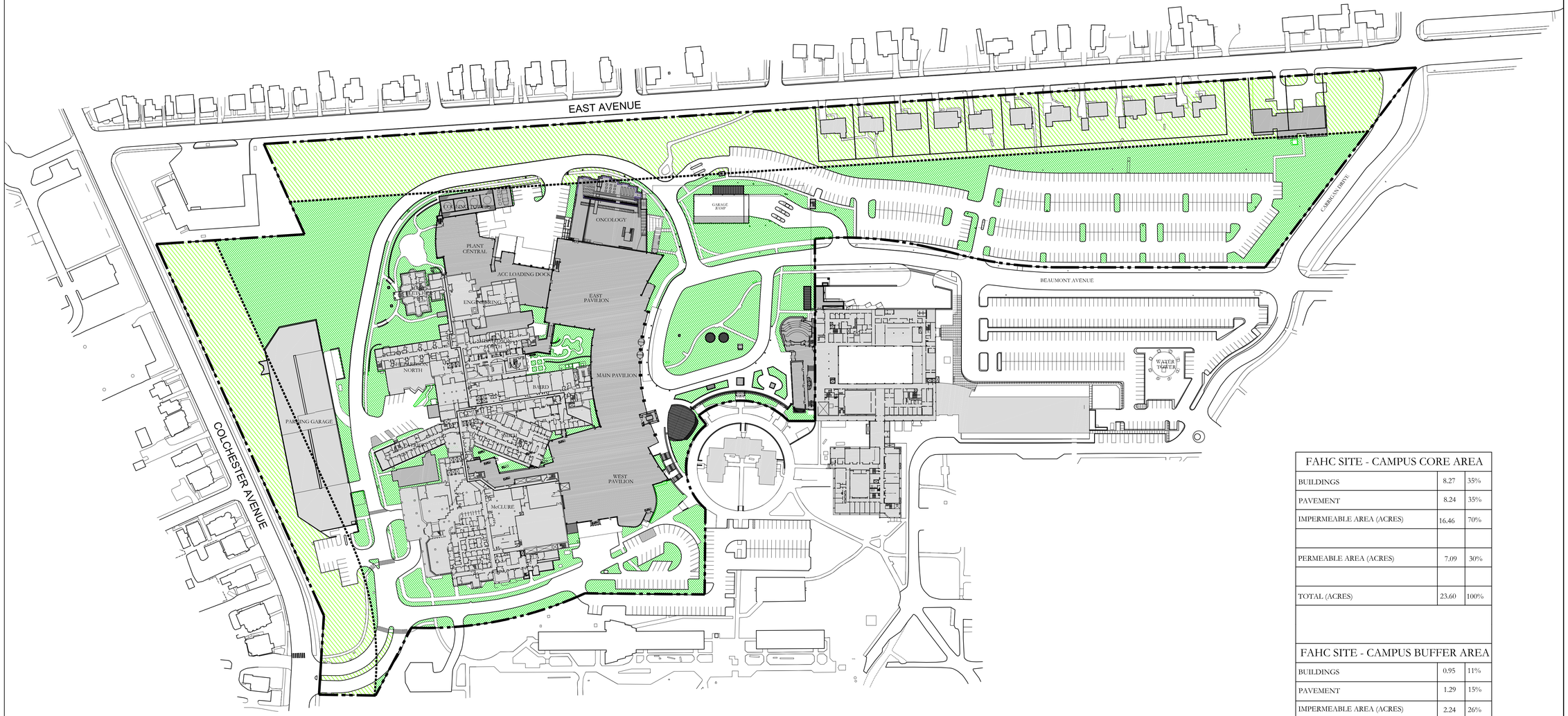

Legend:

- Open Space (permeable area) Campus Core
- Open Space (permeable area) Campus Buffer
- Campus Buffer Boundary
- Property Line

FAHC SITE - CAMPUS CORE AREA		
BUILDINGS	8.27	35%
PAVEMENT	8.24	35%
IMPERMEABLE AREA (ACRES)	16.46	70%
PERMEABLE AREA (ACRES)	7.09	30%
TOTAL (ACRES)	23.60	100%

FAHC SITE - CAMPUS BUFFER AREA		
BUILDINGS	0.95	11%
PAVEMENT	1.29	15%
IMPERMEABLE AREA (ACRES)	2.24	26%
PERMEABLE AREA (ACRES)	6.50	74%
TOTAL (ACRES)	8.74	100%

FAHC SITE - COMBINED		
BUILDINGS	9.22	28%
PAVEMENT	9.53	29%
IMPERMEABLE AREA (ACRES)	18.75	58%
PERMEABLE AREA (ACRES)	13.59	42%
TOTAL (ACRES)	32.34	100%

Fletcher Allen
Inpatient Bed Building
Project
Burlington, Vermont

SE GROUP
131 Church Street
Burlington, VT 05401
tel: 802.862.0098
fax: 802.865.2440
www.segroup.com

North

Scale: 1" = 100'

Date: 06/30/14

Drawn By:

Checked By: MW

Revisions:

Rev.	Description	Date	By
	Site Permit Application	06.30.14	

Title
Lot Coverage
Existing Campus

Sheet Number:

LC-100

Project Number: 07099

File:

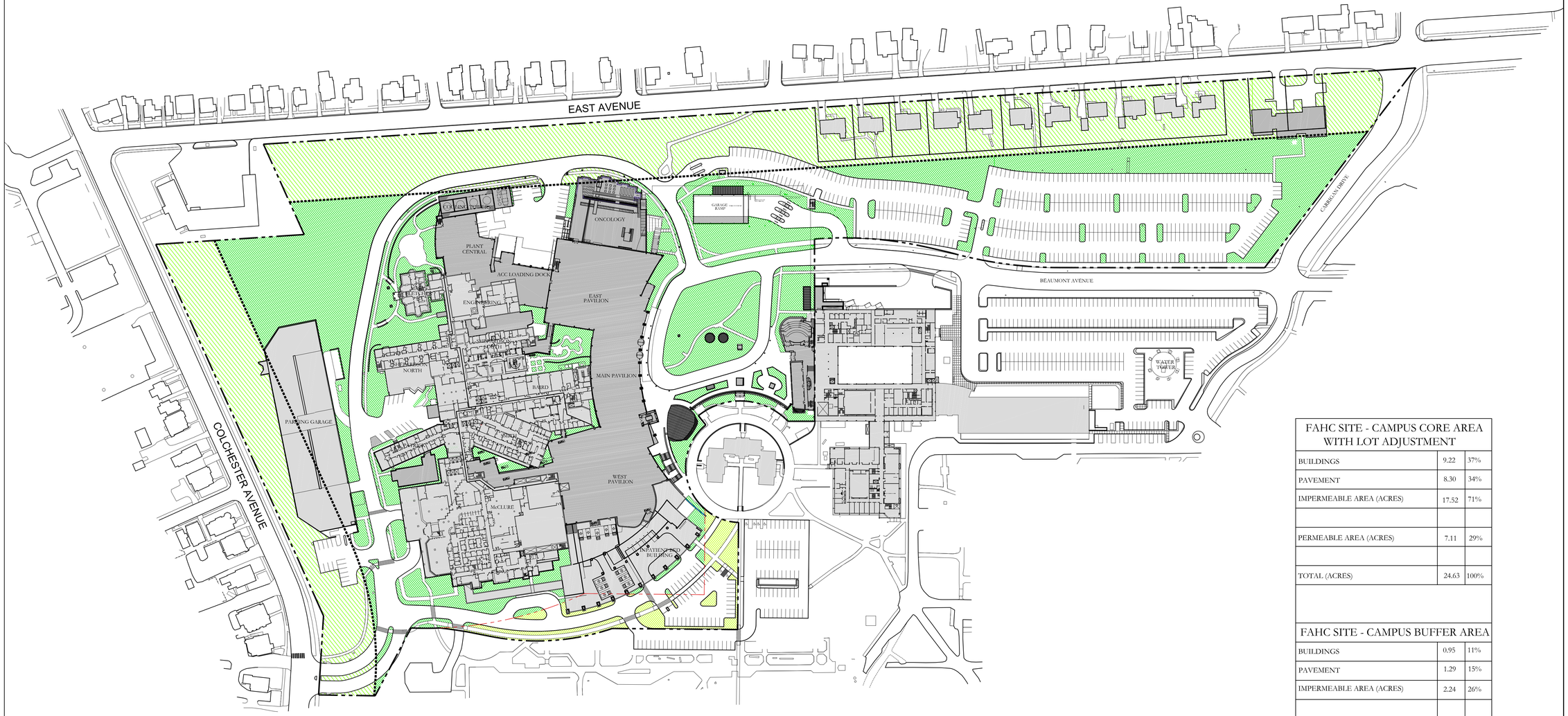

Legend:

- Open Space (permeable area) Campus Core
- Open Space (permeable area) Adjusted Lot Area
- Open Space (permeable area) Campus Buffer
- Campus Buffer Boundary
- Property Line
- Adjusted Property Line

FAHC SITE - CAMPUS CORE AREA WITH LOT ADJUSTMENT		
BUILDINGS	9.22	37%
PAVEMENT	8.30	34%
IMPERMEABLE AREA (ACRES)	17.52	71%
PERMEABLE AREA (ACRES)	7.11	29%
TOTAL (ACRES)	24.63	100%

FAHC SITE - CAMPUS BUFFER AREA		
BUILDINGS	0.95	11%
PAVEMENT	1.29	15%
IMPERMEABLE AREA (ACRES)	2.24	26%
PERMEABLE AREA (ACRES)	6.50	74%
TOTAL (ACRES)	8.74	100%

FAHC SITE - COMBINED		
BUILDINGS	10.17	30%
PAVEMENT	9.59	29%
IMPERMEABLE AREA (ACRES)	19.76	59%
PERMEABLE AREA (ACRES)	13.61	41%
TOTAL (ACRES)	33.37	100%

Fletcher Allen
Inpatient Bed Building
Project
Burlington, Vermont

SE GROUP
131 Church Street
Burlington, VT 05401
tel: 802.862.0098
fax: 802.865.2440
www.segroup.com

North

Scale: 1" = 100'

Date: 06/30/14

Drawn By:

Checked By: MW

Revisions:

Rev.	Description	Date	By
	Site Permit Application	06.30.14	

Title
Lot Coverage
with Property Line
Lot Adjustment

Sheet Number:

LC-100a

Project Number: 07099

File:

GENERAL NOTES

ALL CONTRACTORS ARE REQUIRED TO CONTACT THE UTILITY LOCATE COMPANIES, THE COUNTY PUBLIC WORKS DEPARTMENT, AND ANY OTHER PUBLIC OR PRIVATE AGENCY NECESSARY FOR UTILITY LOCATION PRIOR TO ANY CONSTRUCTION.

THIS DRAWING IS A PART OF A COMPLETE SET OF DOCUMENTS, SPECIFICATIONS, ADDITIONAL DRAWINGS, AND EXHIBITS. UNDER NO CIRCUMSTANCES SHOULD THESE PLANS BE USED FOR CONSTRUCTION PURPOSES WITHOUT EXAMINING ACTUAL LOCATIONS OF UTILITIES ON SITE, AND REVIEWING ALL RELATED DOCUMENTS MENTIONED HEREIN, INCLUDING A RELATED DOCUMENTS PREPARED BY THE PROJECT ENGINEERS, AND ARCHITECTS. DO NOT USE THIS SET OF DRAWINGS FOR CONSTRUCTION PRIOR TO NOTIFYING THE LANDSCAPE ARCHITECT.

LIGHTING AND IRRIGATION EXISTS THROUGHOUT THIS ENTIRE SITE. LOCATION OF LIGHTING AND SUPPLY SHOULD BE REVIEWED PRIOR TO CONSTRUCTION.

THE LOCATION OF THE UNDERGROUND UTILITIES ARE LOCATED ON ENGINEERING DRAWINGS PREPARED BY THE PROJECT ENGINEER. THE MOST CURRENT REVISION IS HERE IN MADE PART OF THIS DOCUMENT. UNDERGROUND UTILITIES EXIST THROUGHOUT THIS SITE AND MUST BE LOCATED PRIOR TO CONSTRUCTION. WHERE UNDERGROUND UTILITIES EXIST, FIELD ADJUSTMENT MUST BE APPROVED BY A REPRESENTATIVE OF THE OWNER PRIOR TO INSTALLATION. NEITHER THE OWNER NOR THE LANDSCAPE ARCHITECT ASSUMES ANY RESPONSIBILITY WHATSOEVER, IN RESPECT TO THE CONTRACTORS ACCURACY IN LOCATING THE INDICATED PLANT MATERIAL, AND UNDER NO CIRCUMSTANCES SHOULD THESE PLANS BE USED WITHOUT REFERENCING THE ABOVE MENTIONED DOCUMENTS.

THE LANDSCAPE ARCHITECT AND CONSULTANTS DO NOT WARRANT OR GUARANTEE THE ACCURACY AND COMPLETENESS OF THE WORK PRODUCT THEREIN BEYOND A REASONABLE DILIGENCE. IF ANY MISTAKES, OMISSIONS, OR DISCREPANCIES ARE FOUND TO EXIST WITH THE WORK PRODUCT, THE LANDSCAPE ARCHITECT SHALL BE PROMPTLY NOTIFIED SO THAT THEY MAY HAVE THE OPPORTUNITY TO TAKE ANY STEPS NECESSARY TO RESOLVE THE ISSUE. FAILURE TO PROMPTLY NOTIFY THE OWNER AND THE LANDSCAPE ARCHITECT OF SUCH CONDITIONS SHALL ABSOLVE THEM FROM ANY RESPONSIBILITY FOR THE CONSEQUENCES OF SUCH FAILURE. ACTIONS TAKEN WITHOUT THE KNOWLEDGE AND CONSENT OF THE OWNER AND THE LANDSCAPE ARCHITECT, OR IN CONTRADICTION TO THE OWNER AND THE LANDSCAPE ARCHITECTS WORK PRODUCT OR RECOMMENDATIONS, SHALL BECOME THE RESPONSIBILITY NOT OF THE OWNER AND THE LANDSCAPE ARCHITECT BUT FOR THE PARTIES RESPONSIBLE FOR THE TAKING OF SUCH ACTION.

EXTERIOR SITE LIGHTING KEY

LABEL	*SYMBOL*	*QTY.*	*BRAND*	*DESCRIPTION*	*CONFIGURATION*	*DISTRIBUTION*	*LAMP WATTAGE*
C		14	LUMEC	OPTICONE w/ EcoFit Retrofit 20' MOUNTING HEIGHT	SINGLE	TYPE V	90 WATT EcoFit LED Retrofit
C2		3	LUMEC	OPTICONE w/ EcoFit Retrofit 20' MOUNTING HEIGHT	2@180°	TYPE V	90 WATT EcoFit LED Retrofit
g12		11	DESIGNPLAN	MOONSHINE WALL LIGHT MA2	SINGLE	MEDIUM BEAM	70 WATT METAL HALIDE
HL		5	BEGA	RECESSED WALL MOUNTED LUMINAIRE 2039LED	SINGLE	ETCHED DIFFUSER	13.4 WATT LED
K		5	RAB	ALED26 20' MOUNTING HEIGHT	SINGLE	TYPE 4	26 WATT LED
K2		1	RAB	ALED26 20' MOUNTING HEIGHT	2@180°	TYPE 4	26 WATT LED
EX				EXISTING LIGHT FIXTURES TO REMAIN			

ISO-CONTOUR KEY

ISO-CONTOUR	*FOOTCANDLE VALUE*
	1.00
	0.50
	0.25

STATISTICAL AREA SUMMARY

Grid Type: Horizontal Illuminance Grid Units: Footcandles	Ave	Max	Min	Ave/Min	Max/Min
FAHC - Side Lot	1.47	5.20	0.10	14.70	52.00
UVM/ED Parking Lot	0.82	3.60	0.00	0.00	0.00

Fletcher Allen HEALTH CARE
In alliance with The University of Vermont

RENAISSANCE PROJECT

SE GROUP
131 Church Street
Burlington, VT 05401
tel: 802.862.0098
fax: 802.865.2440
www.segroup.com

0 15' 30' 60'
Graphic Scale: 1"=30'

N
North

Scale: 1" = 30'

Date: 06/30/14

Drawn By:

Checked By: MKW

Revisions:

Rev.	Description	Date	By

Title

Lighting Plan
Inpatient Building Project

Sheet Number:

LI-1.0

Project Number:

File:

morris switzer
environments for health

Williston, Vermont
Boston, Massachusetts
Portland, Maine

185 Talcott Road
Williston, VT 05495
t 802.878.8841
f 802.878.9350

© 2011 MorrisSwitzer

morrisswitzer.com

Seals

Stantec

Stantec Consulting Services Inc.
55 Green Mountain Drive
South Burlington VT 05403 U.S.A.
Tel. 802.864.0223
Fax. 802.864.0165
www.stantec.com

Consultant

DD Approval Signature	Date

Project North

Key Plan N.T.S.

Revision	Date	No
SITE PERMIT APPLICATION	06.30.14	

Fletcher Allen HEALTH CARE
In alliance with The University of Vermont

INPATIENT BUILDING

MorrisSwitzer Project Number	201254
Drawn By	G. MERKLE
Date	30 JUNE 2014
Scale	1" = 40'-0"

Sheet Title and Number

EXISTING CONDITIONS PLAN

C-101

6/25/2014 10:07:27 AM

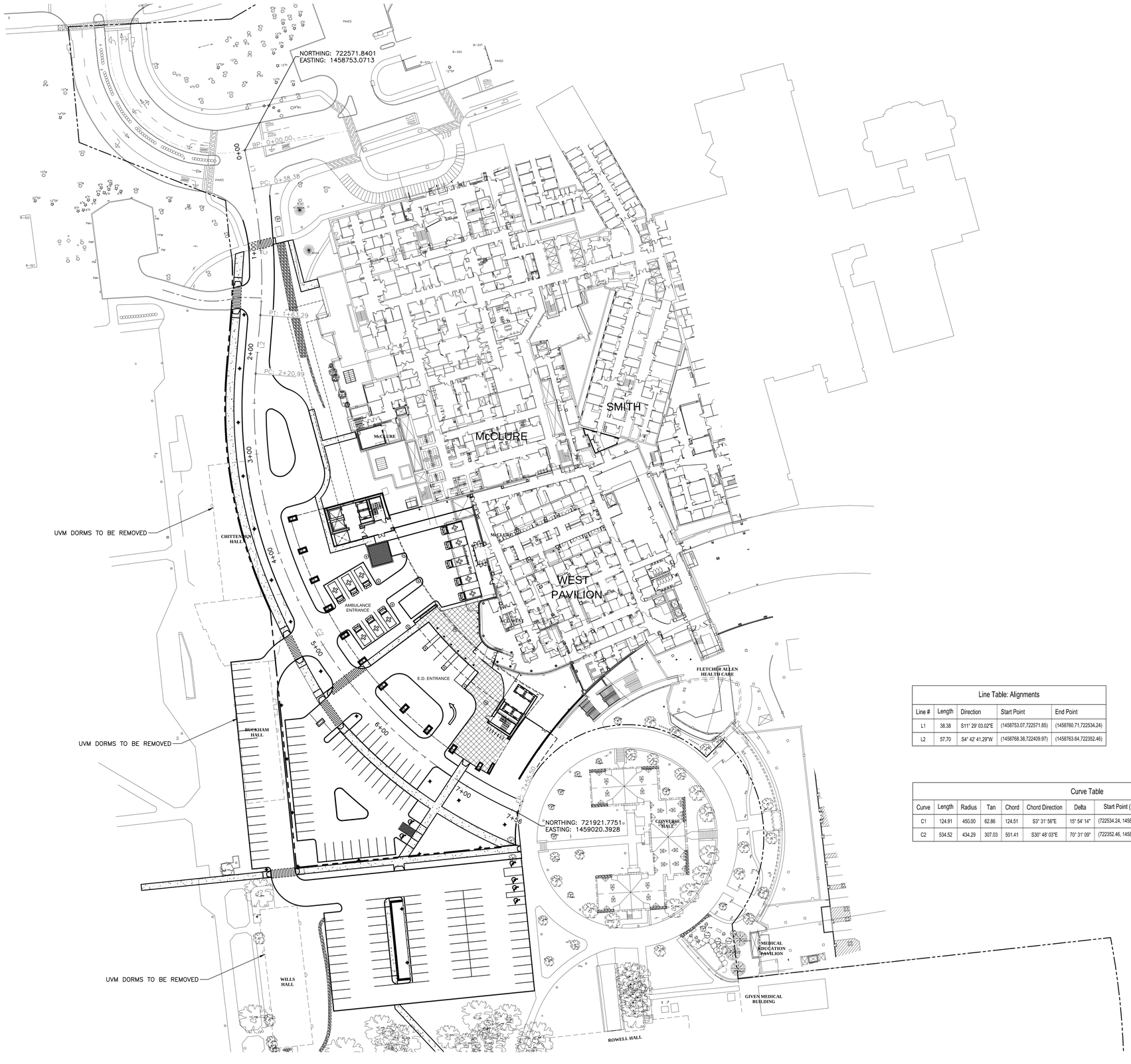

Line Table: Alignments				
Line #	Length	Direction	Start Point	End Point
L1	38.38	S11° 29' 03.02"E	(1458753.07,722571.85)	(1458760.71,722534.24)
L2	57.70	S4° 42' 41.29"W	(1458768.38,722409.97)	(1458763.64,722352.46)

Curve Table									
Curve	Length	Radius	Tan	Chord	Chord Direction	Delta	Start Point (N,E)	End Point (N,E)	Center Point (N,E)
C1	124.91	450.00	62.86	124.51	S3° 31' 56"E	15° 54' 14"	(722534.24, 1458760.71)	(722409.97, 1458768.38)	(722444.64, 1458319.72)
C2	534.52	434.29	307.03	501.41	S30° 48' 03"E	70° 31' 09"	(722352.46, 1458763.64)	(721921.78, 1459020.39)	(722318.70, 1459196.61)

morris switzer
environments for health

Williston, Vermont
Boston, Massachusetts
Portland, Maine

185 Talcott Road
Williston, VT 05495
t 802.878.8841
f 802.878.9350

© 2011 MorrisSwitzer

morrisswitzer.com

Seals

Stantec

Stantec Consulting Services Inc.
55 Green Mountain Drive
South Burlington VT 05403 U.S.A.
Tel. 802.864.0223
Fax. 802.864.0165
www.stantec.com

Consultant

DD Approval Signature	Date

Project North

Key Plan N.T.S.

Revision	Date	No.
SITE PERMIT APPLICATION	06.30.14	

Fletcher Allen HEALTH CARE
In alliance with The University of Vermont

INPATIENT BUILDING

MorrisSwitzer Project Number	201254
Drawn By	G. MERKLE
Date	30 JUNE 2014
Scale	1" = 40'-0"
Sheet Title and Number	

ROADWAY LAYOUT PLAN

C-102

6/25/2014 10:07:27 AM

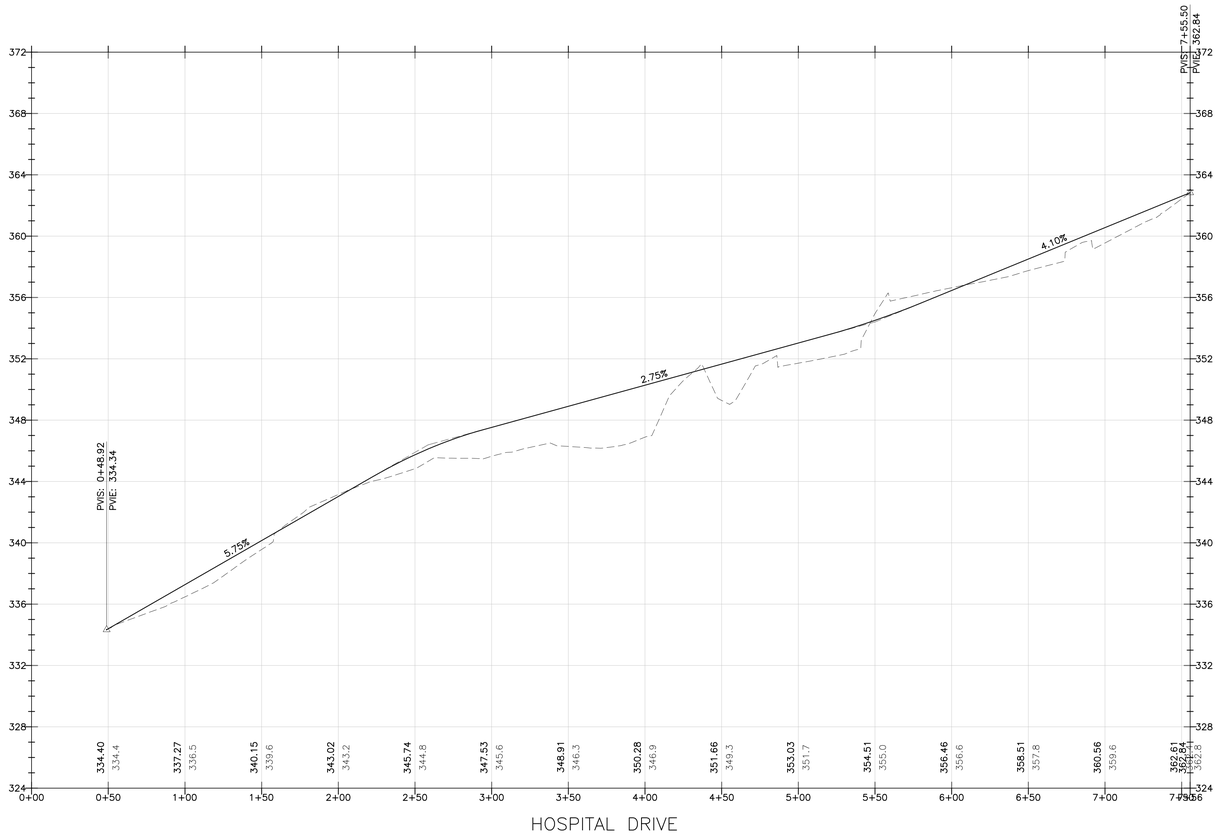

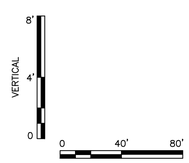

morris switzer
environments for health

Williston, Vermont
Boston, Massachusetts
Portland, Maine

185 Talcott Road
Williston, VT 05495
t 802.878.8841
f 802.878.9350

© 2011 MorrisSwitzer

morrisswitzer.com

Seals

Stantec

Stantec Consulting Services Inc.
55 Green Mountain Drive
South Burlington VT 05403 U.S.A.
Tel. 802.864.0223
Fax. 802.864.0165
www.stantec.com

Consultant

DD Approval Signature | Date

Project North

Key Plan N.T.S.

Revision	Date	No
SITE PERMIT APPLICATION	06.30.14	

Fletcher Allen HEALTH CARE
In alliance with The University of Vermont

INPATIENT BUILDING

MorrisSwitzer Project Number	201254
Drawn By	G. MERKLE
Date	30 JUNE 2014
Scale	AS SHOWN
Sheet Title and Number	

ROADWAY PROFILE

C-103

6/25/2014 10:07:27 AM

morris switzer
environments for health

Williston, Vermont
Boston, Massachusetts
Portland, Maine

185 Talcott Road
Williston, VT 05495
t 802.878.8841
f 802.878.9350

© 2011 MorrisSwitzer

morrisswitzer.com

Seals

Stantec

Stantec Consulting Services Inc.
55 Green Mountain Drive
South Burlington VT 05403 U.S.A.
Tel. 802.864.0223
Fax. 802.864.0165
www.stantec.com

Consultant

DD Approval Signature	Date

Project North

Key Plan N.T.S.

Revision	Date	No.
SITE PERMIT APPLICATION	06.30.14	

Fletcher Allen HEALTH CARE
In alliance with The University of Vermont

INPATIENT BUILDING

MorrisSwitzer Project Number	201254
Drawn By	G. MERKLE
Date	30 JUNE 2014
Scale	1" = 40'-0"

Sheet Title and Number

CIVIL SITE LAYOUT PLAN

C-104

6/25/2014 10:07:27 AM

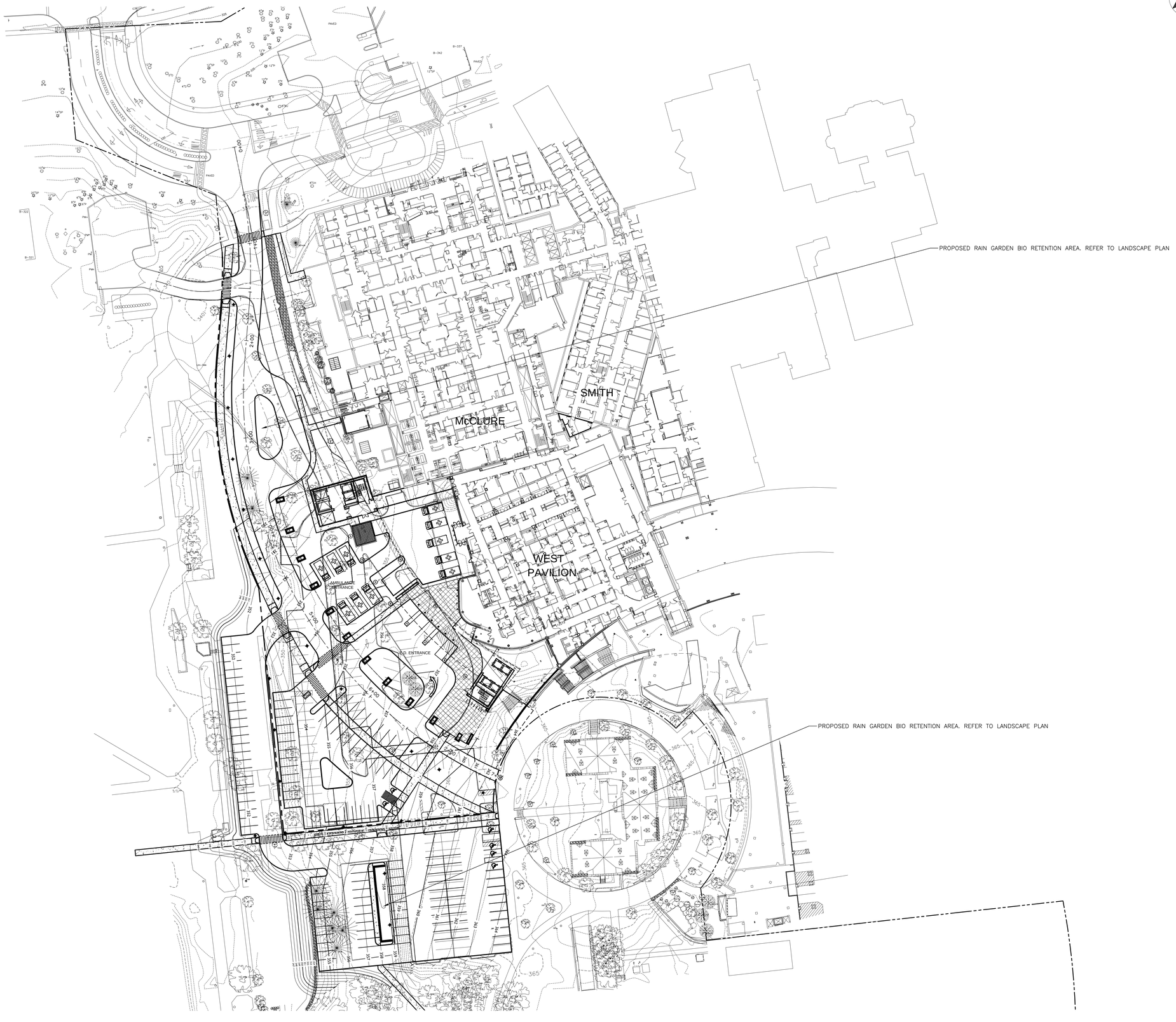

morris switzer
environments for health

Williston, Vermont
Boston, Massachusetts
Portland, Maine

185 Talcott Road
Williston, VT 05495
t 802.878.8841
f 802.878.9350

© 2011 MorrisSwitzer

morrisswitzer.com

Seals

Stantec

Stantec Consulting Services Inc.
55 Green Mountain Drive
South Burlington VT 05403 U.S.A.
Tel. 802.864.0223
Fax. 802.864.0165
www.stantec.com

Consultant

DD Approval Signature	Date

Project North

Key Plan N.T.S.

Revision	Date	No.
SITE PERMIT APPLICATION	06.30.14	

Fletcher Allen HEALTH CARE

In alliance with The University of Vermont

INPATIENT BUILDING

MorrisSwitzer Project Number	201254
Drawn By	G. MERKLE
Date	30 JUNE 2014
Scale	1" = 40'-0"

Sheet Title and Number

SITE GRADING PLAN

C-105

6/25/2014 10:07:27 AM

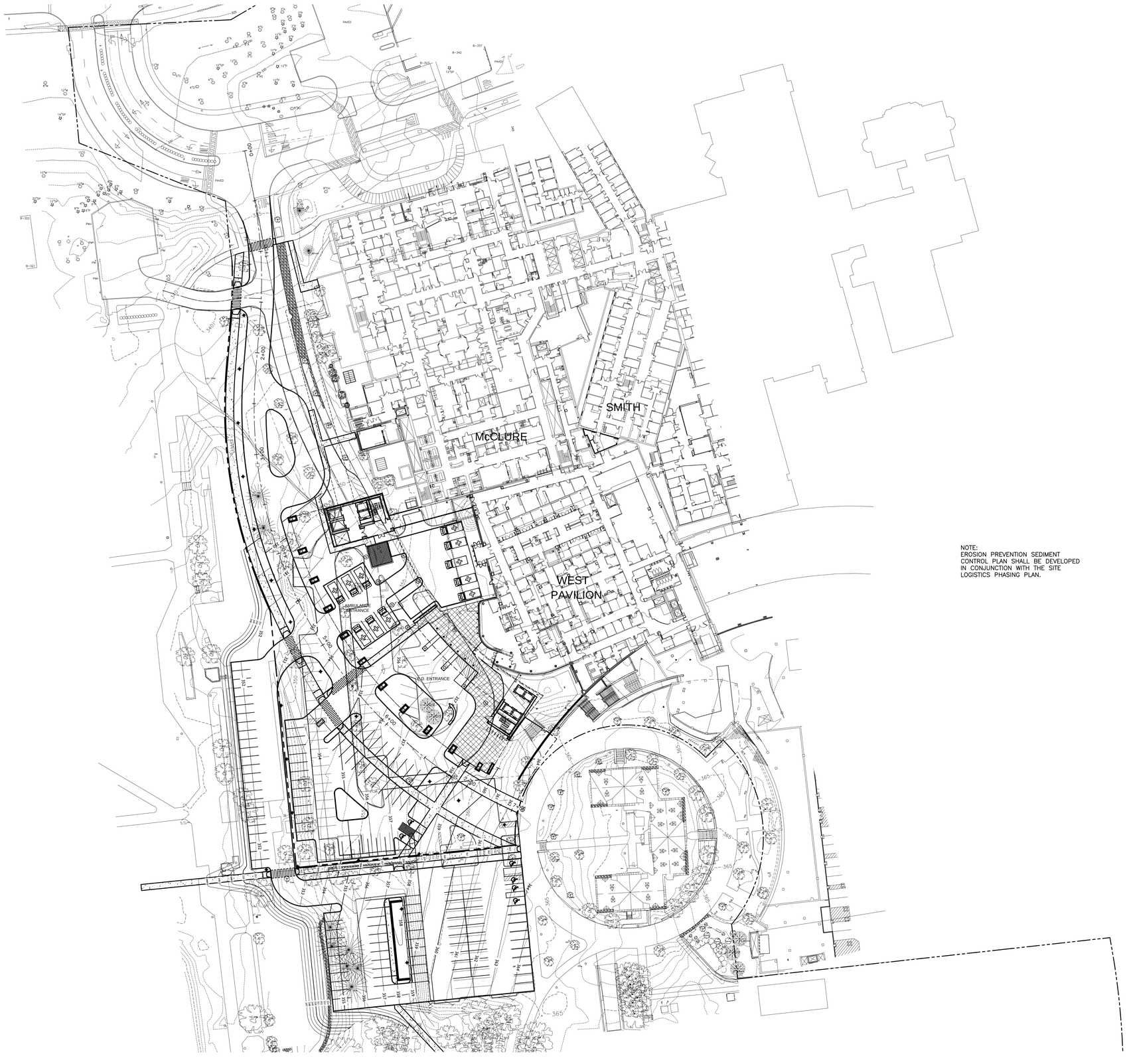

NOTE:
EROSION PREVENTION SEDIMENT CONTROL PLAN SHALL BE DEVELOPED IN CONJUNCTION WITH THE SITE LOGISTICS PHASING PLAN.

0 40' 80'

morris switzer
environments for health

Williston, Vermont
Boston, Massachusetts
Portland, Maine

185 Talcott Road
Williston, VT 05495
t 802.878.8841
f 802.878.9350

© 2011 MorrisSwitzer

morrisswitzer.com

Seals

Stantec

Stantec Consulting Services Inc.
55 Green Mountain Drive
South Burlington VT 05403 U.S.A.
Tel. 802.864.0223
Fax. 802.864.0165
www.stantec.com

Consultant

DD Approval Signature | Date

Project North

Key Plan N.T.S.

Revision	Date	No.
SITE PERMIT APPLICATION	06.30.14	

Fletcher Allen HEALTH CARE
In alliance with The University of Vermont

INPATIENT BUILDING

MorrisSwitzer Project Number	201254
Drawn By	G. MERKLE
Date	30 JUNE 2014
Scale	1" = 40'-0"

Sheet Title and Number

EROSION CONTROL PLAN

C-106

6/25/2014 10:07:27 AM

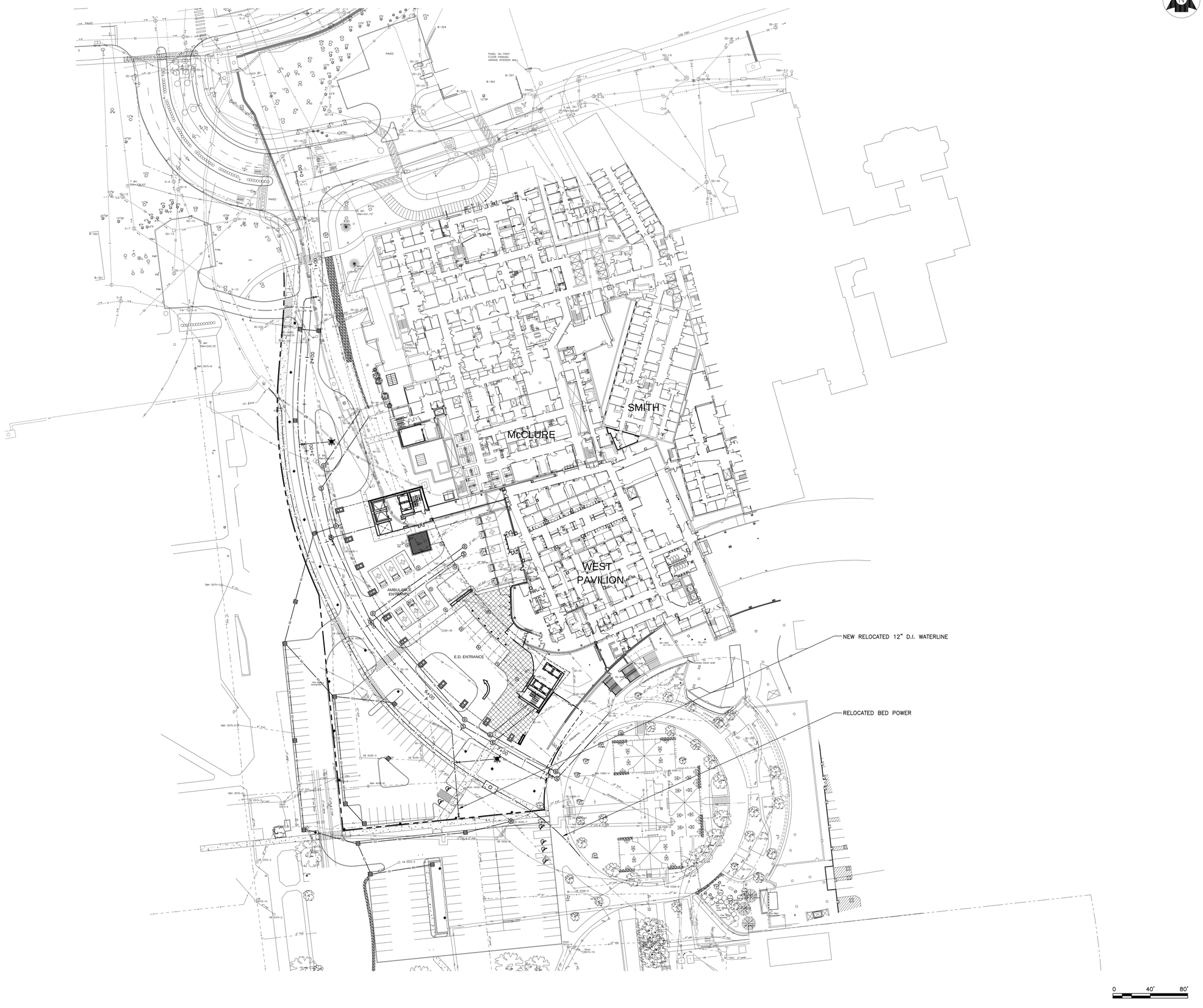

morris switzer
environments for health

Williston, Vermont
Boston, Massachusetts
Portland, Maine

185 Talcott Road
Williston, VT 05495
t 802.878.8841
f 802.878.9350

© 2011 MorrisSwitzer

morrisswitzer.com

Seals

Stantec

Stantec Consulting Services Inc.
55 Green Mountain Drive
South Burlington VT 05403 U.S.A.
Tel. 802.864.0223
Fax. 802.864.0165
www.stantec.com

Consultant

DD Approval Signature	Date

Project North

Key Plan N.T.S.

Revision	Date	No
SITE PERMIT APPLICATION	06.30.14	

Fletcher Allen HEALTH CARE
In alliance with The University of Vermont

INPATIENT BUILDING

MorrisSwitzer Project Number	201254
Drawn By	G. MERKLE
Date	30 JUNE 2014
Scale	1" = 40'-0"

Sheet Title and Number

UTILITY PLAN

C-107

6/25/2014 10:07:27 AM

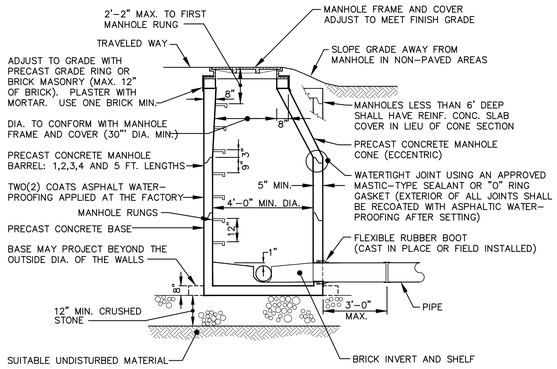

PRECAST CONCRETE MANHOLE

NOT TO SCALE

NOTE:
MANHOLE STRUCTURE TO BE CAPABLE OF SUPPORTING AASHTO H-20 LOADING

COVER PLATE
WEIGHT = 150 LBS.

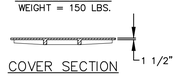

COVER SECTION

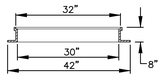

FRAME SECTION
MIN. WEIGHT = 250 LBS.

NOTE:
MANHOLE FRAME AND COVER TO BE LEBARON FOUNDRY, INC., CATALOG NO. LC 268-1 OR APPROVED EQUAL.

MANHOLE FRAME AND COVER DETAIL

NOT TO SCALE

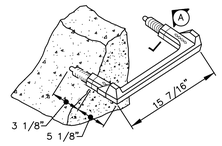

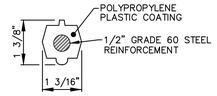

SECTION A
NOT TO SCALE

MANHOLE STEP DETAIL

NOT TO SCALE

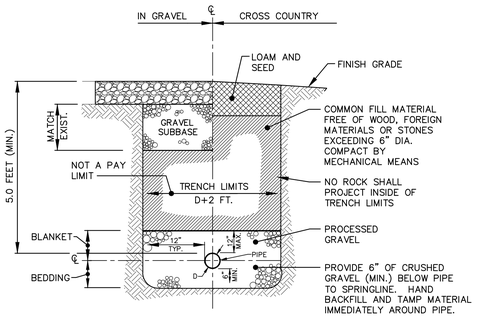

TYPICAL SANITARY SEWER TRENCH DETAIL

NOT TO SCALE

SIZE GUIDE: 1 – 8" OR 10" DROP] 4'-0" DIA MANHOLE
2 – 8" OR 10" DROP
1 – 12" DROP
1 – 15" DROP] 5'-0" DIA MANHOLE

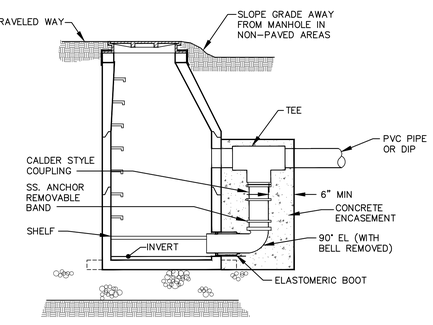

PRECAST CONCRETE DROP MANHOLE

NOT TO SCALE

NOTE:
SEE TYPICAL PRECAST CONCRETE MANHOLE DETAIL FOR NOTES AND ADDITIONAL INFORMATION

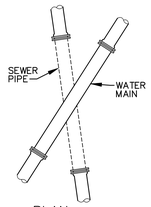

PLAN

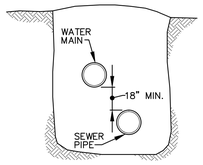

SECTION

NOTE:
AT WATER LINE CROSSINGS WHERE CLEARANCE BETWEEN WATER AND SEWER PIPES IS LESS THAN 18", SEWER PIPE SHALL BE SDR 26 PVC FOR A MIN. OF 20' EITHER SIDE OF THE CROSSING OR A TOTAL OF 3 PIPE LENGTHS, WHICHEVER IS GREATER. ONE FULL LENGTH OF SEWER PIPE SHALL BE CENTERED OVER WATER PIPE WITH SEWER JOINTS AS FAR AS POSSIBLE FROM WATER JOINTS. THE SEWER SECTION MUST BE PRESSURE TESTED TO MAINTAIN 50 PSI FOR 15 MINUTES WITHOUT LEAKAGE PRIOR TO BACKFILLING BEYOND ONE FOOT ABOVE THE PIPE TO ASSURE WATER TIGHTNESS.

SEWER PIPE AND WATER MAIN CROSSING

NOT TO SCALE

morris switzer
environments for health

Williston, Vermont
Boston, Massachusetts
Portland, Maine

185 Talcott Road
Williston, VT 05495
t 802.878.8841
f 802.878.9350

© 2011 MorrisSwitzer

morrisswitzer.com

Seals

Stantec

Stantec Consulting Services Inc.
55 Green Mountain Drive
South Burlington VT 05403 U.S.A.
Tel. 802.864.0223
Fax. 802.864.0165
www.stantec.com

Consultant

DD Approval Signature | Date

Project North

Key Plan N.T.S.

Revision	Date	No
SITE PERMIT APPLICATION	06.30.14	

Fletcher Allen HEALTH CARE
In alliance with The University of Vermont

INPATIENT BUILDING

MorrisSwitzer Project Number	201254
Drawn By	G. MERKLE
Date	30 JUNE 2014
Scale	NO SCALE

Sheet Title and Number

SEWER DETAILS

C-501

6/25/2014 10:07:27 AM

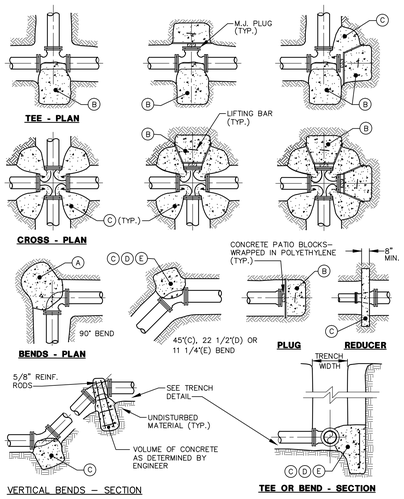

THRUST BLOCK DETAILS

NOT TO SCALE

THRUST BLOCK SCHEDULE
SQUARE FEET OF CONCRETE THRUST
BLOCKING BEARING ON UNDISTURBED MATERIAL

	REACTION TYPE	PIPE SIZE 4"	6"	8"
TEST PRESSURE = 100 PSIG	(A)	0.89	2.19	3.92
	(B)	0.65	1.55	2.76
	(C)	0.48	1.19	2.12
	(D)	0.25	0.60	1.08
	(E)	0.13	0.30	0.54
Other test pressures for the above reactions		TEST PRESSURE TO BE 200 PSI MIN. AT LOW END OF THE TEST SECTION. SQUARE FEET OF CONCRETE THRUST BLOCKING FOR OTHER TEST PRESSURES IS DIRECTLY PROPORTIONAL TO THE ABOVE TABLE. FOR INSTANCE, AT 200 PSI TEST PRESSURE FOR ABOVE NUMBERS DOUBLE.		

NOTES:

1. POUR THRUST BLOCKS AGAINST UNDISTURBED MATERIAL. WHERE TRENCH WALL HAS BEEN DISTURBED, EXCAVATE LOOSE MATERIAL AND EXTEND THRUST BLOCK TO UNDISTURBED MATERIAL. NO JOINTS SHALL BE COVERED WITH CONCRETE.
2. ON BENDS AND TEES, EXTEND THRUST BLOCKS FULL LENGTH OF FITTING.
3. PLACE CONCRETE PATIO BLOCKS IN FRONT OF ALL PLUGS BEFORE POURING THRUST BLOCK.
4. REQUIREMENTS OF THE ABOVE TABLE PRESUME MINIMUM SOIL BEARING OF 1 TON PER SQUARE FOOT, AND MAY BE VARIED BY THE ENGINEER TO MEET OTHER CONDITIONS ENCOUNTERED.
5. MEGA-LUG RETAINER GLANDS ARE REQUIRED FOR ALL MECHANICAL JOINTS. THESE GLANDS DO NOT REDUCE THE REQUIREMENTS FOR THRUST RESTRAINT.
6. ALL FITTINGS SHALL BE WRAPPED IN POLYETHYLENE OR BUILDING PAPER PRIOR TO INSTALLATION OF CONCRETE RESTRAINT.
7. THREADED ROD SHALL BE ANSI A242 FY50 PIPE RESTRAINT NUTS TO MATCH AWWA C111. THREADED RODS AND NUTS TO BE FIELD COATED WITH BITUMINOUS PAINT.
8. THRUST RESTRAINT IS REQUIRED FOR ALL TEES, BENDS, REDUCERS, CAPS, PLUGS, OR CROSSES.
9. INSTALL LIFT HOOKS INTO THRUST BLOCKS AT END CAPS AND PLUGS.

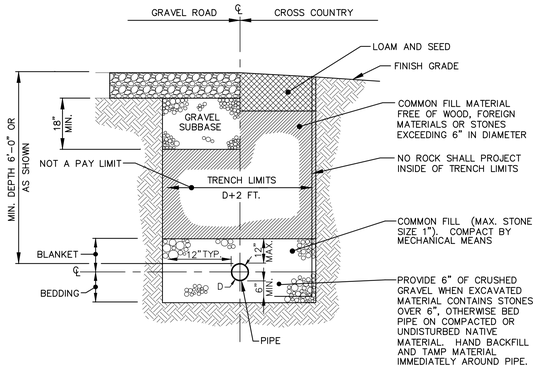

DUCTILE IRON PIPE TRENCH DETAIL

NOT TO SCALE

NOTE:
COMPACTION TO BE IN ACCORDANCE WITH SPECIFICATION SECTION 312000

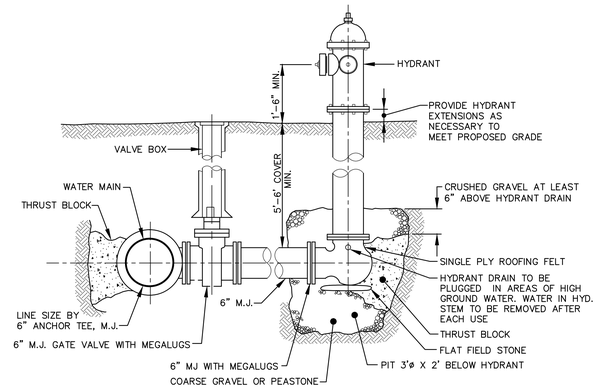

HYDRANT ASSEMBLY DETAIL

NOT TO SCALE

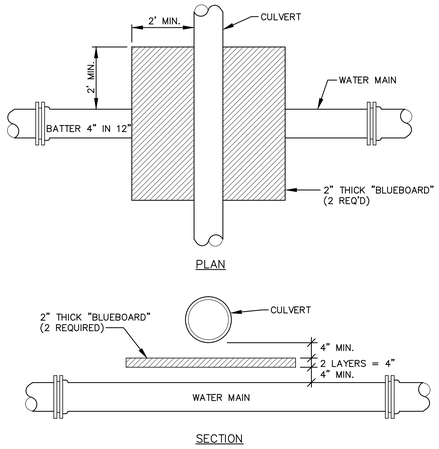

WATER MAIN INSULATION DETAIL

NOT TO SCALE

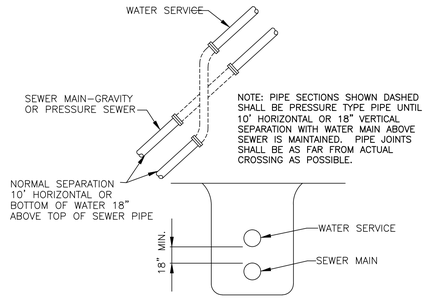

SEWER/WATER PIPE CROSSING DETAIL

NOT TO SCALE

NOTE: ANY VARIATION FROM THIS METHOD MUST BE APPROVED BY THE ENGINEER AND DWGPD ENGINEER AND MUST BE CALLED OUT ON RECORD DRAWING AS BEING EXCEPTION TO USR CONSTRUCTION STANDARDS.

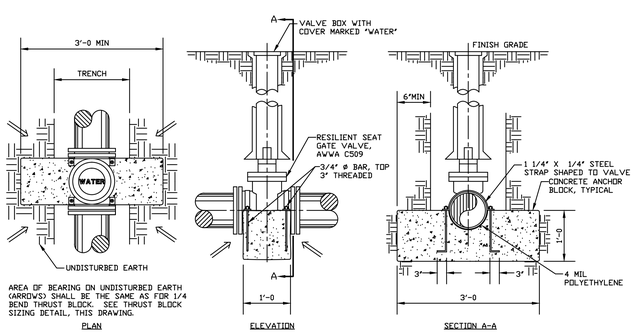

VALVE ANCHOR DETAIL

NOT TO SCALE

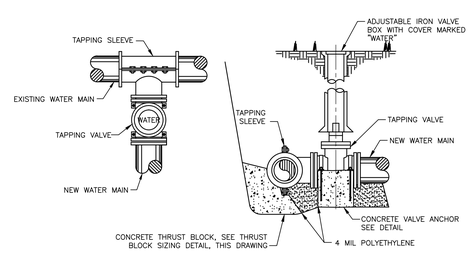

TAPPING SLEEVE AND VALVE DETAIL

NOT TO SCALE

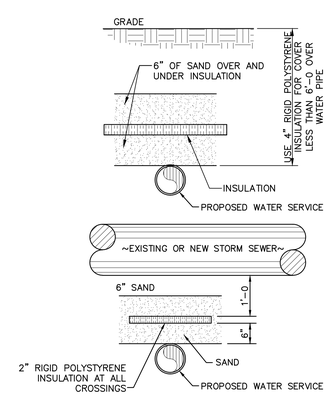

TRENCH INSULATION DETAIL

NOT TO SCALE

morris switzer
environments for health

Williston, Vermont
Boston, Massachusetts
Portland, Maine

185 Talcott Road
Williston, VT 05495
t 802.878.8841
f 802.878.9350

© 2011 MorrisSwitzer

morrisswitzer.com

Seals

Stantec

Stantec Consulting Services Inc.
55 Green Mountain Drive
South Burlington VT 05403 U.S.A.
Tel. 802.864.0223
Fax. 802.864.0165
www.stantec.com

Consultant

DD Approval Signature | Date

Project North

Key Plan N.T.S.

SITE PERMIT APPLICATION	06.30.14	

Revision | Date | No.

Fletcher Allen HEALTH CARE
In alliance with The University of Vermont

INPATIENT BUILDING

MorrisSwitzer Project Number	201254
Drawn By	G. MERKLE
Date	30 JUNE 2014
Scale	NO SCALE

Sheet Title and Number

WATER DETAILS

C-502

6/25/2014 10:07:27 AM

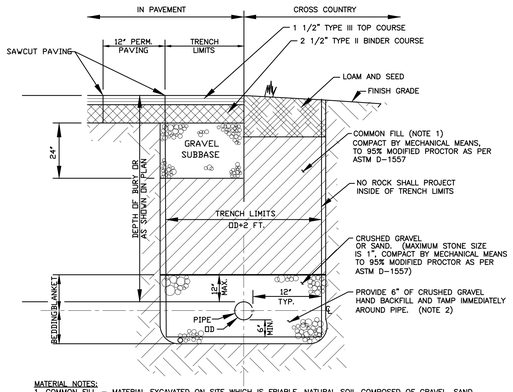

MATERIAL NOTES:
1. COMMON FILL – MATERIAL EXCAVATED ON SITE WHICH IS FRIABLE, NATURAL SOIL COMPOSED OF GRAVEL, SAND, OR SILTY OR CLAYEY GRAVEL AND SAND; FREE FROM DEBRIS, CONCRETE OR OTHER RUBBLE, ORGANIC MATTER, MUCK, PEAT, EXCAVATED ROCK AND BOULDERS OF 6 INCHES IN MAXIMUM DIMENSION OR GREATER.

2. CRUSHED GRAVEL: CLEAN HARD CRUSHED GRAVEL; FREE FROM SILT, TOPSOIL, CLAY, AND ORGANIC MATTER, UNIFORMLY GRADED FROM COARSE TO FINE WITHIN THE LIMITS SPECIFIED IN ASTM C136.

HDPE STORM TRENCH DETAIL
NOT TO SCALE

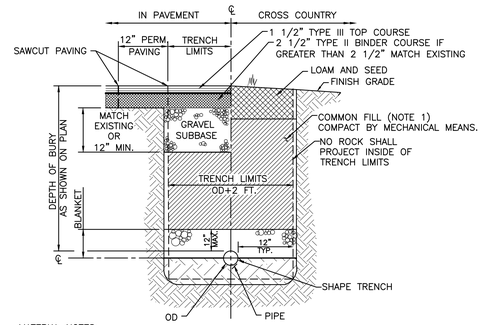

MATERIAL NOTES:
1. COMMON FILL – MATERIAL EXCAVATED ON SITE WHICH IS FRIABLE, NATURAL SOIL COMPOSED OF GRAVEL, SAND, OR SILTY OR CLAYEY GRAVEL AND SAND; FREE FROM DEBRIS, CONCRETE OR OTHER RUBBLE, ORGANIC MATTER, MUCK, PEAT, EXCAVATED ROCK AND BOULDERS OF 6 INCHES IN MAXIMUM DIMENSION OR GREATER.

2. COMMON FILL – SAME AS NOT 1 EXCEPT THIS LAYER SHALL BE FREE OF EXCAVATE ROCK OR STONES OF 4 INCH IN MAXIMUM DIMENSION OR GREATER

ROAD SURFACE RESTORATION NOTES:
1. WIDTH OF TRENCH AT STREET LEVEL SHALL BE KEPT AS NARROW AS POSSIBLE.

2. PAVEMENT UNDER THE ITEMS OF WORK SPECIFIED IN THE CONTRACT DOCUMENTS ARE TO THE LINES SHOWN.

3. DEPTHS OF GRAVEL SHOWN ARE MINIMUM COMPACTED THICKNESSES.

RCP PIPE TRENCH
NOT TO SCALE

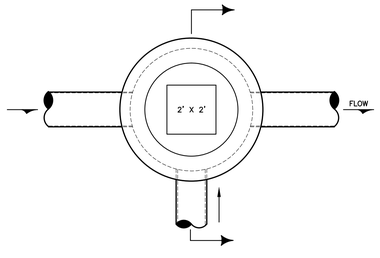

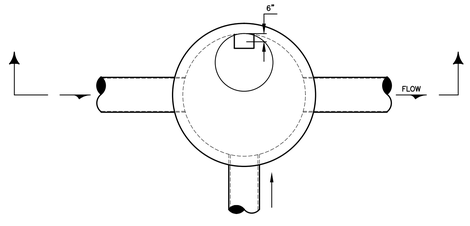

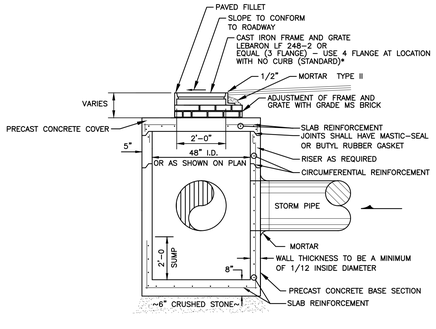

TYPICAL CATCH BASIN SECTION
NOT TO SCALE WITH VERTICAL CONCRETE CURB OR LOCATION WITH NO CURB

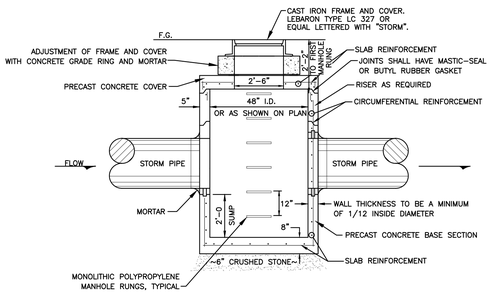

TYPICAL STORM MANHOLE SECTION
NOT TO SCALE

morris switzer
environments for health

Williston, Vermont
Boston, Massachusetts
Portland, Maine

185 Talcott Road
Williston, VT 05495
t 802.878.8841
f 802.878.9350

© 2011 MorrisSwitzer

morrisswitzer.com

Seals

Stantec

Stantec Consulting Services Inc.
55 Green Mountain Drive
South Burlington VT 05403 U.S.A.
Tel. 802.864.0223
Fax. 802.864.0165
www.stantec.com

Consultant

DD Approval Signature	Date

Project North

Key Plan N.T.S.

Revision	Date	No
SITE PERMIT APPLICATION	06.30.14	

Fletcher Allen HEALTH CARE
In alliance with The University of Vermont

INPATIENT BUILDING

MorrisSwitzer Project Number	201254
Drawn By	G. MERKLE
Date	30 JUNE 2014
Scale	NO SCALE

Sheet Title and Number

STORMWATER DETAILS

C-503

6/25/2014 10:07:27 AM

GENERAL NOTES AND SPECIFICATIONS FOR EROSION CONTROL

1. The contractor is responsible for water control during all phases of construction. No work shall be permitted in flowing water. Streams shall be temporarily dammed by use of sand bags or other suitable means. The diversion shall be accomplished by temporary culverts or by pumping. All diverted water shall be discharged to stone fill or other suitable energy dissipater surrounded by silt fence.

2. This plan is to be used as a guideline only. Additional silt fence, stone check dams, or other measures may be dictated by field conditions.

3. The Contractor is responsible for complying with all local, state, and federal regulations.

4. Clearing for Development Area

A. Delineate the limits of work with the continuous heavy duty flagging, construction fence, etc.

B. Install stabilization entrance where construction vehicles will access paved roadways from active construction areas.

C. Improve existing upgradient water bars or construct new water bars to divert upgradient runoff around the work. Temporally extend existing culverts as necessary.

D. Install silt fence and stone check dams as shown on the plan and as may be further required in the field.

E. Extend culverts as necessary and install stone outlet aprons.

F. Install permanent water bars or diversions to control runoff. Provide stable outfalls.

G. Seed and mulch all exposed areas as progress is made. Erosion prevention and sediment control measures shall remain in place until the site is stabilized. Measures are to be removed within thirty days of stabilization.

H. Sequence work <2 acre sections. Stabilize on section before moving to the next section.

5. Temporary Stabilization:

All disturbed areas shall have temporary or permanent stabilization within 14 days of initial disturbance. After this time any disturbance shall be stabilized by the end of the day, with the following exceptions:

(1) Stabilization is not required if work is to continue in the area in the next 24 hours and there is no precipitation forecast for the next 24 hours.

(2) Stabilization is not required if the work is in a self-contained excavation with a depth of 2 feet or more.

Temporary Stabilization Measures:

(1) Hay or straw mulch with a thickness of at least 2 inches.

(2) Soil tracking with tracked equipment. Should be limited to small areas with slopes less than 100 feet long (less than 50 feet with slopes steeper than 3:1)

(3) A combination of the above.

(4) Erosion control matting.

6. Materials

A. Mulch material: Select mulch material for erosion control that will best meet the site conditions from the following.

(1) Hay or straw – Shall be dry, free of mold and weed seeds. Hay or straw can be used on disturbed areas that will not be reworked for 7 to 30 days. Application rate of 100 lbs /1000 sq. ft.

(2) Wood Chips – Shall be dry, free of soil and other foreign material. Application rate of 500–900 lbs/1000 sq. ft.

(3) Rolled Erosion Control Products (RECP) – Shall be dry, and shall be made of straw or hay, coconut and related fibers, wood excelsior, jute, polypropylene, nylon, or an approved combination of different materials.

B. Mulch Anchoring: When mulch must be held in place, the following mulch anchoring material shall be used:

(1) Mulch Netting (Paper, twine, plastic, or plastic and wood fiber).

C. Fertilizer: Complete fertilizer 10–20–20 (Standard Product) – Class A
10–10–10 (Standard Product) – Class B

D. Lime: Ground limestone containing not less than 95% total carbonates (calcium or magnesium).

E. Temporary Seed Mixture: When it is impractical to establish permanent protective vegetation on disturbed earth by October 15, use "Conservation Mix" or the following seed mixture. Disturbed areas that will not be reworked for 30 days or more shall also receive temporary seed and mulch.

Kind of Seed:	% By Weight
Annual Ryegrass	50
Perennial Ryegrass	50

Apply seed mixture at 50 pounds per acre.

F. Permanent Seed Mixtures:

		% By Weight
(1)	Creeping Red Fescue	30%
	Tall Fescue	40%
	Birdsfoot Trefoil	10%
	Cereal Ryegrass	8%
	Red Top	10%
	Inert Matter, Crop Seed, Weed Seed	2%
	Total	100%

Apply seed mixture at 60 pounds per acre.

(2) Lawn:
Shall normally be used on loam areas and applied at 5 pounds/1000 square feet. This seed shall conform to the following.

Class A

Kind of Seed:	Percent of Mix
Kentucky Bluegrass	40%
Red Fescue	30%
Redtop	20%
Creeping Bentgrass	10%
Total	100%

G. Permanent seeding shall only be undertaken in the spring from April through May, and in the later summer and early fall until September 15th, except that permanent seeding may by undertaken during the summer months if there are plans to provide adequate watering. During the peak summer months and in the fall after September 15 temporary stabilization shall be specified.

7. Seeding and Mulching:

A. All areas shall be seeded and mulched within 48 hours of final grading.

B. Soil samples may be sent to the county extension service for analysis to determine the proper seed mixture and fertilizer requirements.

C. The following procedures shall be followed for temporary seeding:

(1) Apply lime at a rate of 75 to 100 pounds per 1000 square feet. Incorporate into top two inches of soil.

(2) Apply fertilizer at a rate of 30 pounds per 1000 square feet. Mix thoroughly into the top two inches of soil.

(3) Apply seed mixture at the rate shown in 6F evenly in two intersecting directions. Rake lightly.

(4) Apply mulch material within 24 hours after seeding in accordance with the following:

(A) Hay or Straw: Application rate – 75 to 100 pounds per 1000 square feet. Spread by hand or with machine. Anchor on slopes and where subject to blowing or slipping.

(B) Wood Chips – Application rate – Two to six inches deep. Use for tree and shrub planting.

(5) Anchor mulch on all slopes exceeding 5% and other areas as required using the following method:

(A) Mulch Netting: Spread over loose mulch and pin to the soil in accordance with the manufacturer's instructions.

D. When temporary seeding cannot be accomplished to have established or visible growth by October 15, the disturbed areas shall be covered with 6 inches of anchored mulch or erosion control blankets for the duration of the winter.

8. Maintenance of Erosion Control Structures:

A. Stone check dams shall be replaced when they become clogged with soil particles or as directed by the owner/representative.

B. When the sediment accumulation reaches a depth of 12 inches behind the silt fence, it shall be disposed of.

C. All sediment from sediment control practices as a part of maintenance shall be disposed of in an area that is:
a. Less than 5% in slope.
b. At least 100 feet from any down slope water body or conveyance to a water body, including storm drain inlets or ditchs.

D. Repair all damages caused by soil erosion or construction equipment at or before the end of each working day.

E. Stone stabilized construction entrances shall be inspected to ensure no tracking of soil onto public rights-of-way or streets. Maintenance may include periodic top dressing with additional aggregate to ensure a minimum thickness of eight inches.

F. All measures shall be removed within 30 days of final stabilization.

9. Winter Erosion Control

A. Authorization of all winter work (October 14 – April 15) requires the authorization of the Vermont water quality division.

B. All temporary erosion control features such as silt fence must be in place prior to the ground freezing.

C. All disturbed areas of the site shall be seeded and mulched from October 15 to April 15 regardless of whether final grading has been finished. The following winter erosion controls are to be implemented.

(1) Oat seeds shall be substituted for any other temporary annual grass seeds.

(2) All exposed earth shall be mulched with 6 inches of hay or straw. Slopes over 5% shall have an additional covering of staked jute mat or its equivalent.

C. The following maintenance items should be performed specifically for the various erosion control devices:

(1) Diversion Dike or Swale:
(A) Minimum inspection frequency – Weekly.
(B) Remove any flow blockage caused by ice or sediment.

(2) Mulch:
(A) Minimum inspection frequency – Daily.
(B) Replace mulch on any area where original mulch cover has been lost.

(3) Silt Fence:
(A) Minimum inspection frequency – Weekly.
(B) Clean and remove any collected sediment before predicted thaws or rainy periods.

(4) Stone Check Dam:
(A) Minimum inspection frequency – Weekly.
(B) Remove and replace clogged stone.

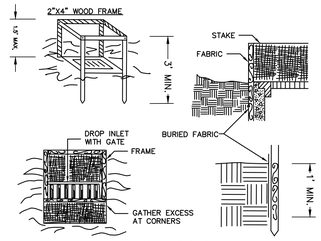

CONSTRUCTION SPECIFICATIONS

1. FILTER FABRIC SHALL HAVE AN EOS OF 40–85. BURLAP MAY BE USED FOR SHORT TERM APPLICATIONS.
2. CUT FABRIC FROM A CONTINUOUS ROLL TO ELIMINATE JOINTS. IF JOINTS ARE NEEDED THEY WILL BE OVERLAPPED TO THE NEXT STAKE.
3. STAKE MATERIALS WILL BE STANDARD 2" x 4" WOOD OR EQUIVALENT. METAL WITH A MINIMUM LENGTH OF 3 FEET.
4. SPACE STAKES EVENLY AROUND INLET 3 FEET APART AND DRIVE A MINIMUM 18 INCHES DEEP. SPANS GREATER THAN 3 FEET MAY BE BRIDGED WITH THE USE OF WIRE MESH BEHIND THE FILTER FABRIC FOR SUPPORT.
5. FABRIC SHALL BE EMBEDDED 1 FOOT MINIMUM BELOW GROUND AND BACKFILLED. IT SHALL BE SECURELY FASTENED TO THE STAKES AND FRAME.
6. A 2" x 4" WOOD FRAME SHALL BE COMPLETED AROUND THE CREST OF THE FABRIC FOR OVER FLOW STABILITY.

INLET PROTECTION DETAIL

NOT TO SCALE

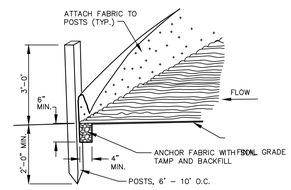

SILT FENCE DETAIL

NOT TO SCALE

NOTES:
1. POSTS FOR ATTACHING FABRIC TO BE PLACED A MINIMUM 6' FROM TOE OF THE SLOPE.

2. TO BE USED WHERE EXISTING GROUND SLOPES AWAY FROM THE TOE OF THE EMBANKMENT.

3. CONTRACTOR TO INSPECT THE SILT FENCE FREQUENTLY, AND REPAIR OR REPLACE ANY DAMAGED SECTIONS. REMOVE SILT FROM BEHIND THE FENCE WHEN IT HAS REACHED ONE-HALF THE HEIGHT OF THE FENCE, OR WHEN HEAVY RUNOFF OR SILTATION IS EXPECTED.

Practice	Weekly (April 16 – Oct. 14)	Daily (Oct. 15 – April 15)
Catch Basin Filter	X	X
Channel Linings, Embankments & Channel Beds	X	X
Cofferdam	X	X
Discharge Points	X	X
Diversion Dike / Swale	X	X
Erosion Control Fabric	X	X
Fertilizer	X	X
Mulch	X	X
Mulch Anchoring	X	X
On-Site Coordinator Reporting	X	X
Seeding	X	X
Silt Fence	X	X
Snow Fence/Limit of Disturbance	X	X
Stabilized Construction Entrance	X	X
Staging/Storage Area Stabilization	X	X
Stone Check Dam	X	X
Surface Roughening	X	X

NOTES:
1. The On-Site Coordinator shall inspect all erosion prevention and sediment control features per the table above, and within 24 hours of any storm resulting in a discharge of stormwater from the site.

2. During winter construction (October 15 – April 15) all measures shall be inspected daily in work areas and weekly in finished areas. Winter work requires the preparation of a Winter Erosion Prevention and Sediment Control Plan and the authorization of the Vermont Water Quality Division. This plan must be submitted for approval by September 15.

3. For final cleanup the coordinator shall ensure that all temporary measures have been removed within 30 days of final stabilization.

4. The On-Site Coordinator is required to prepare a weekly report summarizing the inspection of the erosion and sediment control features, as well as discussing the status of site grading and stabilization efforts, releases of sediment, and the actions taken to address the release. The Vermont Water Quality Division shall be notified immediately (within 24 hours by phone, email or fax) of any release of sediment exceeding Vermont Water Quality Standards. A written report fully describing the condition, including the source, cause, why the implementation of the EPSC Plan did not prevent the problem, how the problem was addressed, and a time table describing when the violation occurred and when corrective action was taken shall be filed within seven (7) days of when the problem is first identified.

EROSION CONTROL CHART OF INSPECTION

morris switzer
environments for health

Williston, Vermont
Boston, Massachusetts
Portland, Maine

185 Talcott Road
Williston, VT 05495
t 802.878.8841
f 802.878.9350

morrisswitzer.com

© 2011 MorrisSwitzer

Seals

Stantec

Stantec Consulting Services Inc.
55 Green Mountain Drive
South Burlington VT 05403 U.S.A.
Tel. 802.864.0223
Fax. 802.864.0165
www.stantec.com

Consultant

DD Approval Signature | Date

Project North

Key Plan N.T.S.

Revision	Date	No.
SITE PERMIT APPLICATION	06.30.14	

Fletcher Allen HEALTH CARE
In alliance with The University of Vermont

INPATIENT BUILDING

MorrisSwitzer Project Number	201254
Drawn By	G. MERKLE
Date	30 JUNE 2014
Scale	NO SCALE

Sheet Title and Number

EROSION CONTROL DETAILS

C-504

6/25/2014 10:07:27 AM

NOTES:

GENERAL:

ALL DIMENSIONS IN INCHES.

OPTICALLY CENTER SYMBOLS WITHIN SECTIONS UNLESS OTHER NOTED.

THESE SIGNS ARE INTENDED FOR GROUND MOUNTING ONLY.

COLORS:

THE REGULATORY SIGNS SHOWN ON SHEETS C8.3 & C8.4 SHALL HAVE BLACK TEXT ON REFLECTORIZED WHITE BACKGROUND UNLESS OTHERWISE NOTED. THE WARNING SIGNS SHOWN ON C8.3 & C8.4 SHALL HAVE BLACK TEXT AND SYMBOLS ON REFLECTED YELLOW BACKGROUNDS EXCEPT AS OTHERWISE NOTED. THE COLORS SHALL CONFORM WITH THE COLORS ADOPTED BY THE AMERICAN ASSOCIATION OF STATE HIGHWAY AND TRANSPORTATION OFFICIALS AND APPROVED BY THE DEPARTMENT OF TRANSPORTATION, FEDERAL HIGHWAY ADMINISTRATION.

MATERIALS:

THE SIGN BASE MATERIALS USED FOR REGULATORY SIGNS AND WARNING SIGNS SHOWN ON SHEETS C8.3 & C8.4 MAY BE ANY OF THE FOLLOWING OF THE MINIMUM THICKNESS NOTED.

	12" X 12" 18" X 18"	24" X 24" 30" X 18" 30" X 30"	36" X 12" 36" X 24" 36" X 36" 42" X 30" 48" X 48"
FLAT SHEET ALUMINUM	0.060"	0.080"	0.100"
HIGH DENSITY OVERLAID PLYWOOD	1/2"	1/2"	5/8"
GALVANIZED FLAT SHEET STEEL	18 GAGE	16 GAGE	14 GAGE

THE REFLECTIVE MATERIAL FOR GROUND MOUNTED RUGULATORY SIGNS SHALL BE AASHTO TYPE II OR III WHITE REFLECTIVE SHEETING APPLIED TO THE ENTIRE BACKGROUND OF THE SIGN. THE TEXT PORTIONS OF THE SIGNS MAY BE LETTERING FILM, SILK SCREENED OR HAND PAINTED. HAND PAINTING MUST BE COMPARABLE IN QUALITY TO THE RESULTS OBTAINED BY SILK SCREENING. ENCAPSULATED LENS REFLECTIVE SHEETING SHALL BE USED FOR THE SIGN BACKGROUND WHERE NOTED.

SPECIFICATIONS:

REGULATORY & WARNING SIGNS SHALL MEET THE VERMONT STANDARD SPECIFICATIONS FOR TRAFFIC SIGNS.

TEXT DESIGN:

LETTERS, DIGITS, ARROWS, SPACING AND TEXT DIMENSIONS SHALL CONFORM WITH THE "STANDARD ALPHABET FOR HIGHWAY SIGNS AND PAVEMENT MARKINGS" AND DESIGNS PRE-SCRIBED IN THE STANDARD HIGHWAY SIGNS AS SPECIFIED IN THE MANUAL ON UNIFORM TRAFFIC CONTROL DEVICES.

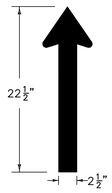

REGULATORY SIGN INFORMATION DETAIL
NOT TO SCALE

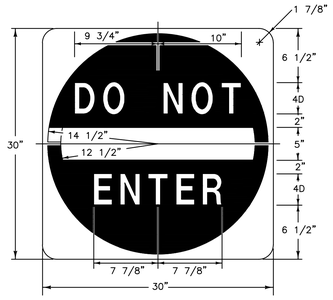

COLORS
SYMBOL – RED (REFL)
LEGEND AND BACKGROUND – WHITE (REFL)
ENCAPSULATED LENS

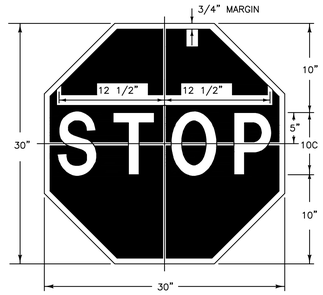

COLORS
LEGEND – WHITE (REFL)
BACKGROUND – RED (REFL)
ENCAPSULATED LENS

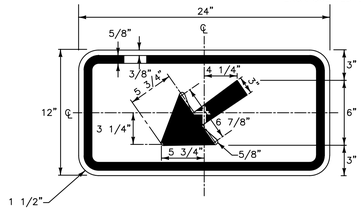

W16–7P

BLACK BORDER & SYMBOL
WITH REFLECTORIZED FLUORESCENT YELLOW – GREEN BACKGROUND
SEE SHEET PM.6 FOR MATERIALS

REGULATORY SIGN DETAILS
NOT TO SCALE

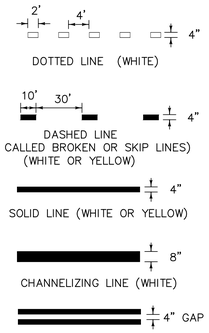

PAVEMENT MARKING LINES DETAIL
NOT TO SCALE

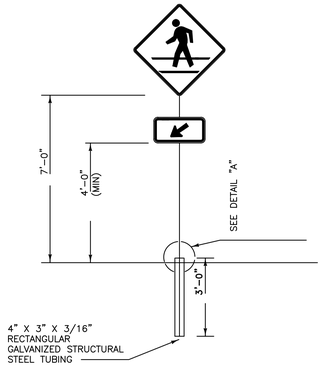

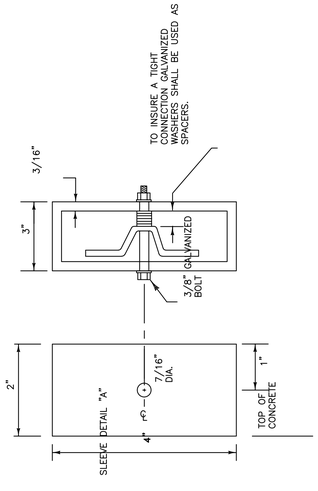

SLEEVE FOR SIGN POSTS INSTALLED DETAIL
NOT TO SCALE
IN CONCRETE OR PAVEMENT

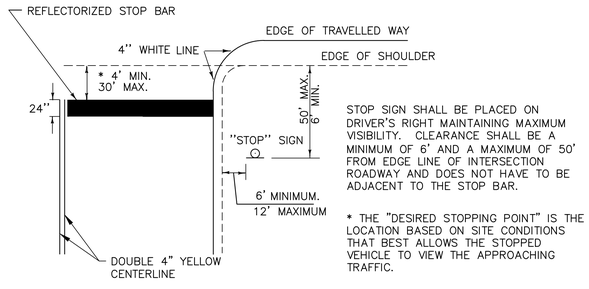

STOP SIGN SHALL BE PLACED ON DRIVER'S RIGHT MAINTAINING MAXIMUM VISIBILITY. CLEARANCE SHALL BE A MINIMUM OF 6' AND A MAXIMUM OF 50' FROM EDGE LINE OF INTERSECTION ROADWAY AND DOES NOT HAVE TO BE ADJACENT TO THE STOP BAR.

* THE "DESIRED STOPPING POINT" IS THE LOCATION BASED ON SITE CONDITIONS THAT BEST ALLOWS THE STOPPED VEHICLE TO VIEW THE APPROACHING TRAFFIC.

STOP BAR LAYOUT

STOP BAR LAYOUT DETAIL
NOT TO SCALE

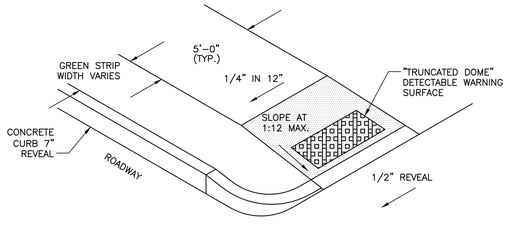

TYPICAL CURB AND SIDEWALK TERMINATION
NOT TO SCALE

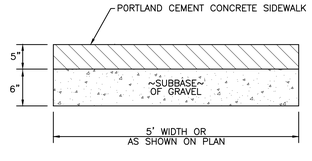

SIDEWALK DETAIL
NOT TO SCALE

morris switzer
environments for health

Williston, Vermont
Boston, Massachusetts
Portland, Maine

185 Talcott Road
Williston, VT 05495
t 802.878.8841
f 802.878.9350

© 2011 MorrisSwitzer

morrisswitzer.com

Seals

Stantec

Stantec Consulting Services Inc.
55 Green Mountain Drive
South Burlington VT 05403 U.S.A.
Tel. 802.864.0223
Fax. 802.864.0165
www.stantec.com

Consultant

DD Approval Signature	Date

Project North

Key Plan N.T.S.

Revision	Date	No
SITE PERMIT APPLICATION	06.30.14	

Fletcher Allen HEALTH CARE
In alliance with The University of Vermont

INPATIENT BUILDING

MorrisSwitzer Project Number	201254
Drawn By	G. MERKLE
Date	30 JUNE 2014
Scale	NO SCALE
Sheet Title and Number	

GENERAL DETAILS

C-505

6/25/2014 10:07:27 AM

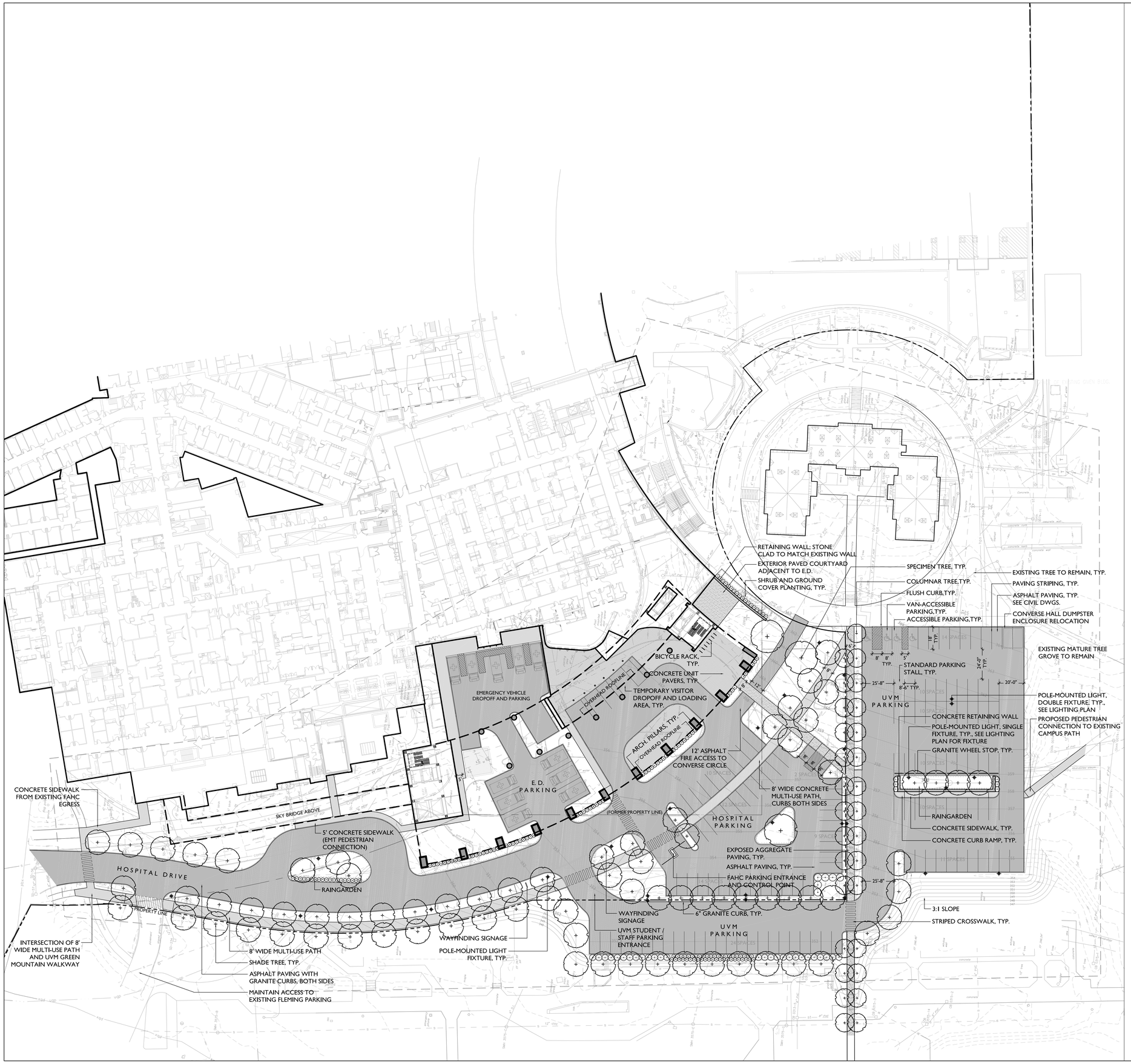

GENERAL NOTES

1. Contractor is responsible for all damage due to his operations inside and outside the contract limit line.
2. Contractor is responsible for checking spot elevations and verifying proposed grades by providing grade stakes. Grades must be approved by Landscape Architect prior to proceeding.
3. Contractor shall blend new work smoothly with existing grades at contract limit line and/or limit of construction line.
4. Contractor to verify that subgrades are 6 inches below finished grade prior to spreading top soil for seeded areas.
5. All walks shall have 2% cross pitch, and all step treads and wall caps shall have 1% cross pitch unless otherwise noted.
6. Light fixture locations may be field adjusted with prior Landscape Architect approval.
7. Walkway layout to be approved by Landscape Architect prior to construction.
8. Site furniture and wall locations to be verified by Landscape Architect prior to installation.
9. General Contractor is responsible for all erosion control measures during construction.
10. It is the intent of this contract to avoid any disturbance to existing trees or shrubs on site other than those specifically designated for transplant or removal.
11. Liquidated damages for trees damaged by construction operation shall be $500 per caliper inch. Shrubs shall be $100 each.

morris switzer
environments for health

Williston, Vermont
Boston, Massachusetts
Portland, Maine

185 Talcott Road
Williston, VT 05495
t 802.878.8841
f 802.878.9350

© 2011 MorrisSwitzer

morrisswitzer.com

Seals

WAGNERHODGSON
LANDSCAPE ARCHITECTURE
T802.864.0010 F802.864.6267 www.wagnerhodgson.com

Consultant

DD Approval Signature	Date

Project North

Key Plan N.T.S.

Revision	Date	No
SITE PERMIT APPLICATION	6.30.14	

Fletcher Allen HEALTH CARE
In alliance with The University of Vermont

INPATIENT BUILDING

MorrisSwitzer Project Number	201254
Date	30 JUNE 2014
Scale	1" = 30'-0"

Sheet Title and Number

LAYOUT AND MATERIALS PLAN

L1-0

PLANT SCHEDULE

KEY	QTY.	SCIENTIFIC NAME	COMMON NAME	SIZE	SPACING
DECIDUOUS AND EVERGREEN TREES					
AF	21	Acer x 'Freemanii'	FREEMAN MAPLE	4" CAL.	AS SHOWN
AR	7	Acer rubrum	RED MAPLE	4" CAL.	AS SHOWN
CB	29	Carpinus betulus 'Fastigiata'	FASTIGIATA EUROPEAN HORNBEAM	4" CAL.	AS SHOWN
GT	18	Gleditsia triacanthos 'Shademaster'	SHADEMASTER HONEYLOCUST	4" CAL.	AS SHOWN
PO	3	Platanus occidentalis	SYCAMORE	4" CAL.	AS SHOWN
QB	10	Quercus bicolor	SWAMP WHITE OAK	4" CAL.	AS SHOWN
SJ	20	Sophora japonica	JAPANESE PAGODA TREE	4" CAL.	AS SHOWN
UA	2	Ulmus x 'Accolade'	ACCOLADE ELM	4" CAL.	AS SHOWN
SHRUBS					
CA	37	Cornus alba 'Sibirica'	SIBIRICA REDTWIG DOGWOOD	#3	3' O.C.
CS	27	Cornus sericea 'Alleman's Compacta'	ALLEMAN'S COMPACT DOGWOOD	#3	5' O.C.
IG	131	Ilex glabra 'Shamrock'	INKBERRY	#3	3' O.C.
RA	152	Rhus aromatica 'Gro-Low'	GRO LOW SUMAC	#3	4' O.C.
SP	7	Syringa patula 'Miss Kim'	MISS KIM LILAC	#3	6' O.C.
ORNAMENTAL GRASSES					
CK	63	Calamagrostis x acutiflora 'Karl Foerster'	FEATHER REED GRASS	#3	3' O.C.
RAINGARDEN MIX					
AC		Acorus calamus	SWEET FLAG	PLUGS	12" O.C.
AT		Asclepias tuberosa	BUTTERFLY WEED	PLUGS	12" O.C.
CB		Carex bicknellii	BICKNELL'S SEDGE	PLUGS	12" O.C.
CS		Carex stricta	TUSSOCK SEDGE	PLUGS	12" O.C.
ED		Eupatorium dubium 'Little Joe'	LITTLE JOE PYE WEED	PLUGS	12" O.C.
IV		Iris versicolor	BLUEFLAG IRIS	PLUGS	12" O.C.
JE		Juncus effusus	SOFT RUSH	PLUGS	12" O.C.
LC		Lobelia cardinalis	CARDINAL FLOWER	PLUGS	12" O.C.
PH		Panicum virgatum 'Heavy Metal'	HEAVY METAL SWITCHGRASS	PLUGS	18" O.C.
PS		Panicum virgatum 'Shenandoah'	SHENANDOAH SWITCHGRASS	PLUGS	18" O.C.
RF		Rudbeckia fulgida 'Goldsturm'	BLACKEYED SUSAN	PLUGS	18" O.C.

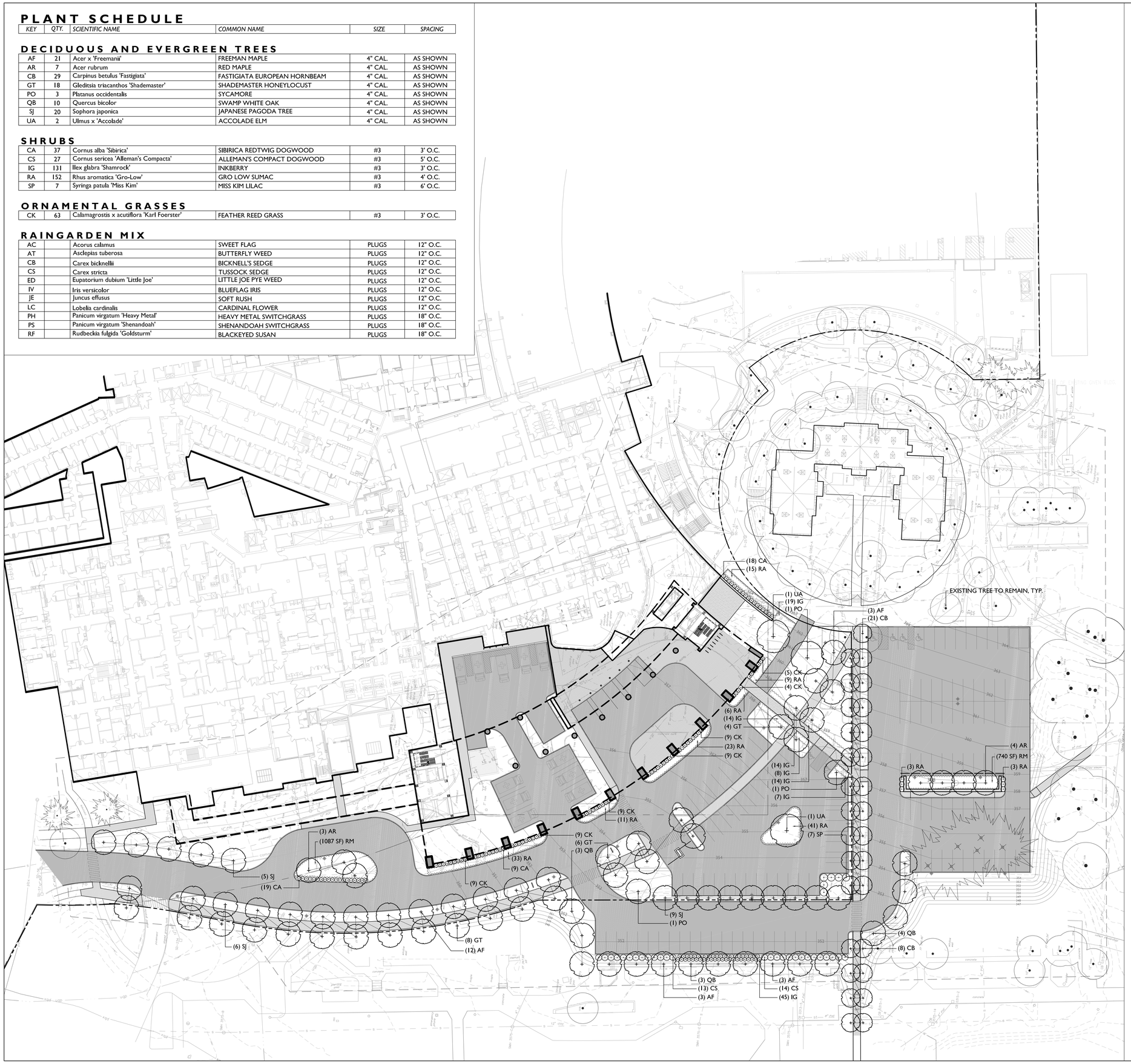

PLANTING NOTES

1. All plant material in the plant schedule shall be nursery grown in accordance with ANSI in accordance with Z.60.1 Standards for measurement of nursery stock.
2. All plants shall be guaranteed by the Contractor for a period of one year from date of receipt of Provisional Acceptance of the completed installation by the Owner.
3. Replacement plantings will be required prior to Final Acceptance for any plants which are missing, not true to specifications, have died or are unhealthy or uncharacteristic of the species (due to excessive pruning, dieback or other reasons).
4. All plant materials shall be selected and tagged at the nursery by Landscape Architect.
5. The Landscape Architect's approval is required for any plant material substitutions.
6. The Contractor is responsible for immediately notifying the Landscape Architect if any plant quantity discrepancies exist between the planting plan and the plant list.
7. All shrubs and trees will be sprayed with the anti-desiccant "Wilt-Pruf" (or approved equal) prior to the first Winter (no later that November 30).
8. The Landscape Contractor shall have the General Contractor locate all underground utilities in areas to be landscaped prior to commencing any excavation. Adjustments to tree locations will be allowed where utility conflicts are clearly a problem and with prior site approval by Landscape Architect.
9. All plant bed, shrub and tree location shall be staked in the field by Contractor for Landscape Architects approval prior to installation.
10. Adjustments to plant beds shall be approved by Landscape Architect.
11. General Contractor is responsible for all erosion control measures during construction.
12. All disturbed areas are to be topsoiled and seeded or sodded, as indicated in the planting plan.
13. Mulch shall consist of double-shredded hardwood mulch or approved equal and Contractor is responsible for providing samples of mulch to Landscape Architect. Mulch plant materials as shown on plan and details.
14. It is the intent of this contract to avoid any disturbance to existing trees or shrubs on site other than those specifically designated for transplant or removal.
15. Liquidated damages for trees damaged by construction operation shall be $500 per caliper inch. Shrubs shall be $100 each.
16. During construction, and until the end of warranty period, existing trees that are showing signs of stress as determined by the Landscape Architect are to be deep root fertilized, two injections per caliper inch per tree at 18" - 24" depth with Peter's 20/20/20 fertilizer or Landscape Architect approved equal.
17. Contractor is responsible for verifying and confirming all plant counts as supplied by the Landscape Architect with field conditions as constructed. Any discrepancies shall be reported to Landscape Architect for approval and direction.
18. Tree transplanting shall be performed by a suitable hydraulic tree spade, sized as necessary to peform the work.
19. Prior to commencement of any construction, all existing trees to remain shall receive tree protection fence at outer edge of dripline whenever possible.

TREE PROTECTION NOTES

1. Proposed methods, and schedule for effecting tree and plant protection shall be submitted for approval.
2. Proposed methods, materials, and schedule for root pruning, construction pruning, and tree fertilization shall be submitted for approval.
3. Certain specimen trees adjacent to construction areas and in other key locations will be identified by the Owner and the Architect, and marked with red tags. Loss of any of these trees will result in fines assessed at $5,000 per tree. Damage to all other trees on the property will be assessed at the rate of $500 per inch caliper of the tree.
4. A fine of $1,000 will be levied against the Contractor for each incident of construction inside tree protection areas.
5. Damages to trees, shrubs, and other vegetation will be assessed by the Architect and Owner in accordance with the International Society of Arboriculture (ISA) Guide.
6. Trees or roots visibly damaged will cause the Owner to withhold from the Contractor an assessed amount conforming to the requirements stipulated above for a period of two years. After that period the impact of the damaged to any tree will be assessed accordingly.
7. If any trees or shrubs designated to be saved are damaged and replacement is required, a number and diameter of trees or shrubs of the same species and variety, as specified by the Owner and Architect, shall be furnished and planted by the Contractor. The total inch diameter of the replacement trees or shrubs shall equal the diameter of the tree or shrub to be replaced. The Contractor shall not be liable for any loss or damage which occurs while the Contractor is complying with instructions given by the Owner, Architect, or arborist working on the Project.
8. The Contractor's attention is called to the fact that certain areas on the site exist as natural woodland spaces and are to remain as natural woodlands. Therefore, all construction operations must be performed in such a manner, which will preserve these existing natural environments as wood preserves.
9. Designated areas of trees, understory, and wildflowers are to remain untouched and unharmed.
11. Clearly mark all clearing limits in the field and accompany Architect on a joint review of clearing limits before clearing operations have commenced. Limit of clearing is generally defined as the limit of grading.
12. Galvanized chain link fencing, 4 feet high. Stakes for fencing shall be 8 feet galvanized steel posts, driven a minimum of 3 feet into the ground. Posts shall be spaced 10 feet on center maximum.
13. Prior to start of demolition work and clearing and grubbing operations, tree protection fencing shall be installed in accordance with the following:
14. Fencing shall be installed at the tree protection areas indicated on the Drawings.
15. Fencing shall be installed a minimum of 15 feet beyond the drip line of the trees to be protected, unless otherwise approved by the Architect.
16. Where construction will be in close proximity to existing trees designated to remain, roots shall be pruned. Proximity shall be as determined in the field by the Landscape Architect or Arborist.
17. Suitable means for root pruning include,trenching, vibrating plow, and water jet pruning. Any method which tears roots or disturbs the soil beyond the grading limit is unacceptable.
18. Trees to receive root pruning shall be reviewed by an arborist for canopy pruning, fertilization and trench backfill recommendations.
19. Selective clearing within tree protection areas shall only be performed when and as directed by the Landscape Architect. Refer to Section 02115, selective clearing.
20. Except as otherwise indicated or requested by Landscape Architect, temporary protection devices and facilities installed during course of the work shall be removed only after all work which may injure or damage trees and plants is completed.

morris switzer
environments for health

Williston, Vermont
Boston, Massachusetts
Portland, Maine

185 Talcott Road
Williston, VT 05495
t 802.878.8841
f 802.878.9350
morrisswitzer.com

© 2011 MorrisSwitzer

Seals

WAGNERHODGSON
LANDSCAPE ARCHITECTURE
T802.864.0010 F802.864.6267 www.wagnerhodgson.com

Consultant

DD Approval Signature	Date

Project North

Key Plan N.T.S.

Revision	Date	No
SITE PERMIT APPLICATION	6.30.14	

Fletcher Allen HEALTH CARE
In alliance with The University of Vermont

INPATIENT BUILDING

MorrisSwitzer Project Number	201254
Date	30 JUNE 2014
Scale	1" = 30'-0"
Sheet Title and Number	

PLANTING PLAN

L2-0

SHADE CALCULATIONS

KEY	QTY.	SCIENTIFIC NAME	COMMON NAME

SUN ANGLE CALCULATION DATA

LONGITUDE:	72D 6' 8' WEST
LATITUDE:	45D 0' 4' NORTH
CALCULATION DATE:	SUMMER SOLSTICE
TIME:	SOLAR NOON (11:45 AM, EST)
RESULTING SUN ALTITUDE ANGLE:	66.13°

SHADE TOTALS

TOTAL SHADE PROVIDED ON FAHC PARKING:	4144 SF (32% OF PAVED AREA)
TOTAL SHADE PROVIDED ON UVM PARKING:	5980 SF (24% OF PAVED AREA)

TREE SIZING (COLUMNAR TREE):	35' HEIGHT, 15' DIAMETER
TREE SIZING (SHADE TREE):	40' HEIGHT, 20' DIAMETER
TREE SIZING (SPECIMEN TREE):	45' HEIGHT, 27' DIAMETER

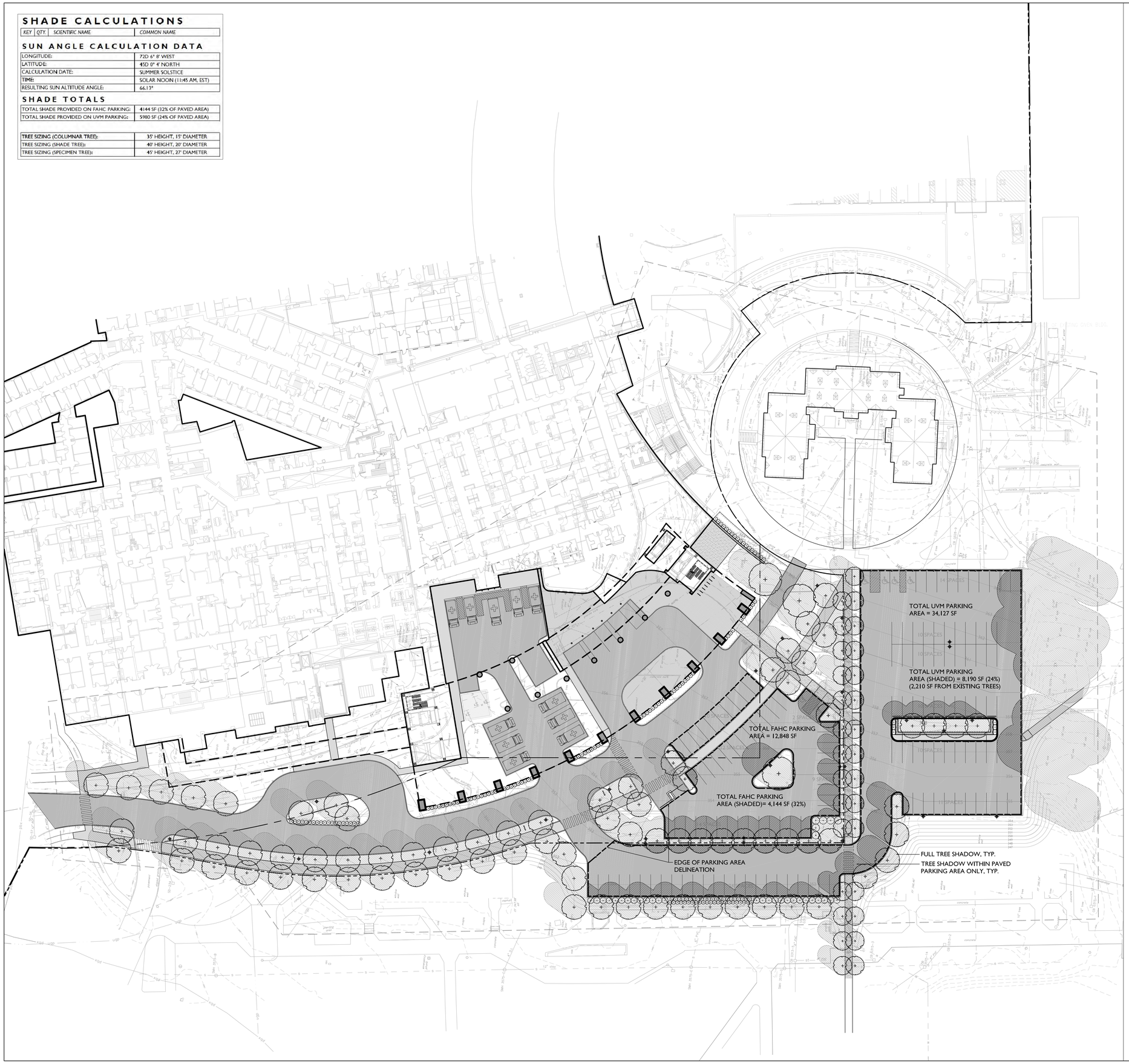

morris switzer
environments for health

Williston, Vermont
Boston, Massachusetts
Portland, Maine

185 Talcott Road
Williston, VT 05495
t 802.878.8841
f 802.878.9350
morrisswitzer.com

© 2011 MorrisSwitzer

Seals

WAGNERHODGSON
LANDSCAPE ARCHITECTURE
T802.864.0010 F802.864.6267 www.wagnerhodgson.com

Consultant

DD Approval Signature | Date

Project North

Key Plan N.T.S.

Revision	Date	No
SITE PERMIT APPLICATION	6.30.14	

Fletcher Allen HEALTH CARE
In alliance with The University of Vermont

INPATIENT BUILDING

MorrisSwitzer Project Number	201254
Date	30 JUNE 2014
Scale	1" = 30'-0"

Sheet Title and Number

TREE SHADING PLAN

L3-0