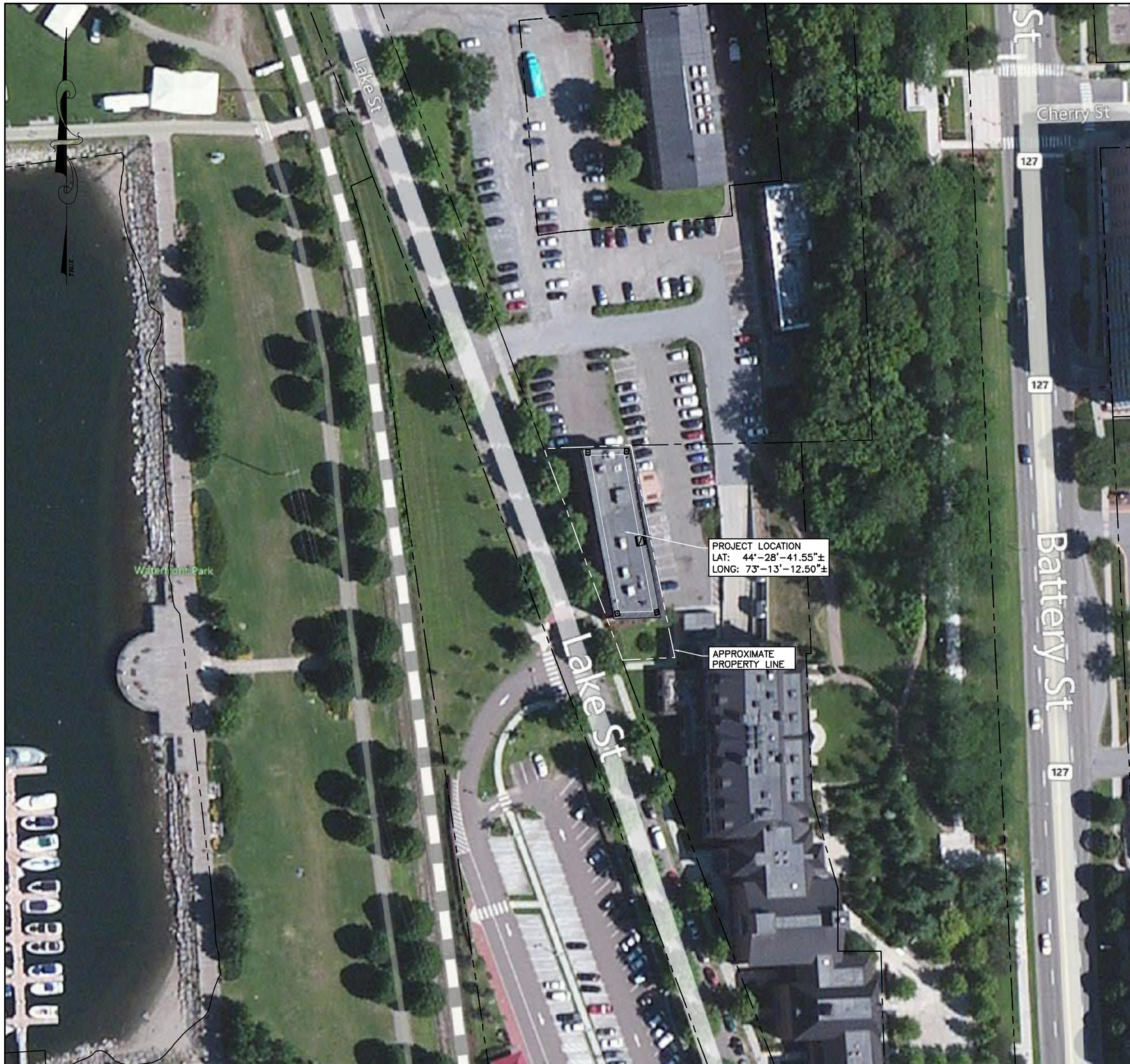

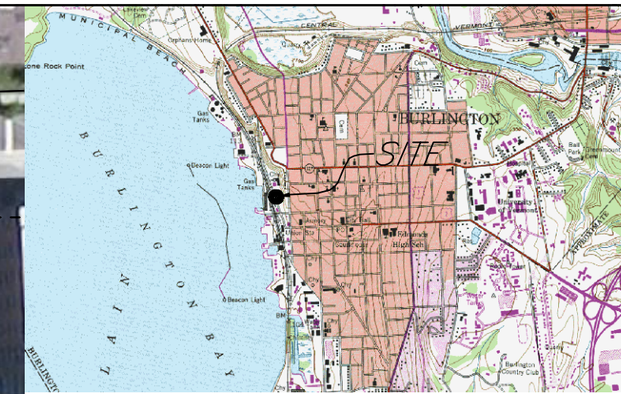

LOCATION MAP
NOT TO SCALE

NOTES:

1. PROPERTY OWNERS: LAKE STREET ASSOCIATES
2. LOCATION (CENTER OF ROOF)
   LATITUDE: 44°-28'-41.55"
   LONGITUDE: 73°-13'-12.50"
3. APPLICANT: NYNEX MOBILE LIMITED PARTNERSHIP 1 AND CELLCO PARTNERSHIP
   EACH D/B/A VERIZON WIRELESS
   C/O BRIAN SULLIVAN, ESQ., MURPHY SULLIVAN KRONK
   P.O. BOX 4485, 275 COLLEGE STREET
   BURLINGTON, VT 05401-4485 802-861-7000
4. ENGINEER: DUBOIS & KING, INC., 6 GREEN TREE DRIVE
   SOUTH BURLINGTON, VT 05403 802-878-7661
5. ZONING DISTRICT: MIXED USE - DOWNTOWN WATERFRONT
6. ADD PROPOSED USE: VERIZON WIRELESS: UNATTENDED TELECOMMUNICATIONS FACILITY. (1-2) VISITS PER MONTH BY TECHNICIAN. NO WATER OR SEWER SERVICES REQUIRED.
7. PROPERTY BOUNDARIES SHOWN ARE APPROXIMATE AS PROVIDED BY CITY OF BURLINGTON TAX MAPS. DUBOIS & KING, INC. DID NOT PERFORM A BOUNDARY SURVEY.
8. GPS SURVEY PERFORMED BY DUBOIS & KING ON 4/15/2014.
9. ELEVATIONS FROM GPS OBSERVATIONS.

GRAPHIC SCALE
40 0 20 40 80 160
(IN FEET)
1 inch = 40 ft. AT 24X36
HALF SIZE AT 11X17

DuBois & King inc.
ENGINEERING • PLANNING • MANAGEMENT • DEVELOPMENT
6 GREEN TREE DRIVE
SO. BURLINGTON, VT 05403
TEL: (802) 878-7661
FAX: (866) 783-7101
www.dubois-king.com
RANDOLPH, VT
SPRINGFIELD, VT
BEDFORD, NH
LACONIA, NH
© Copyright 2014 Dubois & King Inc.

PROFESSIONAL SEAL

NOT FOR CONSTRUCTION PRELIMINARY PLANS

NO.	DATE	DESCRIPTION	BY	CK'D
4	7-24-15	REVISED PER BURLINGTON COMMENTS	GJO	LJH
3	4-22-15	REVISED ANTENNA CONFIGURATION	JWP	LJH
2	6/25/14	ADDED NORTH AND EAST ELEVATIONS	TJD	LJH
1	3/17/14	REVISED ANTENNA CONFIGURATION	TJD	LJH

verizon wireless

PROJECT ID: 20130951131
PROJECT TYPE: BDGCA
LOCATION CODE: 275570

BURLINGTON WATERFRONT

86 LAKE STREET
BURLINGTON, VT
05401

SHEET TITLE

OPTION 2
OVERALL
SITE PLAN

PERMIT PLANS

DRAWN BY	DATE
TJD	OCT. 2014
CHECKED BY	D&K PROJECT #
LJH	422339P
PROJ. ENG.	D&K ARCHIVE#
AWD	8158

SHEET NUMBER

C-1

SHEET 1 OF 5

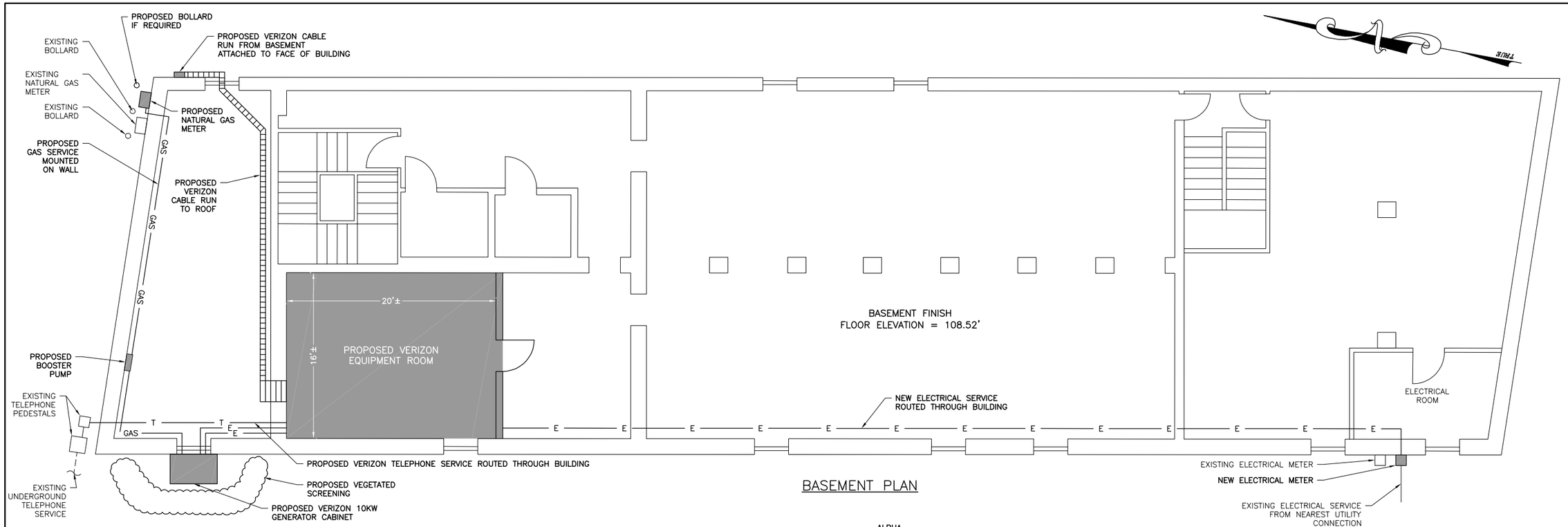

BASEMENT PLAN

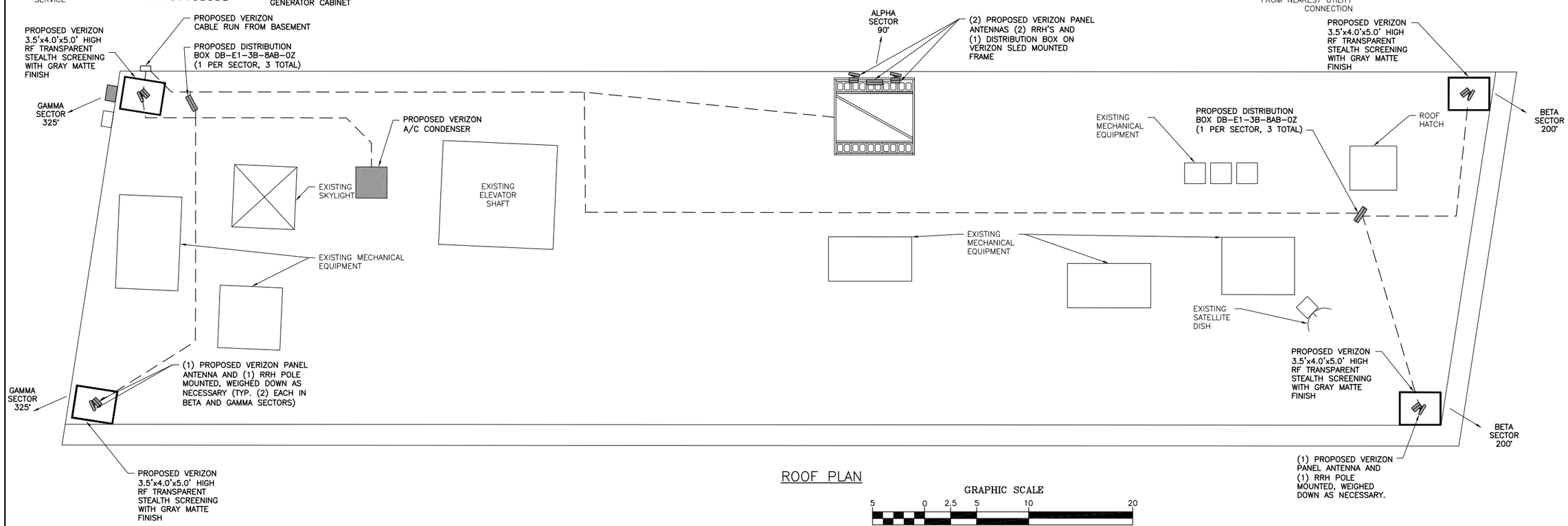

ROOF PLAN

GRAPHIC SCALE

5 0 2.5 5 10 20

(IN FEET)
1 inch = 5 ft. AT 24X36
HALF SIZE AT 11X17

DuBois & King inc.
ENGINEERING • PLANNING • MANAGEMENT • DEVELOPMENT
6 GREEN TREE DRIVE
SO. BURLINGTON, VT 05403
TEL: (802) 878-7661
FAX: (866) 783-7101
www.dubois-king.com
RANDOLPH, VT
SPRINGFIELD, VT
BEDFORD, NH
LACONIA, NH

© Copyright 2014 Dubois & King Inc.

PROFESSIONAL SEAL

NOT FOR CONSTRUCTION PRELIMINARY PLANS

NO.	DATE	DESCRIPTION	BY	CK'D
4	7-24-15	REVISED PER BURLINGTON COMMENTS	GJO	LJH
3	4-22-15	REVISED ANTENNA CONFIGURATION	JWP	LJH
2	6/25/14	ADDED NORTH AND EAST ELEVATIONS	TJD	LJH
1	3/17/14	REVISED ANTENNA CONFIGURATION	TJD	LJH

verizon wireless

PROJECT ID: 20130951131
PROJECT TYPE: BDGCA
LOCATION CODE: 2f75570

BURLINGTON WATERFRONT

86 LAKE STREET
BURLINGTON, VT
05401

SHEET TITLE

OPTION 2
BASEMENT
AND ROOF
PLANS

PERMIT PLANS

DRAWN BY	DATE
TJD	OCT. 2014
CHECKED BY	D&K PROJECT #
LJH	422339P
PROJ. ENG.	D&K ARCHIVE #
AWD	8159

SHEET NUMBER

C-2

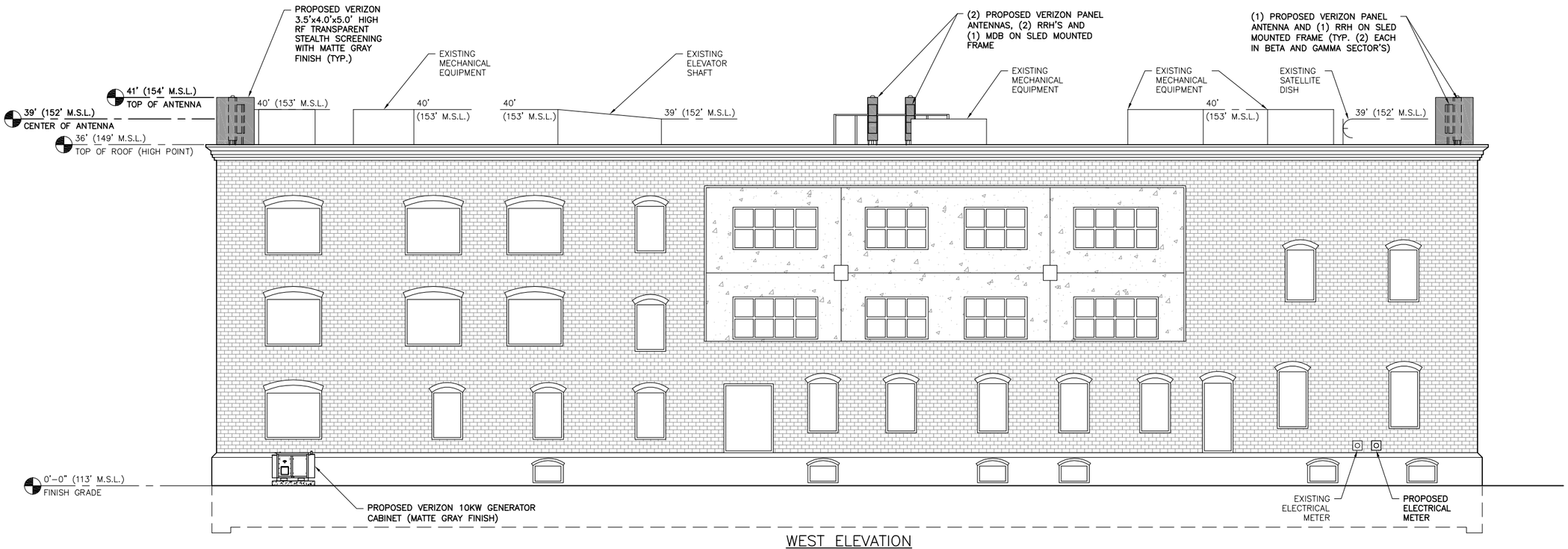

WEST ELEVATION

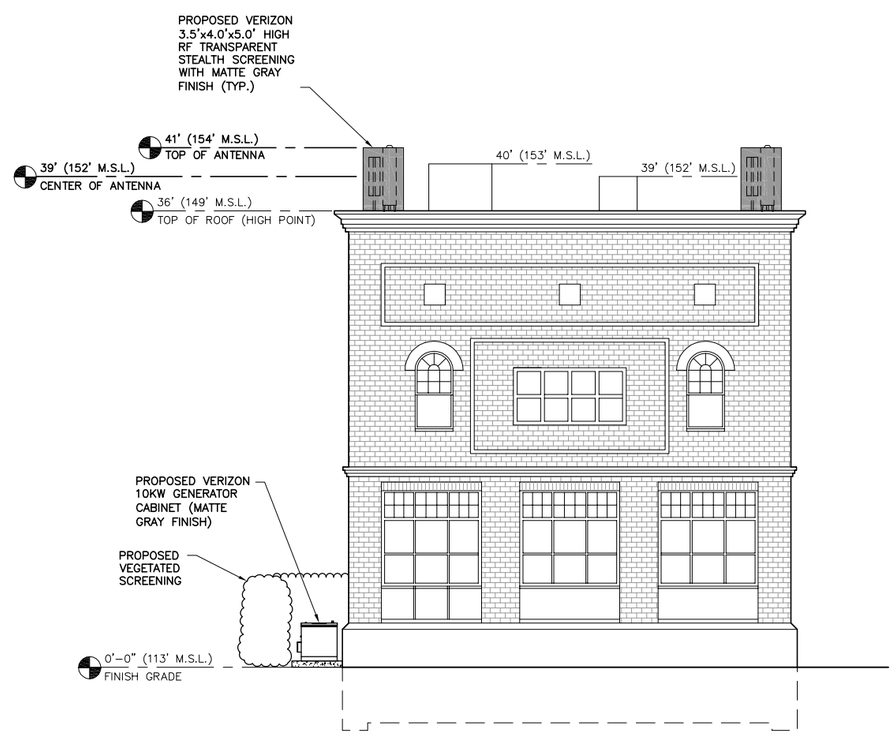

SOUTH ELEVATION

GRAPHIC SCALE

5 0 2.5 5 10 20

(IN FEET)
1 inch = 5 ft. AT 24X36
HALF SIZE AT 11X17

DuBois & King inc.
ENGINEERING • PLANNING • MANAGEMENT • DEVELOPMENT
6 GREEN TREE DRIVE
SO. BURLINGTON, VT 05403
TEL: (802) 878-7661
FAX: (866) 783-7101
www.dubois-king.com
RANDOLPH, VT
SPRINGFIELD, VT
BEDFORD, NH
LACONIA, NH

© Copyright 2014 Dubois & King Inc.

PROFESSIONAL SEAL

NOT FOR CONSTRUCTION PRELIMINARY PLANS

NO.	DATE	DESCRIPTION	BY	CK'D
4	7-24-15	REVISED PER BURLINGTON COMMENTS	GJO	LJH
3	4-22-15	REVISED ANTENNA CONFIGURATION	JWP	LJH
2	6/25/14	ADDED NORTH AND EAST ELEVATIONS	TJD	LJH
1	3/17/14	REVISED ANTENNA CONFIGURATION	TJD	LJH

verizon wireless

PROJECT ID: 20130951131
PROJECT TYPE: BDGCA
LOCATION CODE: 275570

BURLINGTON WATERFRONT

86 LAKE STREET
BURLINGTON, VT
05401

SHEET TITLE

OPTION 2
BUILDING
ELEVATIONS

PERMIT PLANS

DRAWN BY	DATE
TJD	OCT. 2014
CHECKED BY	D&K PROJECT #
LJH	422339P
PROJ. ENG.	D&K ARCHIVE #
AWD	8160

SHEET NUMBER

C-3

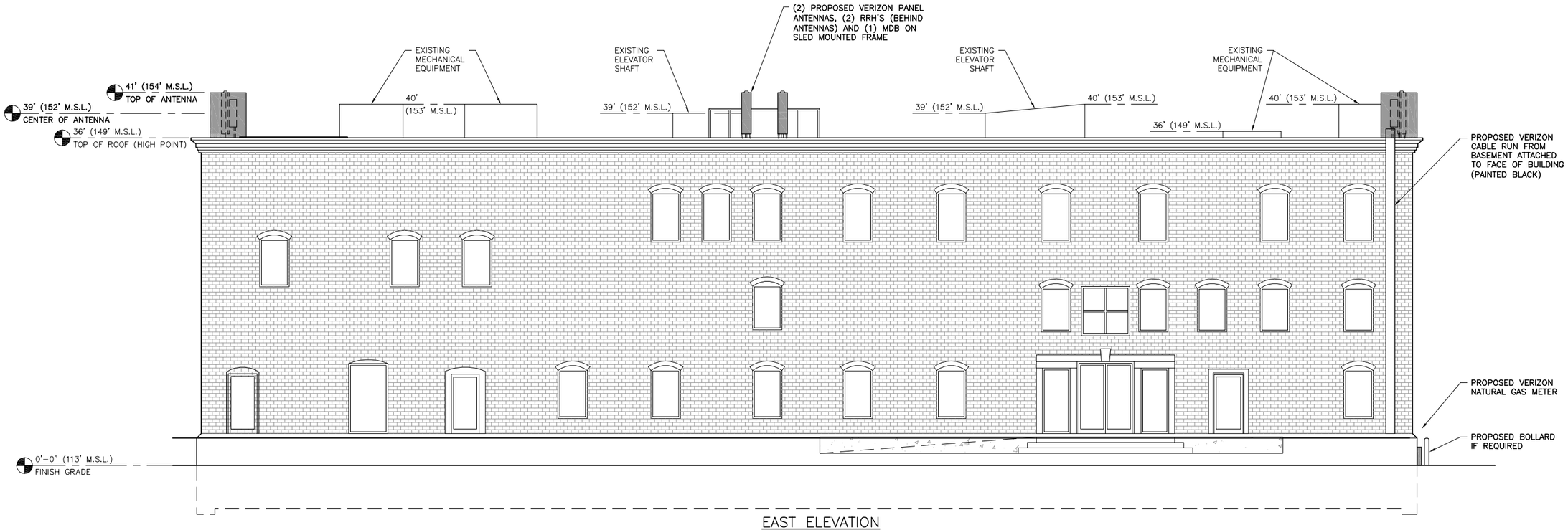

EAST ELEVATION

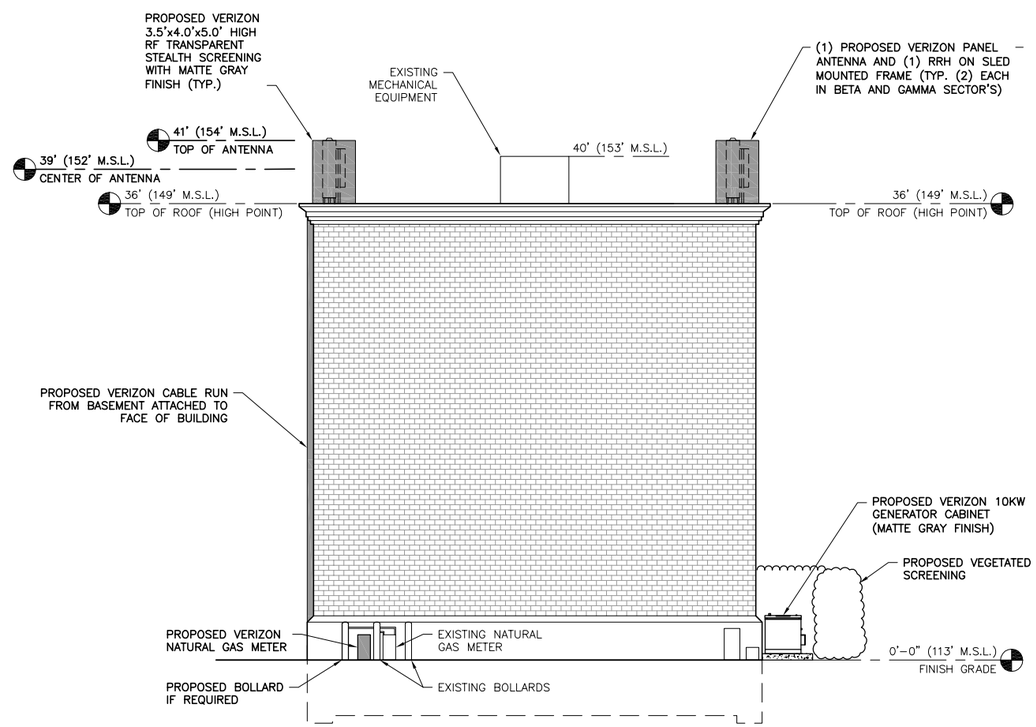

NORTH ELEVATION

GRAPHIC SCALE

5 0 2.5 5 10 20

(IN FEET)
1 inch = 5 ft. AT 24X36
HALF SIZE AT 11X17

DuBois & King inc.
ENGINEERING • PLANNING • MANAGEMENT • DEVELOPMENT
6 GREEN TREE DRIVE
SO. BURLINGTON, VT 05403
TEL: (802) 878-7661
FAX: (866) 783-7101
www.dubois-king.com
RANDOLPH, VT
SPRINGFIELD, VT
BEDFORD, NH
LACONIA, NH

© Copyright 2014 Dubois & King Inc.

PROFESSIONAL SEAL

NOT FOR CONSTRUCTION PRELIMINARY PLANS

NO.	DATE	DESCRIPTION	BY	CK'D
4	7-24-15	REVISED PER BURLINGTON COMMENTS	GJO	LJH
3	4-22-15	REVISED ANTENNA CONFIGURATION	JWP	LJH
2	6/25/14	ADDED NORTH AND EAST ELEVATIONS	TJD	LJH
1	3/17/14	REVISED ANTENNA CONFIGURATION	TJD	LJH

verizon wireless

PROJECT ID: 20130951131
PROJECT TYPE: BDGCA
LOCATION CODE: 275570

BURLINGTON WATERFRONT

86 LAKE STREET
BURLINGTON, VT
05401

SHEET TITLE

OPTION 2
BUILDING
ELEVATIONS

PERMIT PLANS

DRAWN BY	DATE
TJD	OCT. 2014
CHECKED BY	D&K PROJECT #
LJH	422339P
PROJ. ENG.	D&K ARCHIVE #
AWD	8161

SHEET NUMBER

C-4

SHEET 4 OF 5

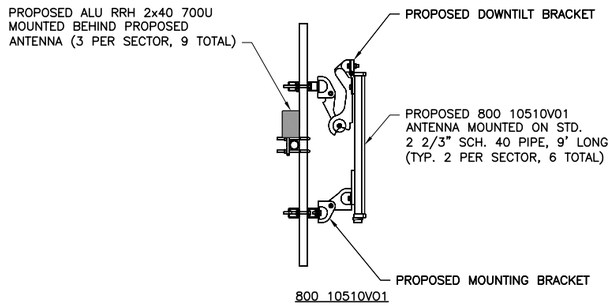

PROPOSED ANTENNA DETAILS
NO TO SCALE

ANTENNA FACIAL SURFACE AREA

800 10510V01:
54.7" X 6.1" = 2.32 SQ. FT. x 6 ANTENNAS = 13.90 SQ. FT

TOTAL AREA: = 13.90 SQ. FT

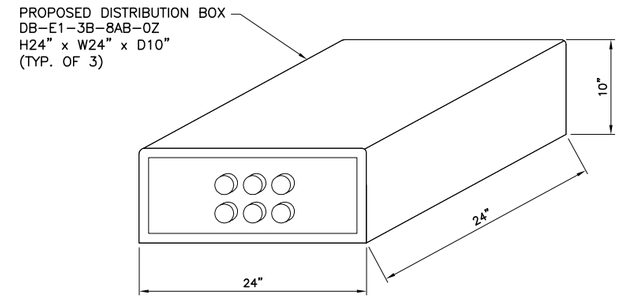

DISTRIBUTION BOX DETAIL
NOT TO SCALE

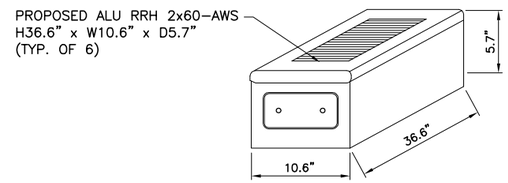

RRH DETAILS
NOT TO SCALE

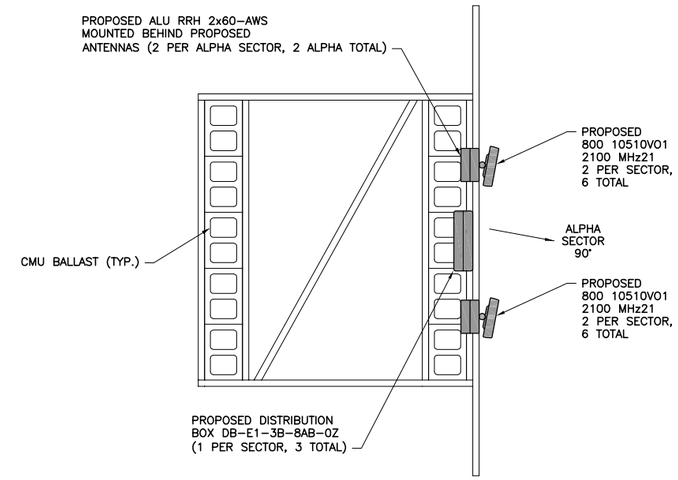

ALPHA SECTOR ANTENNA PLAN
NOT TO SCALE

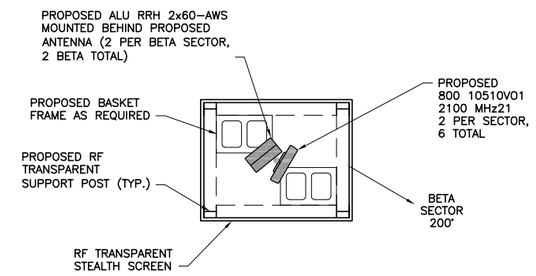

BETA SECTOR ANTENNA PLAN
NOT TO SCALE

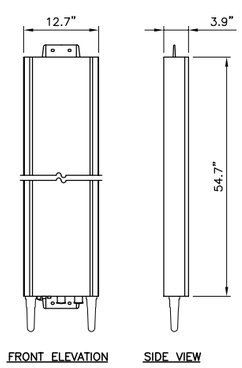

PANEL ANTENNA DETAILS
NOT TO SCALE

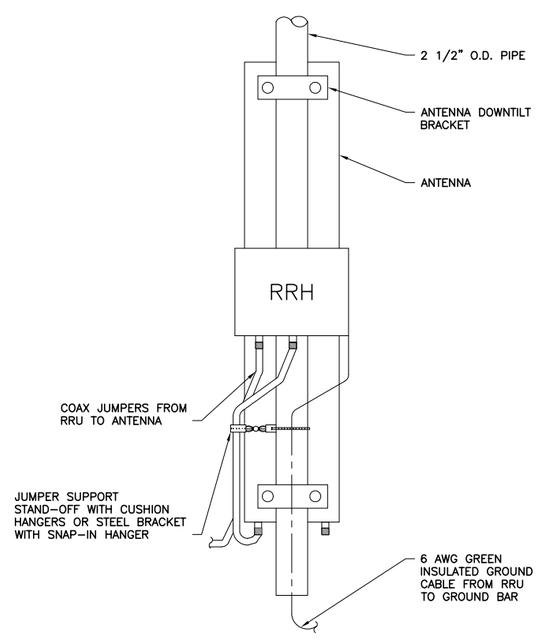

RRH PANEL DETAIL
NOT TO SCALE

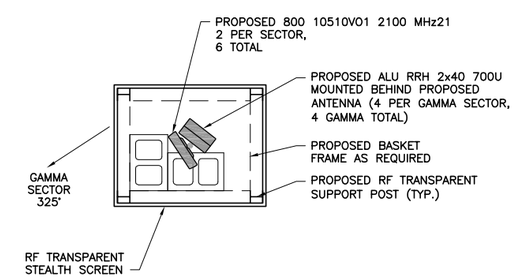

GAMMA SECTOR ANTENNA PLAN
NOT TO SCALE

DuBois & King inc.
ENGINEERING • PLANNING •
MANAGEMENT • DEVELOPMENT
6 GREEN TREE DRIVE
SO. BURLINGTON, VT 05403
TEL: (802) 878-7661
FAX: (866) 783-7101
www.dubois-king.com
RANDOLPH, VT
SPRINGFIELD, VT
BEDFORD, NH
LACONIA, NH
© Copyright 2014 Dubois & King Inc.

PROFESSIONAL SEAL

NOT FOR CONSTRUCTION PRELIMINARY PLANS

NO.	DATE	DESCRIPTION	BY	CK'D
4	7-24-15	REVISED PER BURLINGTON COMMENTS	GJO	LJH
3	4-22-15	REVISED ANTENNA CONFIGURATION	JWP	LJH
2	6/25/14	ADDED NORTH AND EAST ELEVATIONS	TJD	LJH
1	3/17/14	REVISED ANTENNA CONFIGURATION	TJD	LJH

verizon wireless

PROJECT ID: 20130951131
PROJECT TYPE: BDGCA
LOCATION CODE: 275570

BURLINGTON WATERFRONT

86 LAKE STREET
BURLINGTON, VT
05401

SHEET TITLE

OPTION 2
ANTENNA PLAN
AND DETAILS

PERMIT PLANS

DRAWN BY	DATE
TJD	OCT. 2014
CHECKED BY	D&K PROJECT #
LJH	422339P
PROJ. ENG.	D&K ARCHIVE #
AWD	8162

SHEET NUMBER

C-5