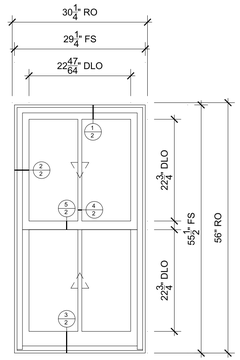

01
SCALE: 3/4" = 1'-0"

SPECIFICATIONS

Line #: 1
Qty: 4
Mark Unit: None
Product Line: Ultimate
Unit Description: Double Hung G2
Rough Opening: 30 1/4" X 56"
Frame Size: 29 1/4" X 55 1/2"
Exterior Finish: Pebble Gray
Species: Pine
Interior Finish: Bare
Unit Type: Double Hung G2
Call Number: CN2424
Glass Information: IG, Low E2 w/Argon, Stainless
Divider Type: 7/8" Rectangular SDL W/ Spacer - Stainless
Hardware Type: Sash Lock, Lift Type : None, No Finger Pull, Top Sash Limiter : None, Bottom Sash Limiter : None
Screen Type: Aluminum Screen
Hardware Color: Matte Black
Screen Surround Color: Pebble Gray
Screen Mesh Type: Charcoal Fiberglass Mesh
Jamb Depth: 4 9/16"

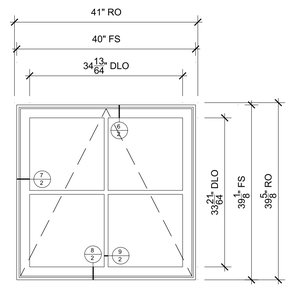

02
SCALE: 3/4" = 1'-0"

SPECIFICATIONS

Line #: 2
Qty: 2
Mark Unit: None
Product Line: Ultimate
Unit Description: Awning
Rough Opening: 41" X 39 5/8"
Frame Size: 40" X 39 1/8"
Exterior Finish: Pebble Gray
Species: Pine
Interior Finish: Bare
Unit Type: Awning, Roto Operating
Call Number: CN4040
Glass Information: IG - 3/4", Low E2 w/Argon, Stainless
Divider Type: 7/8" Rectangular SDL W/ Spacer - Stainless
Hardware Type: Folding Handle, No Sash Travel Limiter
Screen Type: Aluminum Screen
Hardware Color: Matte Black
Screen Surround Color: Ebony
Screen Mesh Type: Charcoal Fiberglass Mesh
Jamb Depth: 4 9/16"

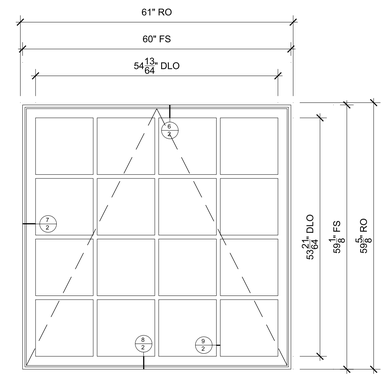

03
SCALE: 3/4" = 1'-0"

SPECIFICATIONS

Line #: 3
Qty: 1
Mark Unit: None
Product Line: Ultimate
Unit Description: Awning
Rough Opening: 61" X 59 5/8"
Frame Size: 60" X 59 1/8"
Exterior Finish: Pebble Gray
Species: Pine
Interior Finish: Bare
Unit Type: Awning, Roto Operating
Call Number: CN6060
Glass Information: IG - 3/4", Low E2 w/Argon, Stainless
Divider Type: 7/8" Rectangular SDL W/ Spacer - Stainless
Hardware Type: Folding Handle, No Sash Travel Limiter
Screen Type: Aluminum Screen
Hardware Color: Matte Black
Screen Surround Color: Ebony
Screen Mesh Type: Charcoal Fiberglass Mesh
Jamb Depth: 4 9/16"

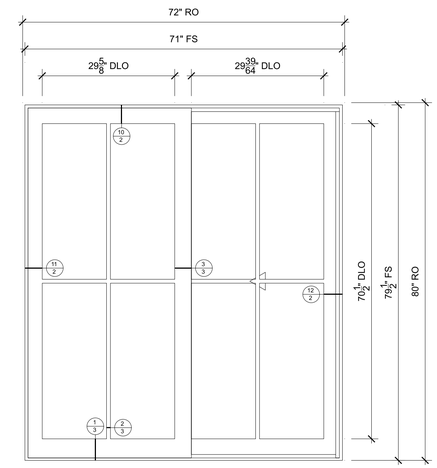

04
SCALE: 3/4" = 1'-0"

SPECIFICATIONS

Line #: 4
Qty: 1
Mark Unit: None
Product Line: Ultimate
Unit Description: Sliding Patio Door
Rough Opening: 72" X 80"
Frame Size: 71" X 79 1/2"
Exterior Finish: Pebble Gray
Species: Pine
Interior Finish: Bare
Unit Type: Sliding Patio Door, OX
Call Number: CN
Glass Information: Tempered Low E2 w/Argon, Stainless
Divider Type: 7/8" Rectangular SDL W/ Spacer - Stainless
Hardware Type: 2 Point Multi-Point Lock
Screen Type: Ultimate Sliding Screen w/ Roller Assembly
Hardware Color: Matte Black
Screen Surround Color: Pebble Gray
Screen Mesh Type: Charcoal Fiberglass Mesh
Jamb Depth: 4 9/16"

MARVIN®

ORDERING PRODUCTS WITH REFERENCE TO SHOP DRAWINGS: Before ordering the Marvin Window and Door products illustrated within these shop drawings, a copy of these drawings accompanied by an approved signature of the purchaser must be returned to the Architectural Division at Marvin Windows & Doors, P.O. Box 100, Warroad, Minnesota 56763. If the Marvin products included herein are ordered without reference to the approved shop drawings, Marvin Windows and Doors assumes no responsibility in guaranteeing product coordination with the drawings.

REVISION:

CREATED: 07/17/2020

PROJ/JOB: Dan Cockerline / Carrige House 115 N. Union

DIST/DEALER: WINDOWS & DOORS BY BROWNELL-GO

DRAWN: BILL BALDWIN

PK VERSION: 0003.03.00

QUOTE#: Z6S6ANH

SHEET
1
OF 3

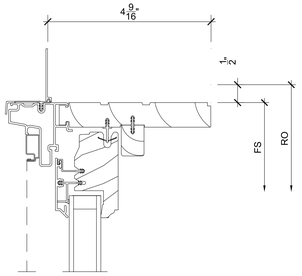

1/2 Head

SCALE: 6" = 1'-0"

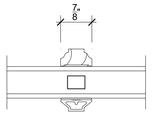

4/2 Divided Lite

SCALE: 6" = 1'-0"

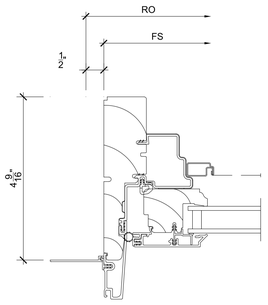

7/2 Jamb

SCALE: 6" = 1'-0"

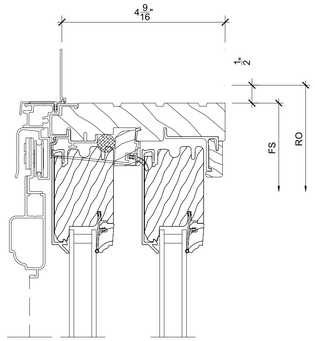

10/2 Head

SCALE: 6" = 1'-0"

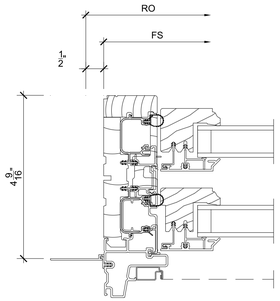

2/2 Jamb

SCALE: 6" = 1'-0"

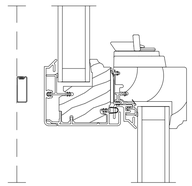

5/2 Checkrail

SCALE: 6" = 1'-0"

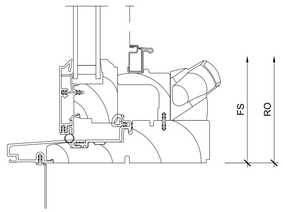

8/2 Sill

SCALE: 6" = 1'-0"

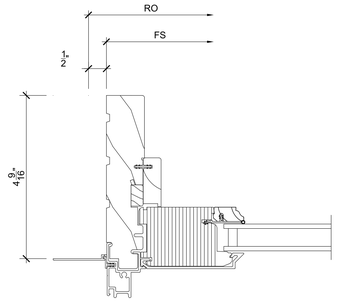

11/2 Jamb

SCALE: 6" = 1'-0"

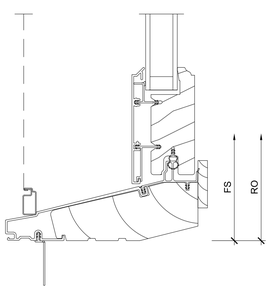

3/2 Sill

SCALE: 6" = 1'-0"

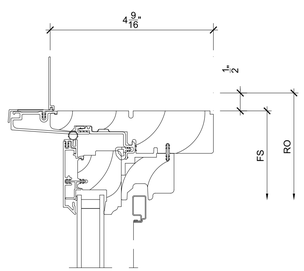

6/2 Head

SCALE: 6" = 1'-0"

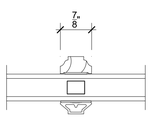

9/2 Divided Lite

SCALE: 6" = 1'-0"

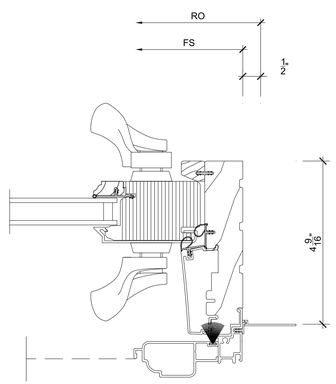

12/2 Jamb

SCALE: 6" = 1'-0"

MARVIN®

ORDERING PRODUCTS WITH REFERENCE TO SHOP DRAWINGS: Before ordering the Marvin Window and Door products illustrated within these shop drawings, a copy of these drawings accompanied by an approved signature of the purchaser must be returned to the Architectural Division at Marvin Windows & Doors, P.O. Box 100, Warroad, Minnesota 56763. If the Marvin products included herein are ordered without reference to the approved shop drawings, Marvin Windows and Doors assumes no responsibility in guaranteeing product coordination with the drawings.

REVISION:

CREATED: 07/17/2020

PROJ/JOB: Dan Cockerline / Carrige House 115 N. Union

DIST/DEALER: WINDOWS & DOORS BY BROWNELL-GO

DRAWN: BILL BALDWIN

PK VERSION: 0003.03.00

QUOTE#: Z6S6ANH

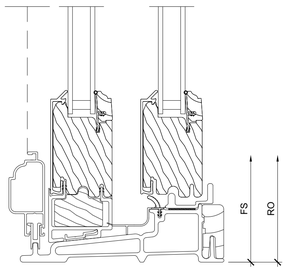

1/3 Sill

SCALE: 6" = 1'-0"

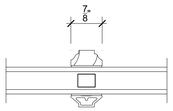

2/3 Divided Lite

SCALE: 6" = 1'-0"

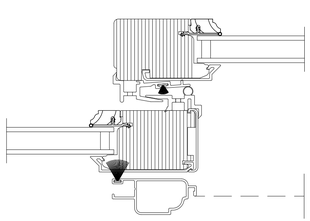

3/3 Meeting Stile

SCALE: 6" = 1'-0"

4/3 NOT USED

SCALE: 6" = 1'-0"

5/3 NOT USED

SCALE: 6" = 1'-0"

6/3 NOT USED

SCALE: 6" = 1'-0"

7/3 NOT USED

SCALE: 6" = 1'-0"

8/3 NOT USED

SCALE: 6" = 1'-0"

9/3 NOT USED

SCALE: 6" = 1'-0"

10/3 NOT USED

SCALE: 6" = 1'-0"

11/3 NOT USED

SCALE: 6" = 1'-0"

12/3 NOT USED

SCALE: 6" = 1'-0"

MARVIN®

ORDERING PRODUCTS WITH REFERENCE TO SHOP DRAWINGS: Before ordering the Marvin Window and Door products illustrated within these shop drawings, a copy of these drawings accompanied by an approved signature of the purchaser must be returned to the Architectural Division at Marvin Windows & Doors, P.O. Box 100, Warroad, Minnesota 56763. If the Marvin products included herein are ordered without reference to the approved shop drawings, Marvin Windows and Doors assumes no responsibility in guaranteeing product coordination with the drawings.

PROJ/JOB: Dan Cockerline / Carrige House 115 N. Union

DIST/DEALER: WINDOWS & DOORS BY BROWNELL-GO

DRAWN: BILL BALDWIN

QUOTE#: Z6S6ANH

PK VERSION: 0003.03.00

CREATED: 07/17/2020

REVISION:

SHEET

3

OF 3