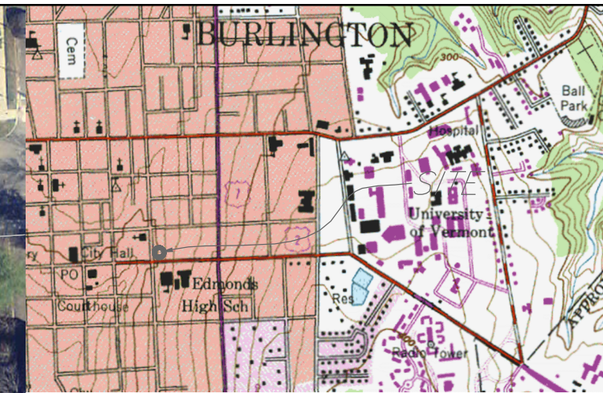


LOCATION MAP
NOT TO SCALE

NOTES:

1. PROPERTY OWNER: FAIRPOINT COMMUNICATIONS
117 MAIN STREET
WINTHROP, ME 04364

2. SITE 911 ADDRESS: 266 MAIN STREET
BURLINGTON, VT 05401

3. APPLICANT: NYNEX MOBILE LIMITED PARTNERSHIP 1 AND
CELLCO PARTNERSHIP
EACH D/B/A VERIZON WIRELESS
C/O BRIAN SULLIVAN, ESQ., MURPHY SULLIVAN KRONK
P.O. BOX 4485, 275 COLLEGE STREET
BURLINGTON, VT 05401

4. ENGINEER: DUBOIS & KING, INC.
6 GREEN TREE DRIVE
SOUTH BURLINGTON, VT 05403 802-878-7661

5. PARCEL ID #: 049-3-103-000

6. ADD PROPOSED USE: VERIZON WIRELESS: UNATTENDED TELECOMMUNICATIONS FACILITY. (1-2) VISITS PER MONTH BY TECHNICIAN. NO WATER OR SEWER SERVICES REQUIRED.

7. PROPERTY BOUNDARIES SHOWN ARE APPROXIMATE AS PROVIDED BY CITY OF BURLINGTON TAX MAPS. DUBOIS & KING, INC. DID NOT PERFORM A BOUNDARY SURVEY.

8. TOPOGRAPHIC SURVEY PERFORMED BY DUBOIS & KING, INC. ON DECEMBER 4, 2015.

9. ELEVATIONS FROM GPS OBSERVATION

LEGEND

| | |
|---|---|
| — — — | APPROXIMATE PROPERTY LINE |
| | EXISTING 20' CONTOUR LINE |
| —OHET— | EXISTING OVERHEAD ELECTRICAL & TELEPHONE LINE |
| —T— | PROPOSED TELEPHONE SERVICE LINE |
| —E— | PROPOSED ELECTRICAL SERVICE LINE |
| —GAS— | PROPOSED NATURAL GAS SERVICE LINE |
| —F— | PROPOSED FIBER COMMUNICATIONS LINE |
| | EXISTING OVERHEAD UTILITY POLE |
| | SURVEY CONTROL POINT |

| | |
|---|---|
| POSTED SPEED LIMIT: | 25 MPH |
| AREA OF CLEARING: | 0 S.F. |
| AREA OF DISTURBANCE: | 0 S.F. |
| AREA OF EXISTING IMPERVIOUS: | 0 S.F. |
| AREA OF PROPOSED IMPERVIOUS: | 0 S.F. |

GRAPHIC SCALE
40 0 20 40 80 160
( IN FEET )
1 inch = 40 ft. AT 22X34
HALF SIZE AT 11X17

DuBois & King inc.
ENGINEERING • PLANNING • MANAGEMENT • DEVELOPMENT
6 GREEN TREE DRIVE
SO. BURLINGTON, VT 05403
TEL: (802) 878-7661
FAX: (866) 783-7101
www.dubois-king.com
RANDOLPH, VT
SPRINGFIELD, VT
BEDFORD, NH
LACONIA, NH
© Copyright 2014 Dubois & King Inc.

PROFESSIONAL SEAL
NOT FOR CONSTRUCTION
PRELIMINARY PLANS

| NO. | DATE | DESCRIPTION | BY | CK'D |
|---|---|---|---|---|
| 2 | 1-08-16 | REVISED PROJECT NAME | JWP | LJH |
| 1 | 12-22-15 | ISSUED FOR PERMITTING | JWP | LJH |

verizon wireless

PROJECT ID: 20141182860
PROJECT TYPE: GRAN
LOCATION CODE: 320728

BURL VT
CRAN HUB

266 MAIN STREET
BURLINGTON, VT
05401

SHEET TITLE
OVERALL
SITE PLAN

PERMIT PLANS

| | |
|---|---|
| DRAWN BY JWP | DATE SEPT. 2015 |
| CHECKED BY LJH | D&K PROJECT # 422556P |
| PROJ. ENG. LJH | D&K ARCHIVE # |

SHEET NUMBER
C-1

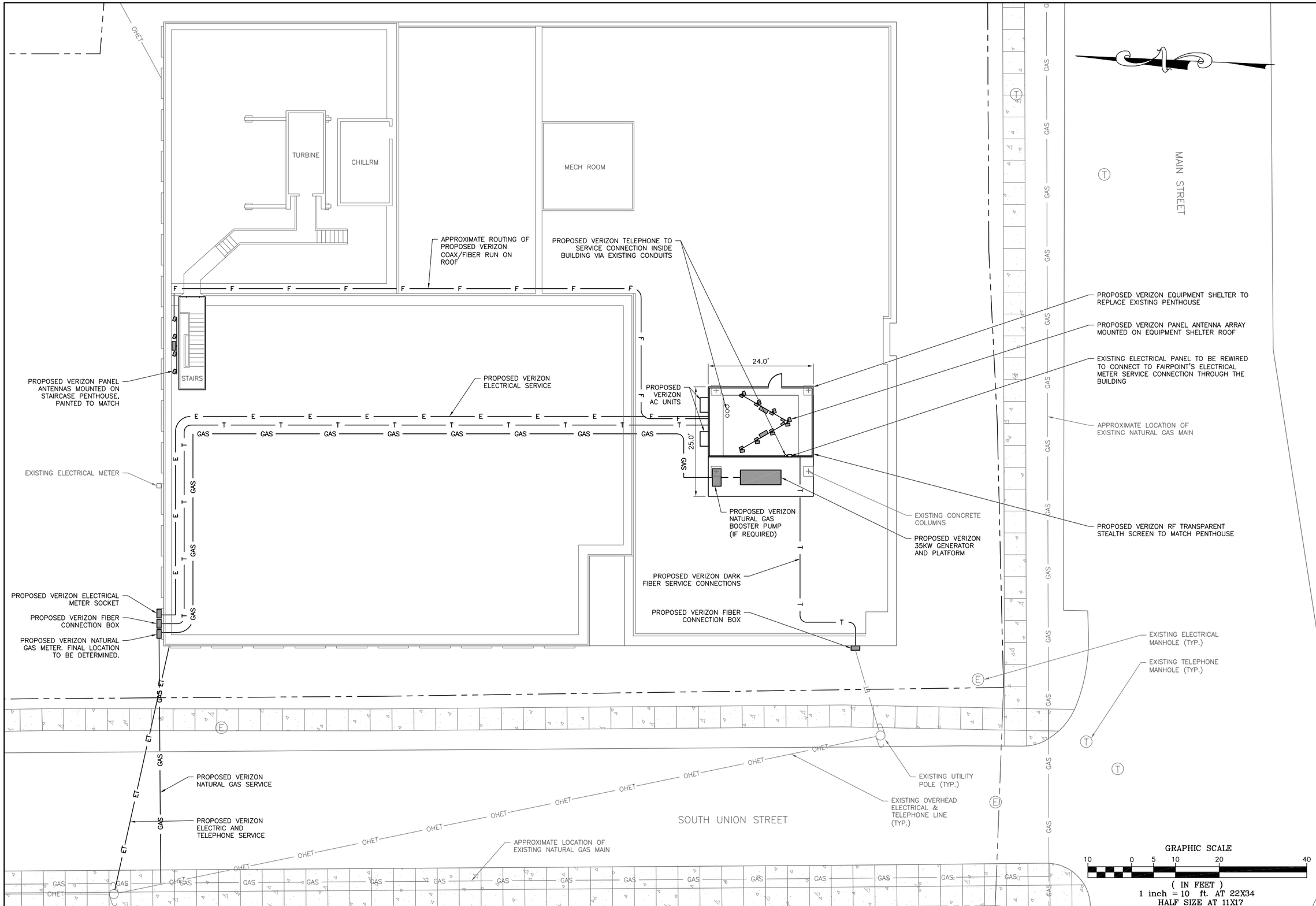



DuBois & King inc.
ENGINEERING • PLANNING • MANAGEMENT • DEVELOPMENT
6 GREEN TREE DRIVE
SO. BURLINGTON, VT 05403
TEL: (802) 878-7661
FAX: (866) 783-7101
www.dubois-king.com
RANDOLPH, VT
SPRINGFIELD, VT
BEDFORD, NH
LACONIA, NH

© Copyright 2014 Dubois & King Inc.

PROFESSIONAL SEAL

**NOT FOR CONSTRUCTION PRELIMINARY PLANS**

| NO. | DATE | DESCRIPTION | BY | CK'D |
|---|---|---|---|---|
| 2 | 1-08-16 | REVISED PROJECT NAME | JWP | LJH |
| 1 | 12-22-15 | ISSUED FOR PERMITTING | JWP | LJH |

verizon wireless

PROJECT ID: 20141182960
PROJECT TYPE: CRAN
LOCATION CODE: 320728

**BURL VT CRAN HUB**

266 MAIN STREET
BURLINGTON, VT
05401

SHEET TITLE

ROOF PLAN

PERMIT PLANS

| DRAWN BY | DATE |
|---|---|
| JWP | SEPT. 2015 |
| CHECKED BY | D&K PROJECT # |
| LJH | 422556P |
| PROJ. ENG. | D&K ARCHIVE # |
| LJH | |

SHEET NUMBER

C-2

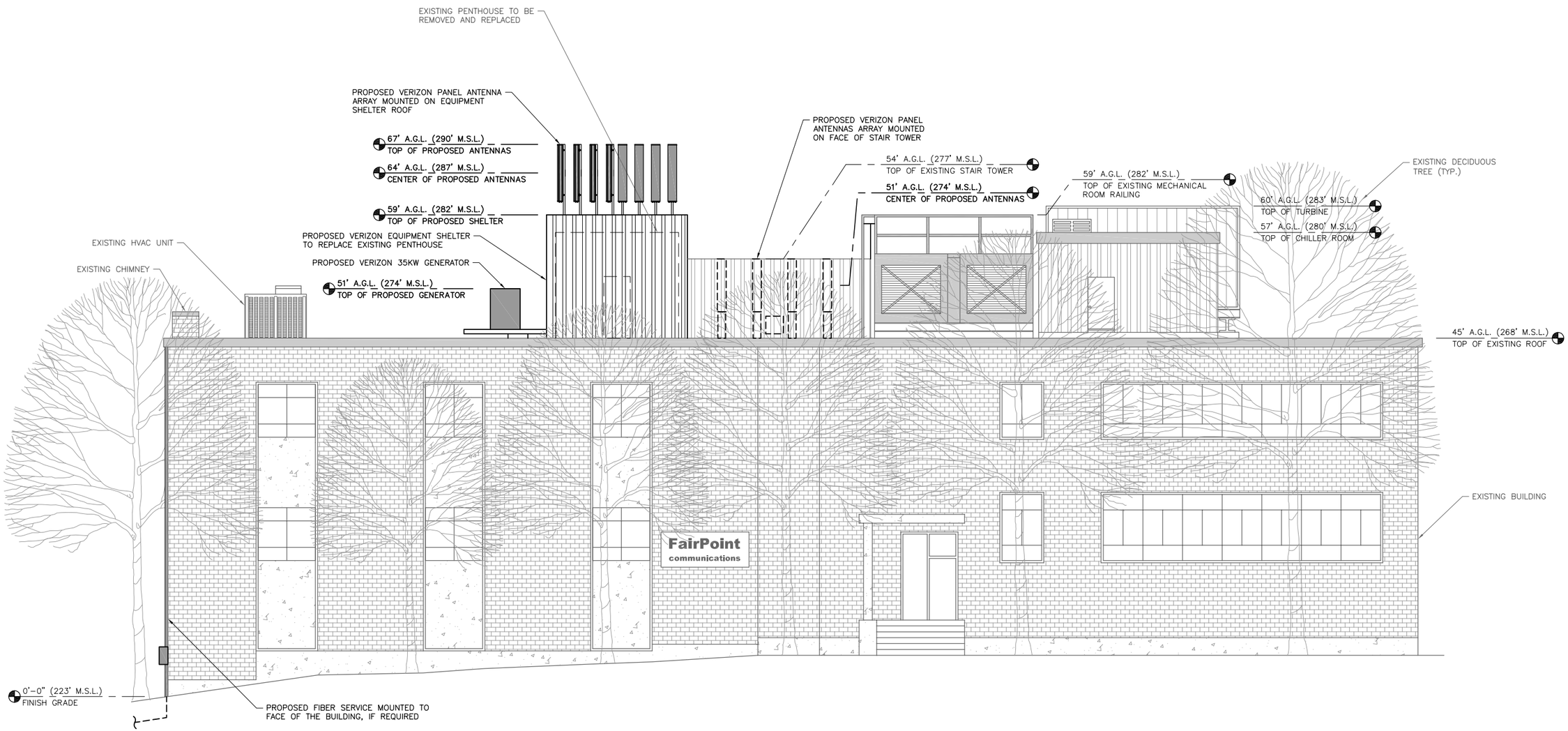


SOUTH BUILDING ELEVATION

GRAPHIC SCALE

6 0 3 6 12 24

( IN FEET )
1 inch = 6 ft. AT 22X34
HALF SIZE AT 11X17


DuBois & King inc.
ENGINEERING • PLANNING • MANAGEMENT • DEVELOPMENT
6 GREEN TREE DRIVE
SO. BURLINGTON, VT 05403
TEL: (802) 878-7661
FAX: (866) 783-7101
www.dubois-king.com
RANDOLPH, VT
SPRINGFIELD, VT
BEDFORD, NH
LACONIA, NH

© Copyright 2014 Dubois & King Inc.

PROFESSIONAL SEAL

**NOT FOR CONSTRUCTION PRELIMINARY PLANS**

| NO. | DATE | DESCRIPTION | BY | CK'D |
|---|---|---|---|---|
| 3 | 3-03-16 | REVISED ANTENNA CONFIG OPTIONS | JWP | LJH |
| 2 | 1-08-16 | REVISED PROJECT NAME | JWP | LJH |
| 1 | 12-22-15 | ISSUED FOR PERMITTING | JWP | LJH |

verizon wireless

PROJECT ID: 20141182960
PROJECT TYPE: CRAN
LOCATION CODE: 320728

**BURL VT CRAN HUB**

266 MAIN STREET
BURLINGTON, VT
05401

SHEET TITLE

SOUTH BUILDING ELEVATION OPTION A

PERMIT PLANS

| DRAWN BY | DATE |
|---|---|
| JWP | SEPT. 2015 |
| CHECKED BY | D&K PROJECT # |
| LJH | 422556P |
| PROJ. ENG. | D&K ARCHIVE # |
| LJH | |

SHEET NUMBER

C-3A

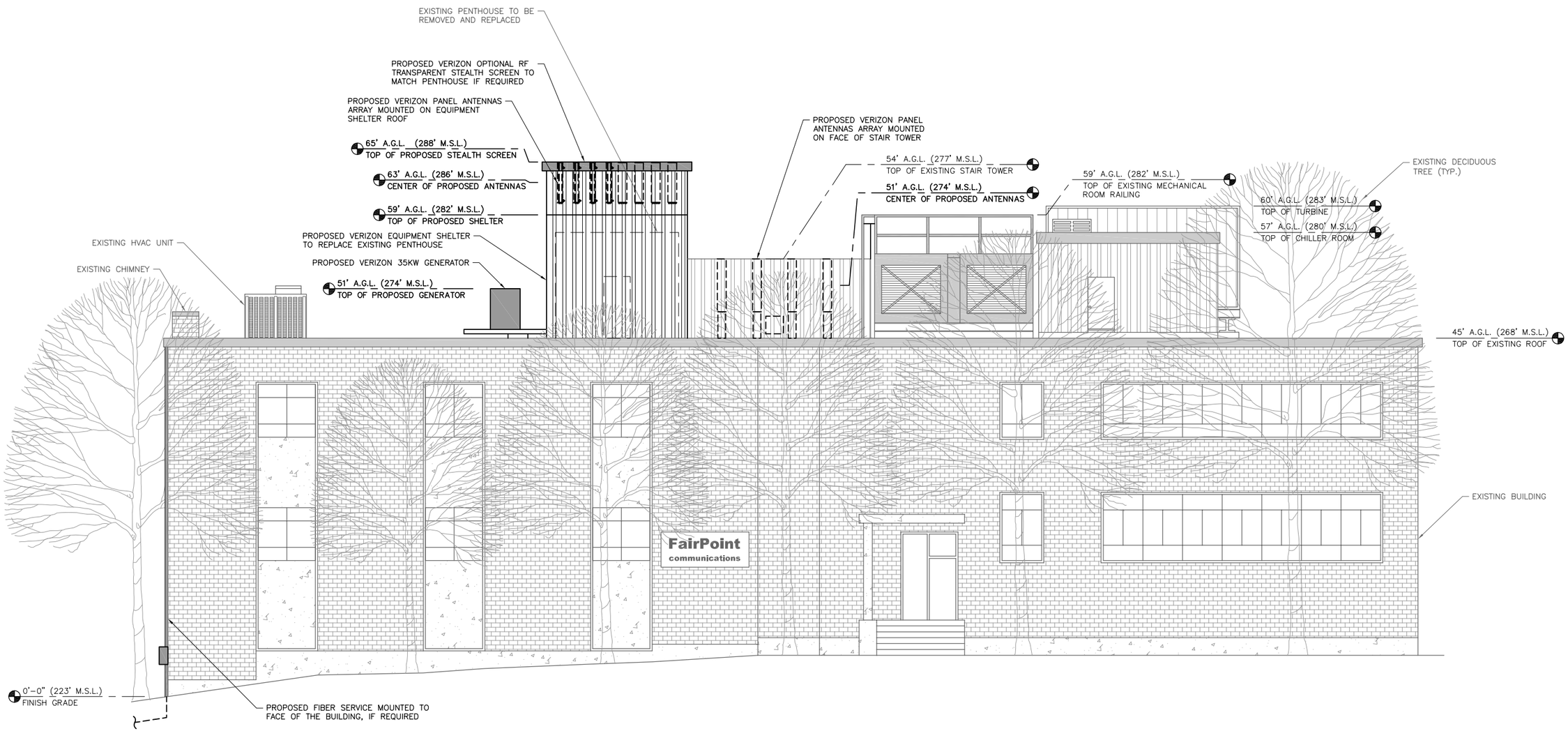


SOUTH BUILDING ELEVATION

GRAPHIC SCALE

6 0 3 6 12 24

( IN FEET )
1 inch = 6 ft. AT 22X34
HALF SIZE AT 11X17


DuBois & King inc.
ENGINEERING • PLANNING • MANAGEMENT • DEVELOPMENT
6 GREEN TREE DRIVE
SO. BURLINGTON, VT 05403
TEL: (802) 878-7661
FAX: (866) 783-7101
www.dubois-king.com
RANDOLPH, VT
SPRINGFIELD, VT
BEDFORD, NH
LACONIA, NH

© Copyright 2014 Dubois & King Inc.

PROFESSIONAL SEAL

**NOT FOR CONSTRUCTION PRELIMINARY PLANS**

| NO. | DATE | DESCRIPTION | BY | CK'D |
|---|---|---|---|---|
| 3 | 3-03-16 | REVISED ANTENNA CONFIG OPTIONS | JWP | LJH |
| 2 | 1-08-16 | REVISED PROJECT NAME | JWP | LJH |
| 1 | 12-22-15 | ISSUED FOR PERMITTING | JWP | LJH |

verizon wireless

PROJECT ID: 20141182960
PROJECT TYPE: CRAN
LOCATION CODE: 320728

**BURL VT CRAN HUB**

266 MAIN STREET
BURLINGTON, VT
05401

SHEET TITLE

SOUTH BUILDING ELEVATION OPTION B

PERMIT PLANS

| DRAWN BY | DATE |
|---|---|
| JWP | SEPT. 2015 |
| CHECKED BY | D&K PROJECT # |
| LJH | 422556P |
| PROJ. ENG. | D&K ARCHIVE # |
| LJH | |

SHEET NUMBER

C-3B

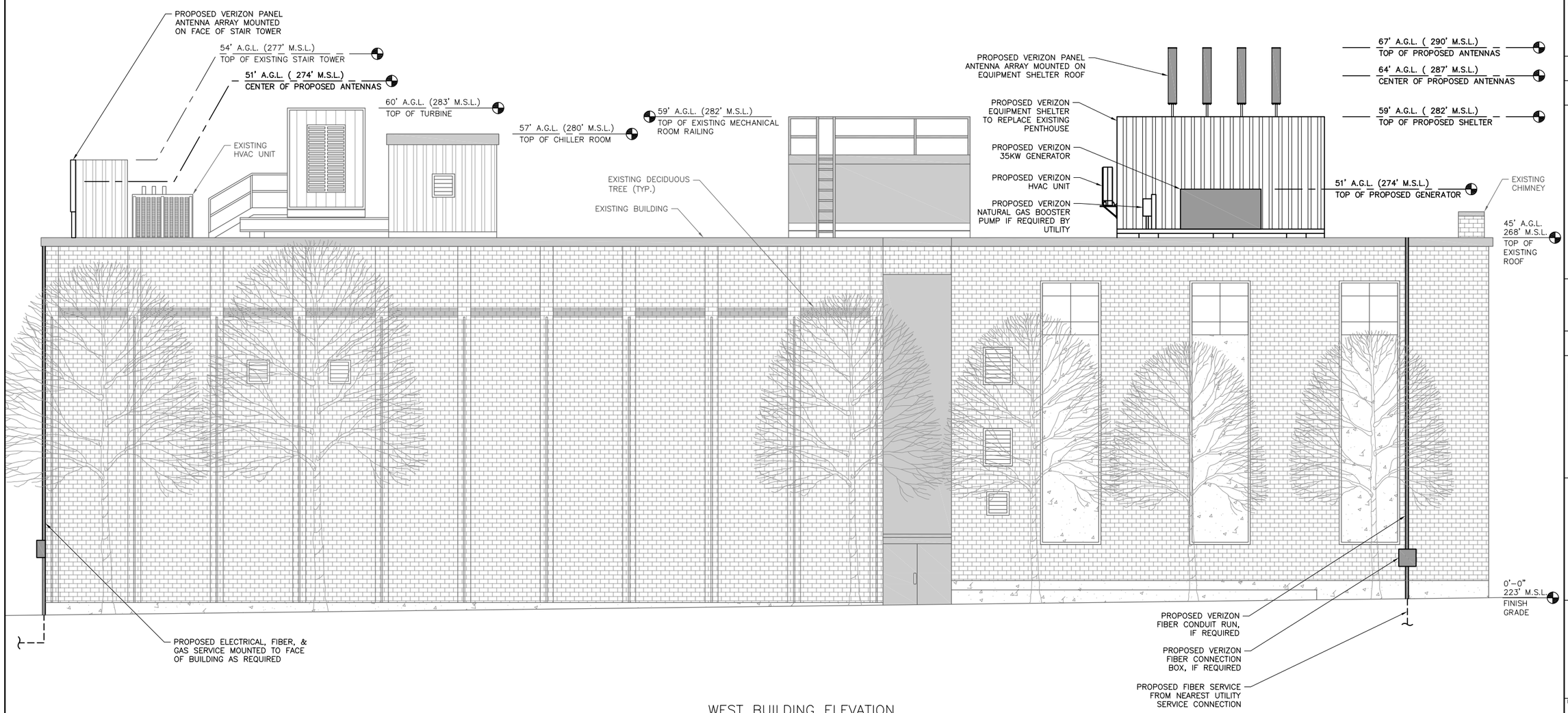


WEST BUILDING ELEVATION

GRAPHIC SCALE

6 0 3 6 12 24

( IN FEET )
1 inch = 6 ft. AT 22X34
HALF SIZE AT 11X17


DuBois & King inc.
ENGINEERING • PLANNING • MANAGEMENT • DEVELOPMENT
6 GREEN TREE DRIVE
SO. BURLINGTON, VT 05403
TEL: (802) 878-7661
FAX: (866) 783-7101
www.dubois-king.com
RANDOLPH, VT
SPRINGFIELD, VT
BEDFORD, NH
LACONIA, NH

© Copyright 2014 Dubois & King Inc.

PROFESSIONAL SEAL

**NOT FOR CONSTRUCTION PRELIMINARY PLANS**

| NO. | DATE | DESCRIPTION | BY | CK'D |
|---|---|---|---|---|
| 3 | 3-04-16 | REVISED ANTENNA CONFIG OPTIONS | JWP | LJH |
| 2 | 1-08-16 | REVISED PROJECT NAME | JWP | LJH |
| 1 | 12-22-15 | ISSUED FOR PERMITTING | JWP | LJH |

verizon wireless

PROJECT ID: 20141182960
PROJECT TYPE: CRAN
LOCATION CODE: 320728

**BURL VT CRAN HUB**

266 MAIN STREET
BURLINGTON, VT
05401

SHEET TITLE

WEST BUILDING ELEVATION OPTION A

PERMIT PLANS

| DRAWN BY | DATE |
|---|---|
| JWP | SEPT. 2015 |
| CHECKED BY | D&K PROJECT # |
| LJH | 422556P |
| PROJ. ENG. | D&K ARCHIVE # |
| LJH | |

SHEET NUMBER

C-4A

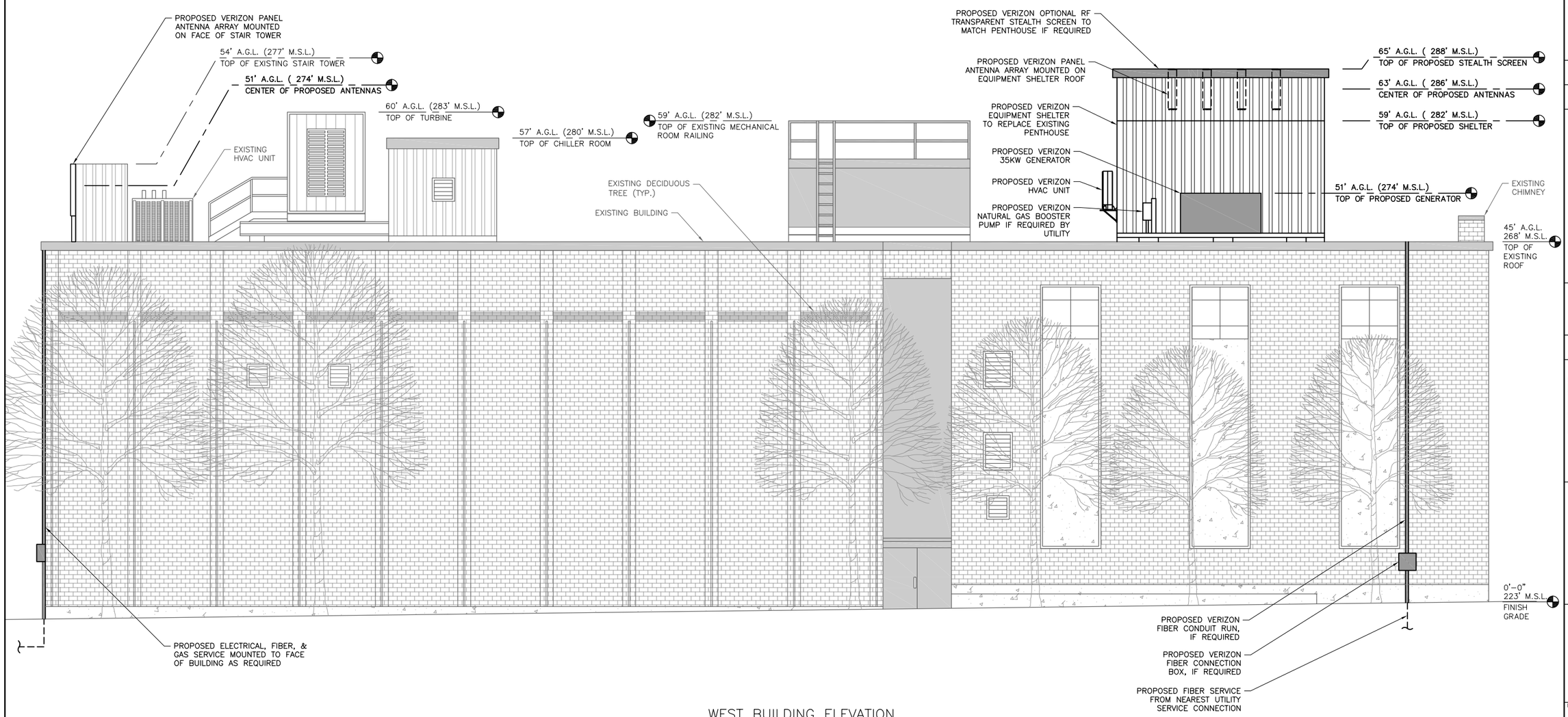


WEST BUILDING ELEVATION

GRAPHIC SCALE

6 0 3 6 12 24

( IN FEET )
1 inch = 6 ft. AT 22X34
HALF SIZE AT 11X17


DuBois & King inc.
ENGINEERING • PLANNING • MANAGEMENT • DEVELOPMENT
6 GREEN TREE DRIVE
SO. BURLINGTON, VT 05403
TEL: (802) 878-7661
FAX: (866) 783-7101
www.dubois-king.com
RANDOLPH, VT
SPRINGFIELD, VT
BEDFORD, NH
LACONIA, NH

© Copyright 2014 Dubois & King Inc.

PROFESSIONAL SEAL

**NOT FOR CONSTRUCTION PRELIMINARY PLANS**

| NO. | DATE | DESCRIPTION | BY | CK'D |
|---|---|---|---|---|
| 3 | 3-04-16 | REVISED ANTENNA CONFIG OPTIONS | JWP | LJH |
| 2 | 1-08-16 | REVISED PROJECT NAME | JWP | LJH |
| 1 | 12-22-15 | ISSUED FOR PERMITTING | JWP | LJH |

verizon wireless

PROJECT ID: 20141182960
PROJECT TYPE: CRAN
LOCATION CODE: 320728

**BURL VT CRAN HUB**

266 MAIN STREET
BURLINGTON, VT
05401

SHEET TITLE

WEST BUILDING ELEVATION OPTION B

PERMIT PLANS

| DRAWN BY | DATE |
|---|---|
| JWP | SEPT. 2015 |
| CHECKED BY | D&K PROJECT # |
| LJH | 422556P |
| PROJ. ENG. | D&K ARCHIVE # |
| LJH | |

SHEET NUMBER

C-4B

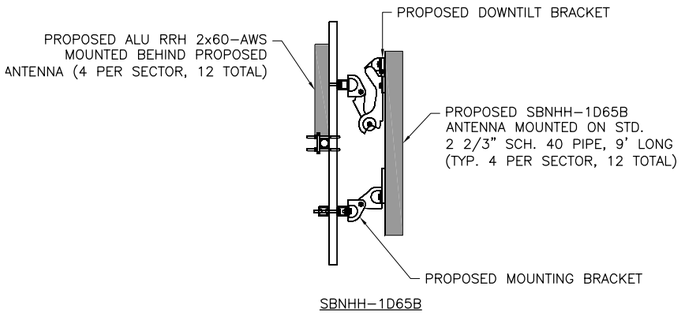


PROPOSED ANTENNA DETAILS
NO TO SCALE

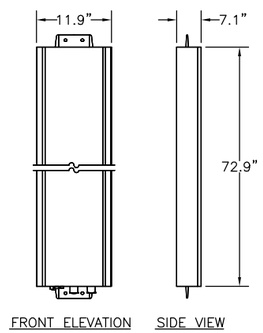


PANEL ANTENNA DETAILS
NOT TO SCALE

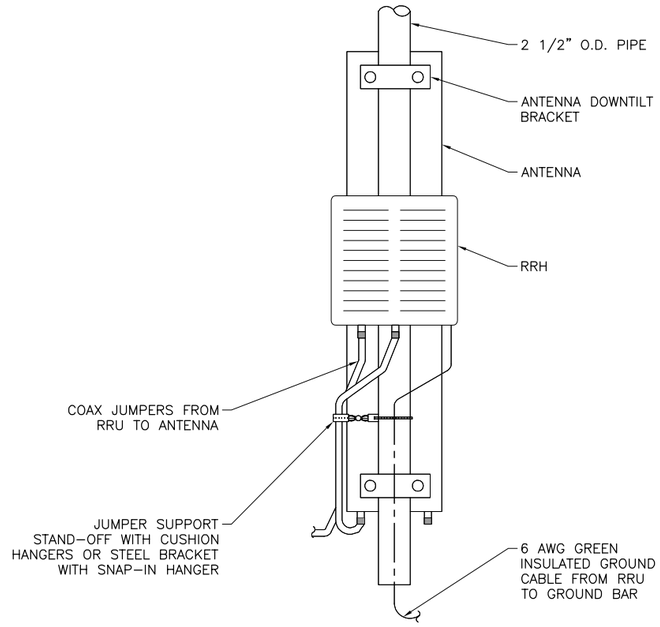


RRH PANEL DETAIL
NOT TO SCALE

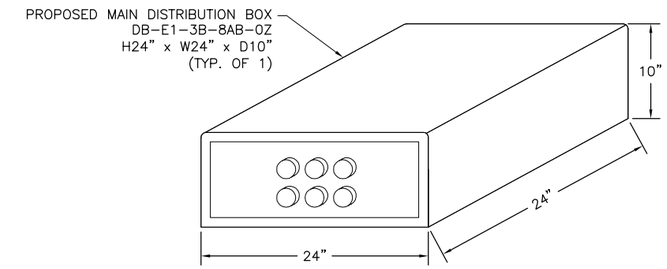


MAIN DISTRIBUTION BOX DETAIL
NOT TO SCALE

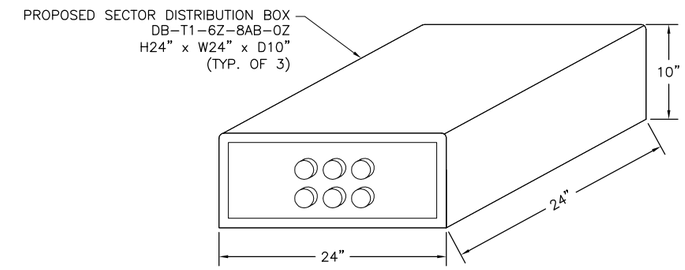


SECTOR DISTRIBUTION BOX DETAIL
NOT TO SCALE

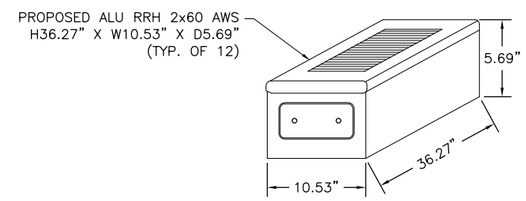


RRH 2X60 700 U DETAIL
NOT TO SCALE

## ANTENNA FACIAL SURFACE AREA

SBNHH-1D65B:
72.9" X 11.9" = 6.01 SQ. FT. X 12 ANTENNAS = 72.12 SQ. FT.

ALU RRH 2X60 AWS (BEHIND SBNHH-1D65B):
36.27" X 10.53" = 2.65 SQ. FT. X 8 RRH UNITS

ALU RRH 2X60 AWS (ON FACE OF STAIR TOWER):
36.27" X 10.53" = 2.65 SQ. FT. X 4 RRH UNITS = 10.60 SQ. FT.

DB-T1-6Z-8AB-0Z (SECTOR DISTRIBUTION BOXES):
24" X 24" = 4 SQ. FT. X 3 SDB = 12 SQ. FT.

DB-E1-3B-8AB-0Z (MAIN DISTRIBUTION BOX):
24" X 24" = 4 SQ. FT. X 1 MDB = 4 SQ. FT.

TOTAL SURFACE AREA: (72.12 + 10.60 + 12 + 4) = 98.72 SQ. FT

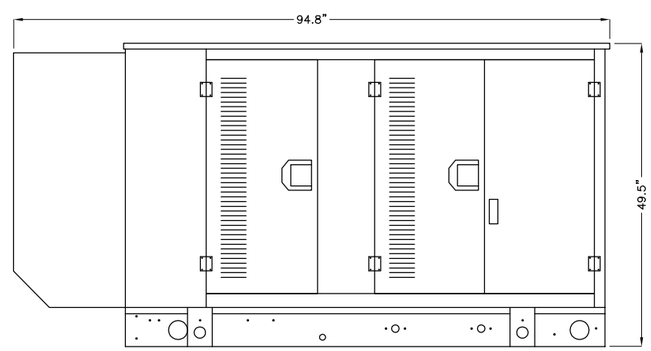


35KW STANDARD ENCLOSURE GENERATOR DETAIL
NOT TO SCALE

DuBois & King inc.
ENGINEERING • PLANNING • MANAGEMENT • DEVELOPMENT
6 GREEN TREE DRIVE
SO. BURLINGTON, VT 05403
TEL: (802) 878-7661
FAX: (866) 783-7101
www.dubois-king.com
RANDOLPH, VT
SPRINGFIELD, VT
BEDFORD, NH
LACONIA, NH
© Copyright 2014 Dubois & King Inc.

PROFESSIONAL SEAL

**NOT FOR CONSTRUCTION PRELIMINARY PLANS**

| NO. | DATE | DESCRIPTION | BY | CK'D |
|---|---|---|---|---|
| 2 | 1-08-16 | REVISED PROJECT NAME | JWP | LJH |
| 1 | 12-22-15 | ISSUED FOR PERMITTING | JWP | LJH |

verizon wireless

PROJECT ID: 20141182960
PROJECT TYPE: CRAN
LOCATION CODE: 320728

**BURL VT CRAN HUB**

266 MAIN STREET
BURLINGTON, VT
05401

SHEET TITLE

ANTENNA DETAILS

PERMIT PLANS

| DRAWN BY | DATE |
|---|---|
| JWP | SEPT. 2015 |
| CHECKED BY | D&K PROJECT # |
| LJH | 422556P |
| PROJ. ENG. | D&K ARCHIVE # |
| LJH | |

SHEET NUMBER

C-5