June 4, 2014

Ref: 57634.00

Scott Gustin, AICP, CFM
Senior Planner
Department of Planning and Zoning
City Hall, 149 Church Street
Burlington, VT 05401

Re: Zoning Permit Application – Burlington Bike Path Rehabilitation
First Phase of Construction (Perkins Pier to North Beach)

Dear Scott:

On behalf of the City of Burlington ("City") Department of Parks and Recreation ("Applicant, "DPR"), Vanasse Hangen Brustlin, Inc. ("VHB") has prepared the enclosed application for a Zoning Permit for the first phase of construction for the Burlington Bike Path Rehabilitation Project ("Project"). This first phase will address a variety of deficiencies in the Bike Path within its most heavily used segment: the downtown area between Maple Street and College Street and in Waterfront Park. Furthermore, Path realignment is proposed through the Urban Reserve to Texaco Beach, and Path widening to continue north to a point just south of the entrance to North Beach Park.

This application includes the following materials, which have also been provided electronically on the enclosed flash drive:

- signed Basic Zoning Permit Application Form;
- signed Erosion Prevention and Sediment Control Plan Form;
- representative photographs of existing conditions within the Project area;
- Preliminary Design Plans for the Project, printed at full-scale and reduced to 11X17;
- Zoning District Summary and Site Location Map; and
- tabular Summary of Lot Coverage.

As this is a City project, the application fees are waived.

Vanasse Hangen Brustlin, Inc.
7056 US Route 7, Post Office Box 120
North Ferrisburgh, Vermont 05473
802.497.6100 ▪ FAX 802.425.7799
www.vhb.com

Proposed Project Phasing

The overall Project encompasses the entire length of the Bike Path; roughly 7.9 miles from Austin Drive to the Winooski River Bridge. The first phase of construction, for which the Applicant is seeking approval, includes approximately 1.70 miles commencing just south of the Maple Street near Perkins Pier and running north to a location approximately 150 feet south of the entrance to North Beach Park (see Zoning District Summary and Site Location Map).

Status of Design and Plan Updates

As you are aware, the Project is moving forward at an accelerated schedule in order to provide the citizens of Burlington with much needed enhancements to one of the City's most prized recreational resources. The Mayor has made a commitment to commencing the Bike Path rehabilitation this year. It is for this reason that we have initiated the process of Project Review through this application, though some updates to the Design Plan are anticipated based on forthcoming information. In particular, soil testing in the Urban Reserve will be used to determine the degree to which removal of impervious surfaces, remnants of the area's industrial period, can be carried out in order to comply with the lot coverage restrictions for this Zoning District and to generally minimize unnecessary impervious surfaces.

The Applicant understands that any updates to the Design Plan are to be submitted to the Department of Planning and Zoning by June 23rd, 2014.

<u>Components Not Included in this Application</u>

- the segment of the Bike Path within the Waterfront Access North ("WAN") Project area, as this is a separate project subject to a previously issued Zoning Permit (between stations 131+19 and 140+96 on attached Design Plans);
- improvements to adjoining areas funded by the Public Investment Action Plan ("PIAP"), such as in Waterfront Park;
- shoreline stabilization; and
- design for pause places, signage, and wayfinding.

Proposed Activities by Design Segment and Schedule

The proposed activities for the first phase of construction are described in detail below by design segment, including the proposed construction schedule. A suite of representative photographs for each segment are provided as a separate attachment and referenced below.

<u>Improvements Proposed for All Sections</u>

The Bike Path will be generally rehabilitated along its existing alignment but widened wherever possible to a paved width of 11' with a 2' aggregate shoulder on each side for runners/walkers.

There will be two areas of major Path realignment that are described below in the section-by-section descriptions. Other improvements that are being designed for the path include centerline striping, appropriate path paint markings and standard signage.

Perkins Pier to King Street

Work along the Bike Path through this section will consist of resurfacing and striping. The portion to be milled and resurfaced (Photo 1) is approximately 150′ in length. The striping will consist of the painting of a 4″ thick white line to better delineate the area of the path where an existing painted yellow stripe is fading (Photo 2). The crossing of Maple Street lacks appropriate crossing markings (Photo 3), this problem will be solved with the painting of a proposed green textured surface, as well as crosswalk lines. The path will be realigned and reconstructed between Maple Street and King Street to eliminate a 'kink' in the path (Photo 4) that exists to allow for a 90° angle crossing over old railroad rails (Sheet 4 – "Layout View (1 of 16)").

Proposed Construction Schedule: November, 2014

King Street to College Street

The focus through this length of the Bike Path will be intersection improvements and enhanced Bike Path delineation. The intersection of the Bike Path and King Street (Photo 5) is proposed to be painted with the above mentioned green textured surface paint that will align Path users to cross the railroad tracks at a 90° angle. This same green textured surface paint is proposed between King Street and College Street (Photo 6) to widen the delineated area and alert non-path users of traveling cyclists and other path users.

Proposed Construction Schedule: November, 2014

College Street to Penny Lane (Waterfront Park)

This stretch of the path consists of two sections; the southern, "Great Lawn" section, and the northern, "Event Grounds" section. The Great Lawn section (Photo 7) will be milled and resurfaced at the existing width in order to rehabilitate the pavement without harming the roots of the existing silver linden trees that line the Path on both sides. The diagonal section of the Bike Path that currently bisects the Event Grounds will be removed and the Bike Path re-routed to the eastern perimeter of the Park where an existing gravel access road is present (Photo 8). Access along the waterfront will remain, so that cyclists and other users will have continuous access around the perimeter of the Event Grounds during most events (Sheet 8 – "Layout View (5 of 16)").

A pervious grass pavement system will be installed along the western side of the realigned Bike Path within the Event Grounds to improve access to the area by event construction and support vehicles. The width will be sufficient to allow for both vehicle parking and unencumbered access

for emergency access during events. The use of pervious grass pavers will minimize the rutting that is a current maintenance issue and allow for stormwater generated by the Bike Path to infiltrate into the underlying soil.

Proposed Construction Schedule: October to November, 2014

<u>WAN to Texaco Beach (Urban Reserve)</u>

The Bike Path from the terminus of WAN through to the end of the Urban Reserve will see a full realignment (Sheets 11-15 – "Layout View (8 of 16)" to "Layout View (12 of 16)"). The pavement conditions through here have deteriorated and have severe drainage issues (Photo 9). The proposed realignment of the Bike Path will lead the path west (Photo 10) away from the existing, damaged paved areas and towards Lake Champlain. Once the path reaches a point approximately 25′ from the top of the shoreline revetment or break in slope, it will travel parallel to the shoreline and connect back to the existing path alignment at station 167+00.

Proposed Construction Schedule: April to July, 2015

<u>Texaco Beach to North Beach</u>

The majority of the work taking place along this length of the Bike Path will be the items listed in the above "Improvements Proposed for All Sections". A connection from the Bike Path to Lakeview Cemetery is also being proposed (Photo 11) in this section. This connection is not yet shown in the layout plans but will likely be a 5′ wide aggregate path to include a gated fence for access to the cemetery. The existing railing (Photo 12) is not safe for path users and will be replaced in all necessary locations.

Proposed Construction Schedule: August to November, 2015

Summary of Lot Coverage by Zoning District

Because of the breadth of the Project, the determination of existing lot coverage was carried out via a geographic information system ("GIS") analysis using available geospatial data provided by the City, including impervious surface coverage by parcel. Survey data for the existing Bike Path alignment collected by VHB was used to supplement this information.

Of the nine parcels intersected by the proposed alignment of the rehabilitated Bike Path, all or portions of 6 parcels are zoned as Downtown Waterfront ("DW"), or Downtown Waterfront – Public Trust ("DW-PT"). Accordingly, there is no restriction on lot coverage for these segments of the Bike Path.

Four of the nine parcels intersected by the Bike Path are zoned in whole or part as Recreation, Conservation and Open Space / Recreation-Greenspace ("RCO-RG") (see Zoning District

Summary and Site Location Map). However, because of their relatively intensive land use or because, in the case of Parcel 028-2-220-000, their relatively thinness, the current percent lot coverage for each exceeds the allowed lot coverage under the Zoning Ordinance (see enclosed Summary of Lot Coverage). These parcels include those housing the Wastewater Treatment Plant, Perkins Pier, and Waterfront Park. The proposed Bike Path improvements would result in only minor increases in the lot coverage for these parcels, as outlined in the enclosed table. Nevertheless, the Applicant understands that the proposed Bike Path improvements will require Conditional Use review and approval.

Also, portions of two of the parcels intersected by the Bike Path are zoned as Urban Reserve ("UR"). The Applicant understands that, for the proposed activities in the UR, the final design plans must indicate clearly where and how existing impervious surfaces will be removed to, at a minimum, offset the same square footage of proposed Bike Path improvements so that there is no change in lot coverage for this Zoning District.

Conditional Use Review Standards

Because the new proposed alignment of the Bike Path will intersect the Riparian and Littoral Conservation Zone, the Applicant hereby agrees to conform to the requirements listed in Section 4.5.4 (c) 4. of the Zoning Ordinance. Furthermore, because of these proposed activities within a Natural Resource Overlay District and because a number of the RCO-RG zoned lots have coverages exceeding their allowable limits, the Applicant understands that this Application is subject to review and approval pursuant to the Conditional Use review provisions of Article 3. An initial response to Section 3.5.6 (a) 1-5 is provided below.

<u>Capacity of Existing or Planned Community Facilities</u>

The Project will have no undue adverse effect on existing or planned community facilities. By its nature, the Bike Path rehabilitation will encourage community recreation and appreciation of the waterfront area and promote healthy lifestyles.

<u>Character of the Area</u>

Because the Project largely occupies the existing alignment and does not propose any new uses, it is consistent with the purposes of the Zoning Districts through which it passes. The realignment of the Bike Path in the UR represents passive use of a publically accessible open space, consistent with Section 4.4.7 of the Zoning Ordinance. The Applicant believes the proposed realignment of the Bike Path in the UR is consistent with Section 4.4.7. (c) 4), which allows for the following conditionally permitted use:

Existing public recreational paths and railroad facilities and their necessary maintenance.

Traffic on Roads and Highways

It is not anticipated that the Project will result in any increased traffic demand such that an undue adverse effect would occur. Though the improvements will likely attract more visitors to the Bike Path, this would occur gradually over time.

City Bylaws and City and State Ordinance

The Project will be constructed and operated in accordance with all applicable City Bylaws and City and State Ordinance.

The Utilization of Renewable Energy Resources

Generally speaking, the Bike Path is not a consumptive use of energy. Accordingly, there is little opportunity for employing renewable energy resources.

We appreciate your assisting in reviewing this application and look forward to the opportunity to discuss the Project before the Conservation Board (June 30th) and Development Review Board (July 1st).

Sincerely,
VANASSE HANGEN BRUSTLIN, INC.

Brad Ketterling
Senior Environmental Scientist

DBK/pwe
Enclosure

cc: Jesse Bridges, Director and Harbormaster, Department of Parks and Recreation

\\vtnfdata\projects\57634.00\docs\Permits\Zoning\2014-06-04_BP_Zoning_Permit_Application.doc

Photo 1. Bike Path around blind corner along Railway Lane. View is to south.

Photo 2. Lack of Bike Path delineation along Railway Lane. View is to south.

Photographs were taken on a variety of dates, all by VHB.

Photo 3. Bike Path crossing at Maple Street. View is to north.

Photo 4. Right angle in Bike Path alignment. Initially aligned to allow for crossing old railroad rails at right angle. View is to south.

Photographs were taken on a variety of dates, all by VHB.

Photo 5. Current Bike Path alignment encouraging crossing railroad tracks at angle. View is to the southwest.

Photo 6. Minimal Bike Path delineation (fading paint) between the high traffic area of King Street and College Street. View is to north.

Photographs were taken on a variety of dates, all by VHB.

Photo 7. View of the Bike Path within the Great Lawn section of Waterfront Park. Path will see minimal work here to avoid harming the existing vegetation. View is to south.

Photo 8. Existing gravel road where Bike Path is to be realigned through the Event Grounds section of Waterfront Park. View is to north.

Photographs were taken on a variety of dates, all by VHB.

Photo 9. Existing pavement conditions in the Urban Reserve. View is to north.

Photo 10. Location in Urban Reserve where full Bike Path realignment will begin. Path will be brought west towards the lake to eventually travel along the lakefront. View is to west.

Photographs were taken on a variety of dates, all by VHB.

Photo 11. View of Bike Path at Lakeview Cemetery. View is to south.

Photo 12. View of non-standard bicycle railing along west side of Bike Path. View is to the southwest.

Photographs were taken on a variety of dates, all by VHB.

CITY OF BURLINGTON
DEPARTMENT OF PARKS AND RECREATION

Parks & Recreation
BURLINGTON, VERMONT

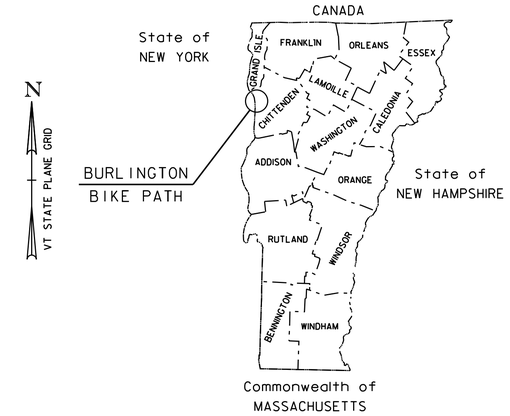

PROPOSED IMPROVEMENT

BURLINGTON BIKE PATH REHABILITATION PROJECT

CITY OF BURLINGTON
COUNTY OF CHITTENDEN

DRAFT PLANS – WORK IN PROGRESS
JUNE 2014

PROJECT LOCATION: LOCATED IN THE COUNTY OF CHITTENDEN, CITY OF BURLINGTON, THE PROJECT BEGINS AT A POINT APPROX. 200 FEET SOUTH OF THE INTERSECTION OF MAPLE STREET AND RAILWAY LANE AT STATION 97+64. THE PROJECT FOLLOWS ALONG LAKE CHAMPLAIN AND EXTENDS NORTHERLY 1.70 MILES TO A POINT APPROX. 150 FEET SOUTH OF THE NORTH BEACH OVERPASS.

PROJECT DESCRIPTION: WORK TO BE PERFORMED UNDER THIS PROJECT INCLUDES REHABILITATION AND WIDENING OF THE EXISTING PATH, CLEARING VEGETATION, PATH REALIGNMENT, DITCHING, CURBING, FENCING, PAVEMENT MARKINGS, SIGNAGE, AND AMENITIES, AND OTHER PATH IMPROVEMENTS.

LENGTH OF PROJECT: 1.70 MILES

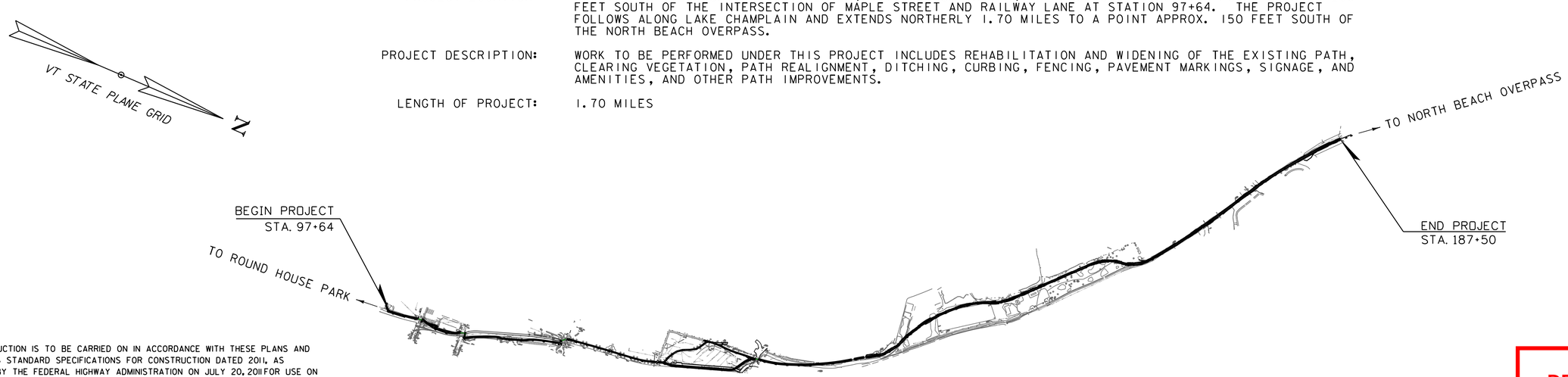

CONSTRUCTION IS TO BE CARRIED ON IN ACCORDANCE WITH THESE PLANS AND THE VTRANS STANDARD SPECIFICATIONS FOR CONSTRUCTION DATED 2011, AS APPROVED BY THE FEDERAL HIGHWAY ADMINISTRATION ON JULY 20, 2011 FOR USE ON THIS PROJECT, INCLUDING ALL SUBSEQUENT REVISIONS AND SUCH REVISED SPECIFICATIONS AND SPECIAL PROVISIONS AS ARE INCORPORATED IN THESE PLANS.

QUALITY ASSURANCE PROGRAM : LEVEL 1

SURVEYED BY : VHB
ALDRICH + ELLIOT, PC
BUTTON PROFESSIONAL LAND SURVEYORS, PC
CROSS CONSULTING ENGINEERINGS

SURVEYED DATE : AUGUST 2013

DATUM
VERTICAL NAVD 88
HORIZONTAL NAD 83 (07)

SCALE IN FEET
1800 0 1800

DRAFT PLANS - DESIGN ONGOING

BURLINGTON PARKS AND RECREATION DIRECTOR
APPROVED _____ DATE _____

PROJECT MANAGER : JEN FRANCIS

PROJECT NAME : BURLINGTON BIKE PATH
PROJECT NUMBER : 57634.00

SHEET 1 OF 19 SHEETS

VHB Vanasse Hangen Brustlin, Inc.

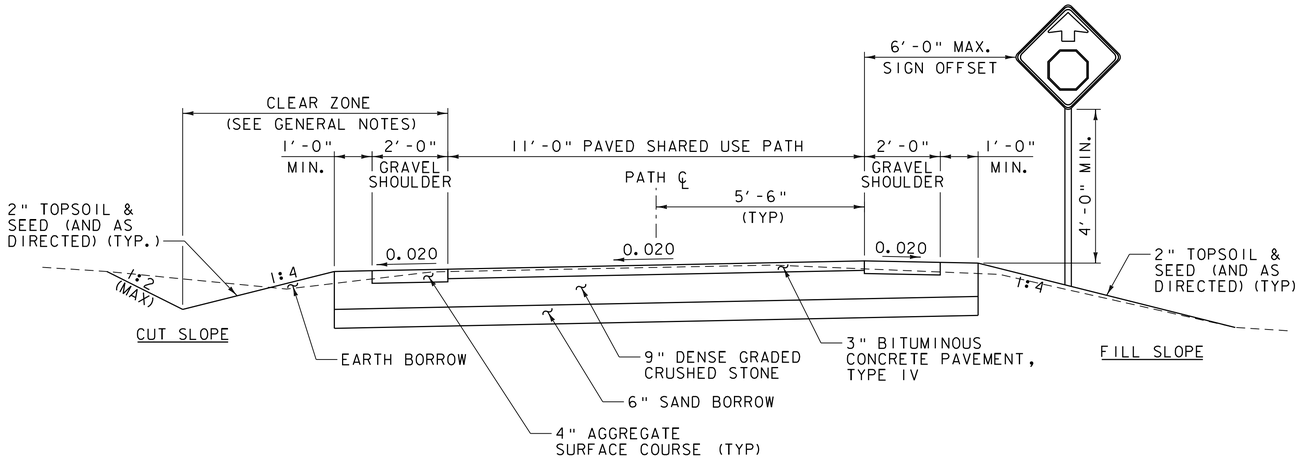

PATH TYPICAL SECTION
(NORMAL CUT/FILL SLOPES)

SCALE 1" = 2'-0"

STATIONING	
BEGIN	END
122+40	123+52
129+12	130+30
140+96	187+50

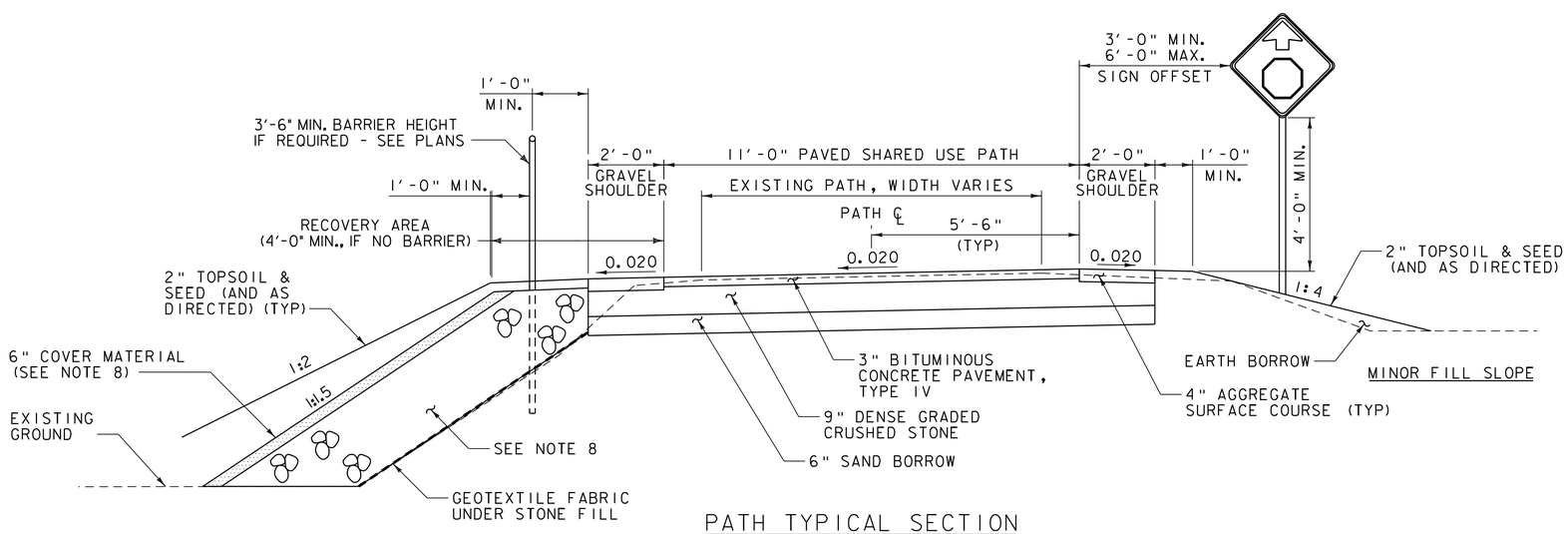

PATH TYPICAL SECTION
(STEEL SIDESLOPE)

SCALE 1" = 2'-0"

GENERAL NOTES:

1. THE MINIMUM PAVED PATH WIDTH SHALL BE 11'-0" UNLESS NOTED OTHERWISE IN THE PLANS.
2. ROADBED SUBGRADE SEPARATOR FABRIC SHALL BE PLACED BETWEEN SUBGRADE AND SUBBASE AT LOCATIONS SHOWN IN THE PLANS OR AS DIRECTED BY THE ENGINEER.
3. THE USE OF UNDERDRAIN SHALL BE AS SHOWN IN THE PLANS.
4. WHEN SAND BORROW IS USED, ITS THICKNESS SHALL BE TRANSITIONED TO OR FROM FULL DEPTH AT THE RATE OF 1:25 ALONG THE LENGTH OF THE PATH TO PREVENT A BUMP FROM OCCURRING AT ITS TERMINUS.
5. THE PATH SHALL HAVE A UNIFORM TWO PERCENT SLOPE IN THE DIRECTION SHOWN IN THE PLANS, AND THE SUBBASE SHALL BE GRADED TO MATCH. ALL CURVED SECTIONS SHALL BE BANKED TOWARD THE INSIDE OF THE CURVE.
6. ALL SHARED USE PATHS SHALL MEET THE REQUIREMENTS OF THE AMERICANS WITH DISABILITIES ACT (ADA) TO THE EXTENTS POSSIBLE GIVEN EXISTING CONDITIONS. REFER TO THE AMERICANS WITH DISABILITIES ACT ACCESSIBILITY GUIDELINES (ADAAG) FOR SPECIFIC DETAILS.
7. ANY TREE ROOTS ENCOUNTERED WITHIN THE EXCAVATION LIMITS SHALL BE SAWCUT AND REMOVED. PAYMENT WILL BE INCIDENTAL TO COMMON EXCAVATION.
8. STONE FILL, TYPE II THAT IS PROPOSED ON ANY SLOPE STEEPER THAN 1:2 SHALL BE 2'-0" DEEP AND SHALL RECEIVE A 6" LAYER OF COVER MATERIAL OVER THE STONE.
   - A) ANY SLOPES ADJACENT TO WETLANDS OR STREAMS SHALL USE GRUBBING MATERIAL AS A COVER FOR THE STONE FILL.
   - B) STONE COVERED SLOPES IN DRY AREAS SHALL USE EXCAVATED EARTH OR EARTH BORROW AS A COVER MATERIAL. COVER MATERIAL SHALL BE SEEDED AND MULCHED.
9. DITCHES WILL RECEIVE THE FOLLOWING TREATMENTS BASED ON THEIR SLOPE, UNLESS SHOWN OTHERWISE ON THE PLANS.
   - A) 0-1% SEED AND MULCH
   - B) 1-2.5% EROSION CONTROL MATTING AND SEED
   - C) 2.5-10% TYPE I STONE FILL - 1'-0" DEPTH
   - D) >10% TYPE II STONE FILL - 2'-0" DEPTH
10. IF THE VOLUME OF RECLAIMED MATERIAL IS NOT SUFFICIENT TO MEET THE REQUIRED LINES & GRADES SHOWN, IT SHALL BE SUPPLEMENTED WITH DENSE GRADED CRUSHED STONE.
11. DETAIL SHEETS AND TRAFFIC CONTROL PLANS WILL BE DEVELOPED AND INCORPORATED IN THE PRELIMINARY PLAN SET.

~~STATIONING NOTES:~~

~~1. THERE IS NO PROPOSED WESTERN SHOULDER FROM STA. 300+00 TO STA. 302+16.~~

~~2. THERE ARE NO PROPOSED SHOULDERS FROM STA. 400+00 TO STA. 411+95. THERE IS NO PROPOSED EASTER SHOULDER FROM STA. 422+35 TO STA. 500+10.~~

~~3. THE PAVED PORTION OF THE PATH NARROWS FROM 11'-0" TO 8'-0" FROM STA. 1131+75 TO STA. 1132+50 AND WIDENS BACK TO 11'-0" FROM STA. 1201+50 TO STA. 1202+25. A TAPER OF 25:1 IS TO BE USED.~~

~~4. THE PAVED PORTION OF THE PATH WIDENS FROM 11'-0" TO 13'-0" FROM STA. 111+50 TO STA. 112+25 AND NARROWS BACK TO 11'-0" FROM STA. 116+50 TO STA. 117+25. A TAPER OF 25:1 IS TO BE USED. THE PAVED PORTION ALSO WIDENS FROM 11'-0" TO 13'-0" FROM STA. 130+00 TO STA. 130+75 AND NARROWS BACK TO 11'-0" FROM STA. 131+75 TO STA. 132+50.~~

DRAFT PLANS - DESIGN ONGOING

VHB Vanasse Hangen Brustlin, Inc.

PROJECT NAME: BURLINGTON BIKE PATH	
PROJECT NUMBER: 57634.00	
FILE NAME: z57634typ.dgn	PLOT DATE: 6/4/2014
PROJECT LEADER: M.A. COLGAN	DRAWN BY: E.B. PARIZO
DESIGNED BY: E.B. PARIZO	CHECKED BY: M.J. SERVETAS
PATH TYPICAL SECTIONS (1 OF 2)	SHEET 2 OF 19

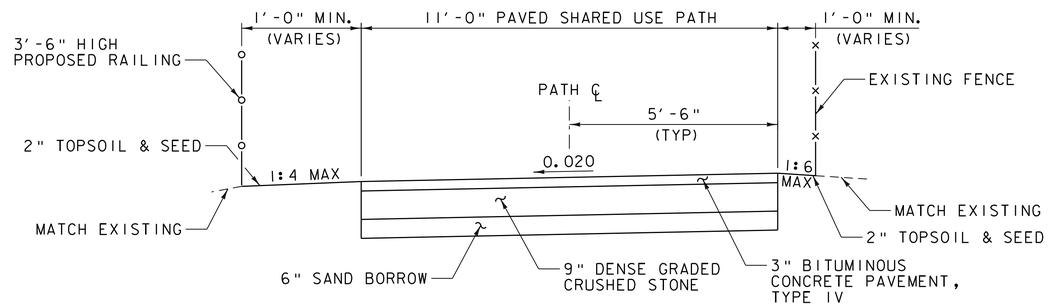

MAPLE STREET TO KING STREET PATH TYPICAL SECTION

SCALE 1" = 2'-0"

STATIONING	
BEGIN	END
100+68	104+22

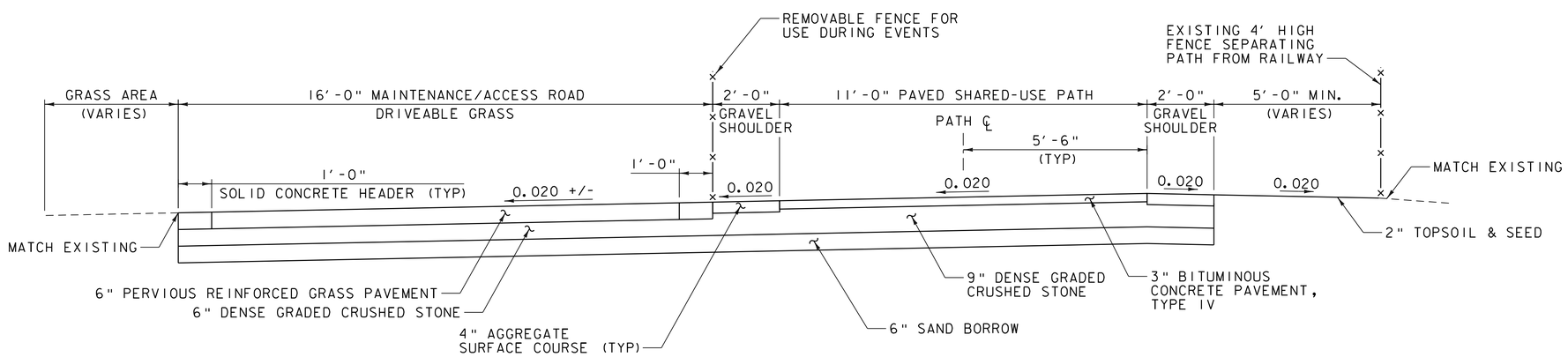

PROPOSED WATERFRONT PARK PATH TYPICAL SECTION

SCALE 1" = 2'-0"

STATIONING	
BEGIN	END
123+52	129+12

DRAFT PLANS - DESIGN ONGOING

Vanasse Hangen Brustlin, Inc.

PROJECT NAME: BURLINGTON BIKE PATH	
PROJECT NUMBER: 57634.00	
FILE NAME: z57634typ.dgn	PLOT DATE: 6/4/2014
PROJECT LEADER: M.A. COLGAN	DRAWN BY: E.B. PARIZO
DESIGNED BY: E.B. PARIZO	CHECKED BY: M.J. SERVETAS
PATH TYPICAL SECTIONS (2 OF 2)	SHEET 3 OF 19

EXCAVATION OF SURFACES & PAVEMENTS
STA. 101+20 TO STA. 102+09, LT
STA. 100+62.50 TO STA. 100+68.50, LT
STA. 100+62.80 TO STA. 100+68.20, RT

REMOVE RAILING
STA. 97+77 TO STA. 98+82, RT
STA. 98+97 TO STA. 100+18, LT
STA. 100+90 TO STA. 102+75, LT

3'-6" BICYCLE RAILING
STA. 99+10 TO 100+25, LT
STA. 100+68 TO STA. 102+75, LT

2'X10' DETECTABLE WARNING SURFACE
STA. 100+25
STA. 100+59

REMOVE BOLLARDS
STA. 100+41 TO STA. 100+85, LT

PORTLAND CEMENT CONCRETE SIDEWALK (5 INCH)
STA. 100+63.50 TO STA. 100+68.50, LT
STA. 100+62.80 TO STA. 100+68.80, RT

VERTICAL GRANITE CURB
STA. 97+45 TO STA. 99+05, RT
STA. 100+25, LT
STA. 100+55, RT
STA. 100+58, LT

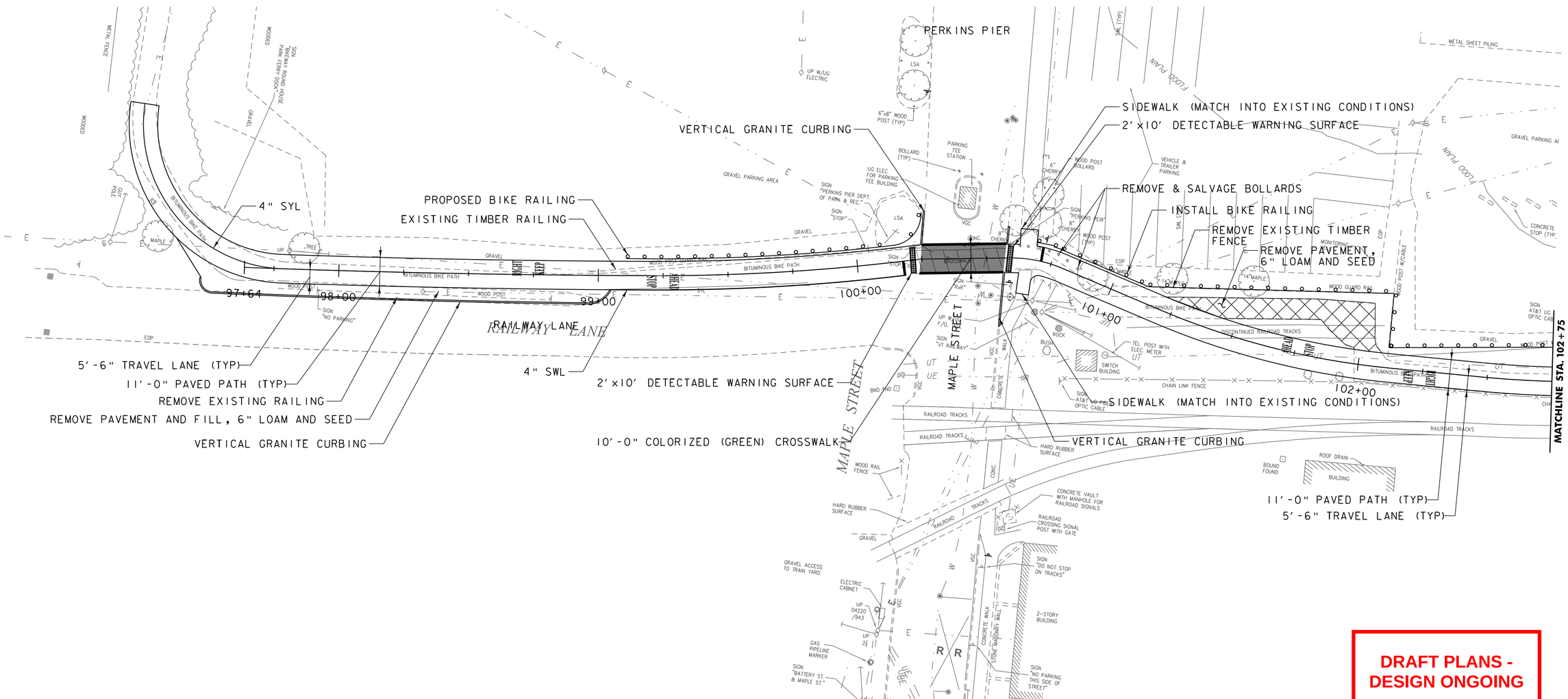

SCALE 1" = 20'-0"
20 0 20

DRAFT PLANS - DESIGN ONGOING

VHB Vanasse Hangen Brustlin, Inc.

PROJECT NAME: BURLINGTON BIKE PATH	
PROJECT NUMBER: 57634.00	
FILE NAME: z57634bdr_nul.dgn	PLOT DATE: 6/4/2014
PROJECT LEADER: M.A. COLGAN	DRAWN BY: D.A. GINGRAS
DESIGNED BY: D.A. GINGRAS	CHECKED BY: M.A. COLGAN
LAYOUT VIEWS (1 OF 16)	SHEET 4 OF 19

3'-6" BICYCLE RAILING
STA. 100+25 TO 104+16, LT

REMOVE TREE
STA. 103+59, LT

2'X10' DETECTABLE WARNING SURFACE
STA. 104+19
STA. 105+06, 6.6' RT

PORTLAND CEMENT CONCRETE SIDEWALK (5 INCH)
STA. 100+63.50 TO STA. 100+68.50, LT
STA. 100+62.80 TO STA. 100+68.80, RT

VERTICAL GRANITE CURB
STA. 104+16, 10.7' LT - 104+22, 8' RT
STA. 104+69, 3.4' RT - 104+82, 3.7' RT
STA. 104+91, 3.7' RT - 105+04, 7.3' RT
STA. 105+08, 10.3' LT - 105+11, 14.1' RT

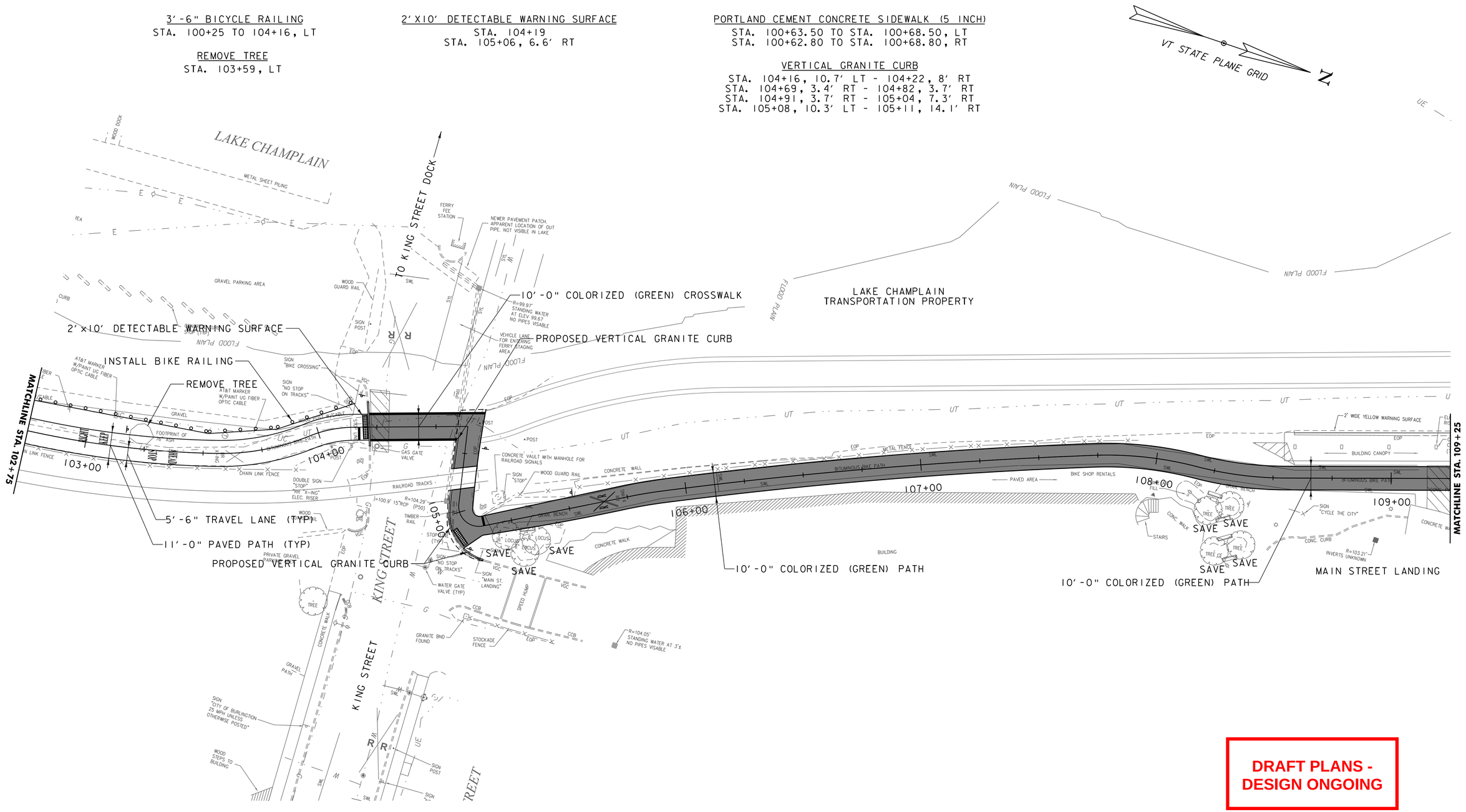

SCALE 1" = 20'-0"
20 0 20

DRAFT PLANS - DESIGN ONGOING

Vanasse Hangen Brustlin, Inc.

PROJECT NAME: BURLINGTON BIKE PATH	
PROJECT NUMBER: 57634.00	
FILE NAME: z57634bdr_nul.dgn	PLOT DATE: 6/4/2014
PROJECT LEADER: M.A. COLGAN	DRAWN BY: D.A. GINGRAS
DESIGNED BY: D.A. GINGRAS	CHECKED BY: M.A. COLGAN
LAYOUT VIEWS (2 OF 16)	SHEET 5 OF 19

PORTLAND CEMENT CONCRETE SIDEWALK (5 INCH)
STA. 113+29, 15' RT TO STA. 113+45, 4.4' RT
STA. 113+52.5, 4.3' RT TO STA. 113+62.4, 13.4' RT

VERTICAL GRANITE CURB
STA. 113+49.6, 19.4' (25' LONG)

2'X10' DETECTABLE WARNING SURFACE
STA. 104+19
STA. 113+62.5
STA. 114+20.6

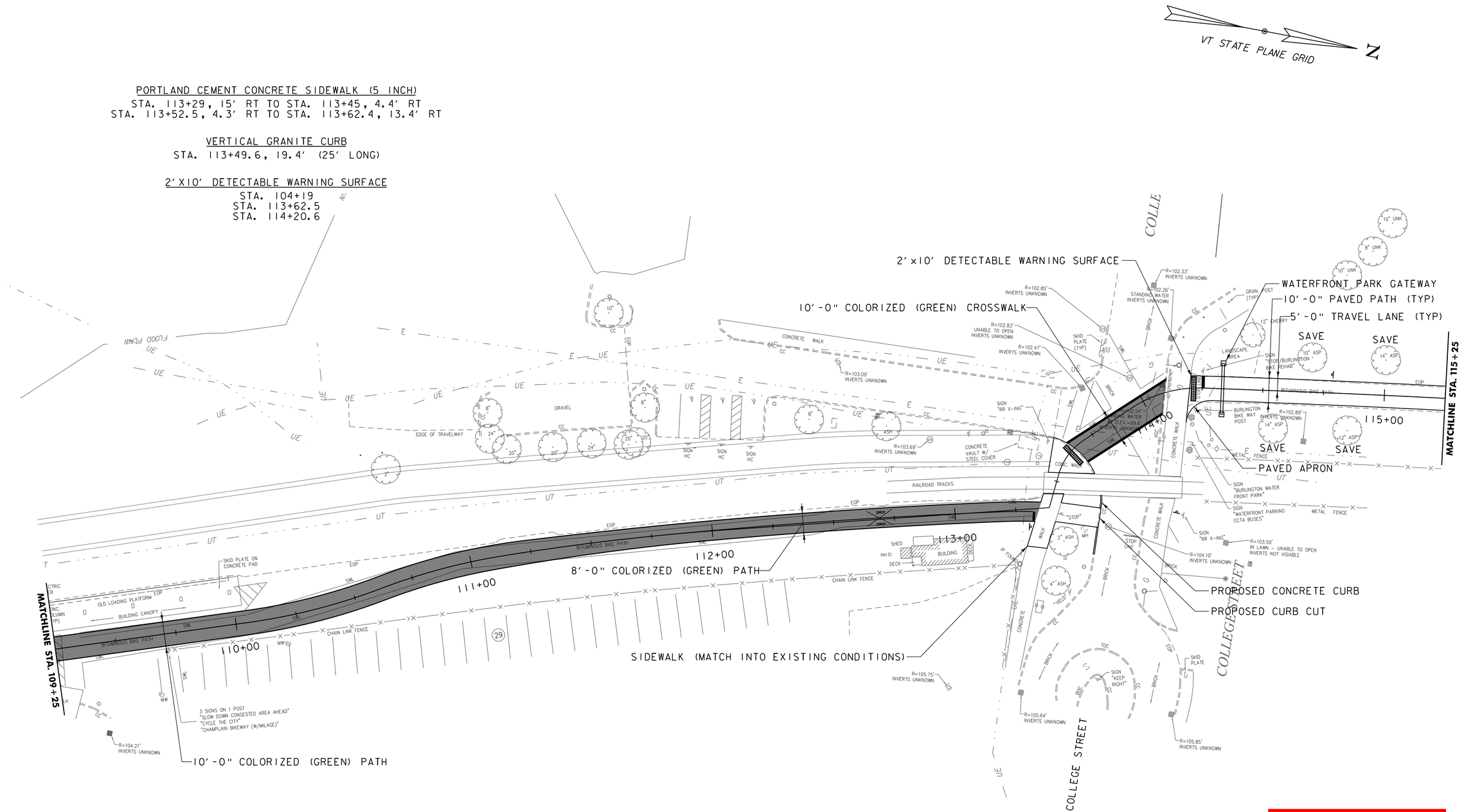

DRAFT PLANS - DESIGN ONGOING

SCALE 1" = 20'-0"
20 0 20

VHB Vanasse Hangen Brustlin, Inc.

PROJECT NAME: BURLINGTON BIKE PATH	
PROJECT NUMBER: 57634.00	
FILE NAME: z57634bdr_nul.dgn	PLOT DATE: 6/4/2014
PROJECT LEADER: M.A. COLGAN	DRAWN BY: D.A. GINGRAS
DESIGNED BY: D.A. GINGRAS	CHECKED BY: M.A. COLGAN
LAYOUT VIEWS (3 OF 16)	SHEET 6 OF 19

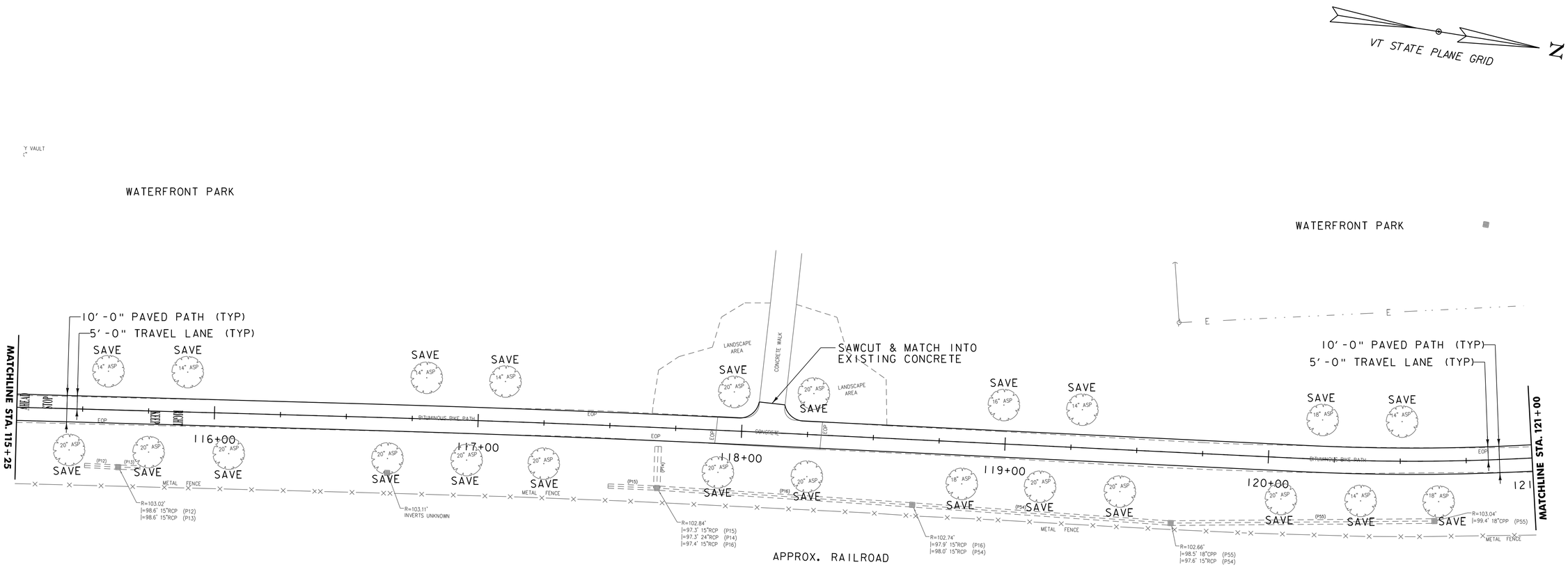

DRAFT PLANS - DESIGN ONGOING

SCALE 1" = 20'-0"
20 0 20

VHB Vanasse Hangen Brustlin, Inc.

PROJECT NAME: BURLINGTON BIKE PATH	
PROJECT NUMBER: 57634.00	
FILE NAME: z57634bdr_nul.dgn	PLOT DATE: 6/4/2014
PROJECT LEADER: M.A. COLGAN	DRAWN BY: D.A. GINGRAS
DESIGNED BY: D.A. GINGRAS	CHECKED BY: M.A. COLGAN
LAYOUT VIEWS (4 OF 16)	SHEET 7 OF 19

EXCAVATION OF SURFACES & PAVEMENTS
STA. 122+80, 6.4' LT TO STA. 126+82, 224' LT

REMOVE ALL BOULDERS
STA 126+20 - 127+00

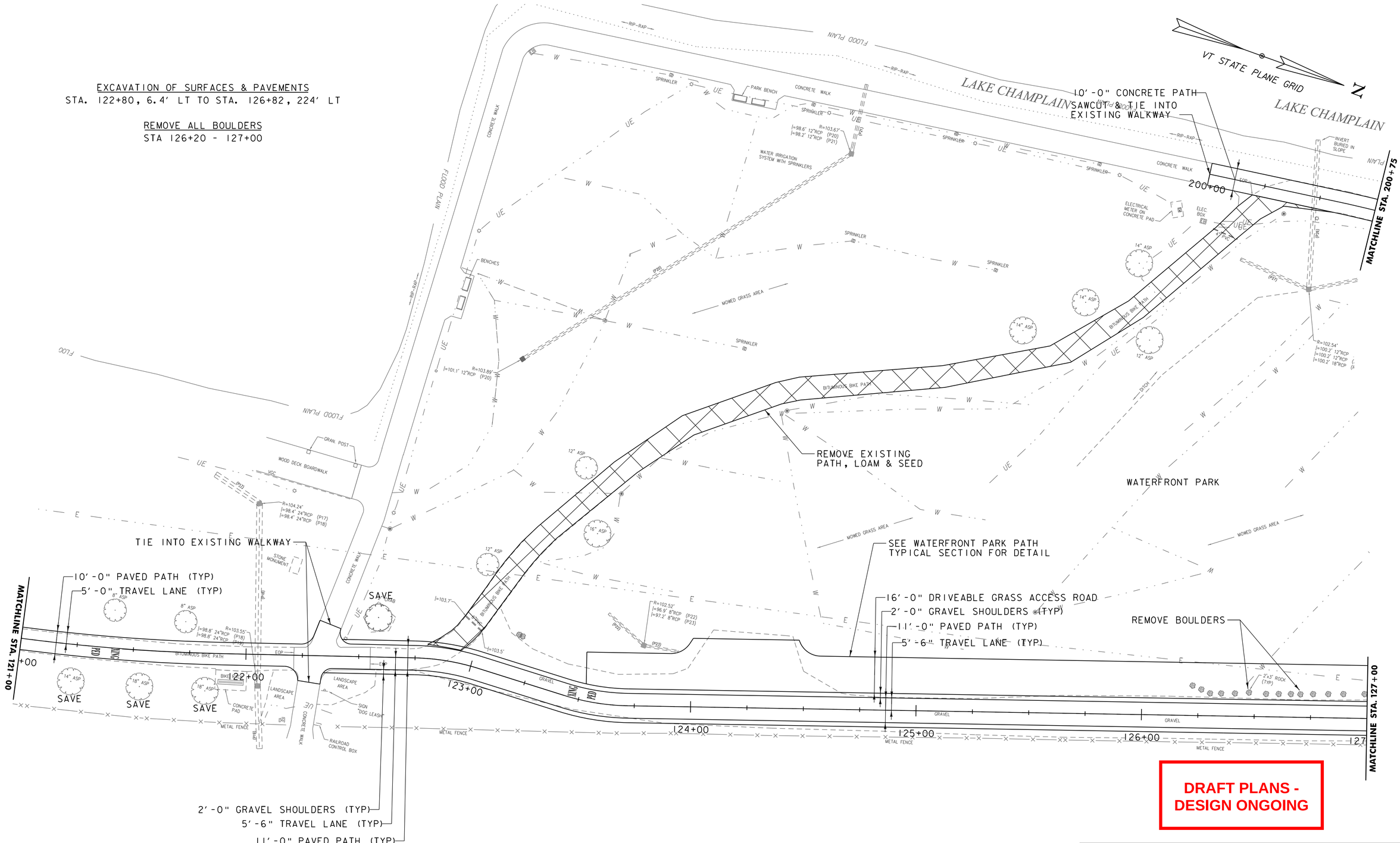

DRAFT PLANS - DESIGN ONGOING

SCALE 1" = 20'-0"
20 0 20

VHB Vanasse Hangen Brustlin, Inc.

PROJECT NAME: BURLINGTON BIKE PATH	
PROJECT NUMBER: 57634.00	
FILE NAME: z57634bdr_nul.dgn	PLOT DATE: 6/4/2014
PROJECT LEADER: M.A. COLGAN	DRAWN BY: D.A. GINGRAS
DESIGNED BY: D.A. GINGRAS	CHECKED BY: M.A. COLGAN
LAYOUT VIEWS (5 OF 16)	SHEET 8 OF 19

REMOVE ALL BOULDERS
STA 127+00 LT - 128+73 LT
STA 128+58 RT - 130+70 LT

EXCAVATION OF SURFACES & PAVEMENTS
STA. 130+55, 43.3' LT TO STA. 131+08, 7.5' LT

2'X10' DETECTABLE WARNING SURFACE
STA. 131+17.1
STA. 131+44.8

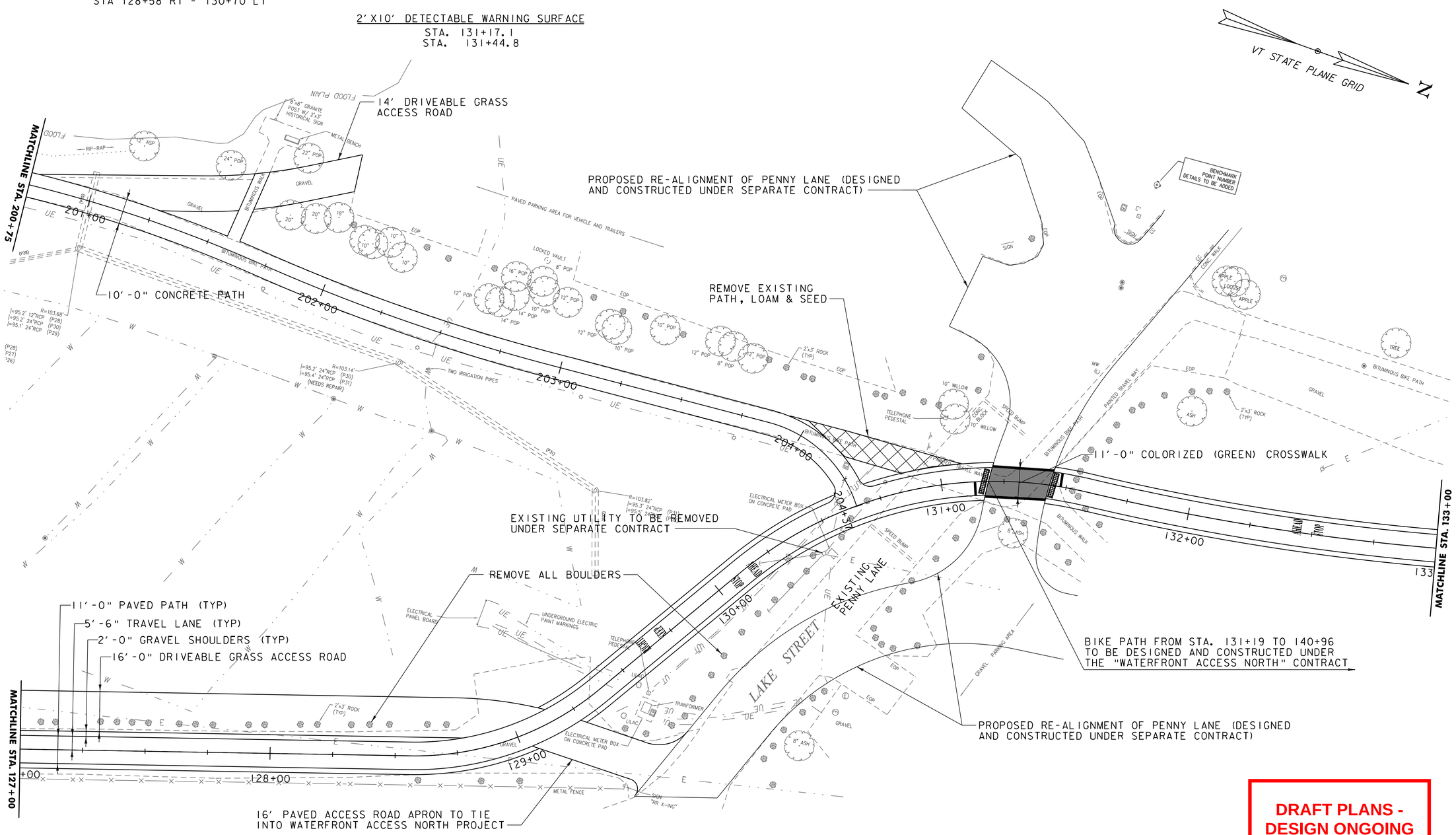

SCALE 1" = 20'-0"
20 0 20

DRAFT PLANS - DESIGN ONGOING

Vanasse Hangen Brustlin, Inc.

PROJECT NAME: BURLINGTON BIKE PATH	
PROJECT NUMBER: 57634.00	
FILE NAME: z57634bdr_nul.dgn	PLOT DATE: 6/4/2014
PROJECT LEADER: M.A. COLGAN	DRAWN BY: D.A. GINGRAS
DESIGNED BY: D.A. GINGRAS	CHECKED BY: M.A. COLGAN
LAYOUT VIEWS (6 OF 16)	SHEET 9 OF 19

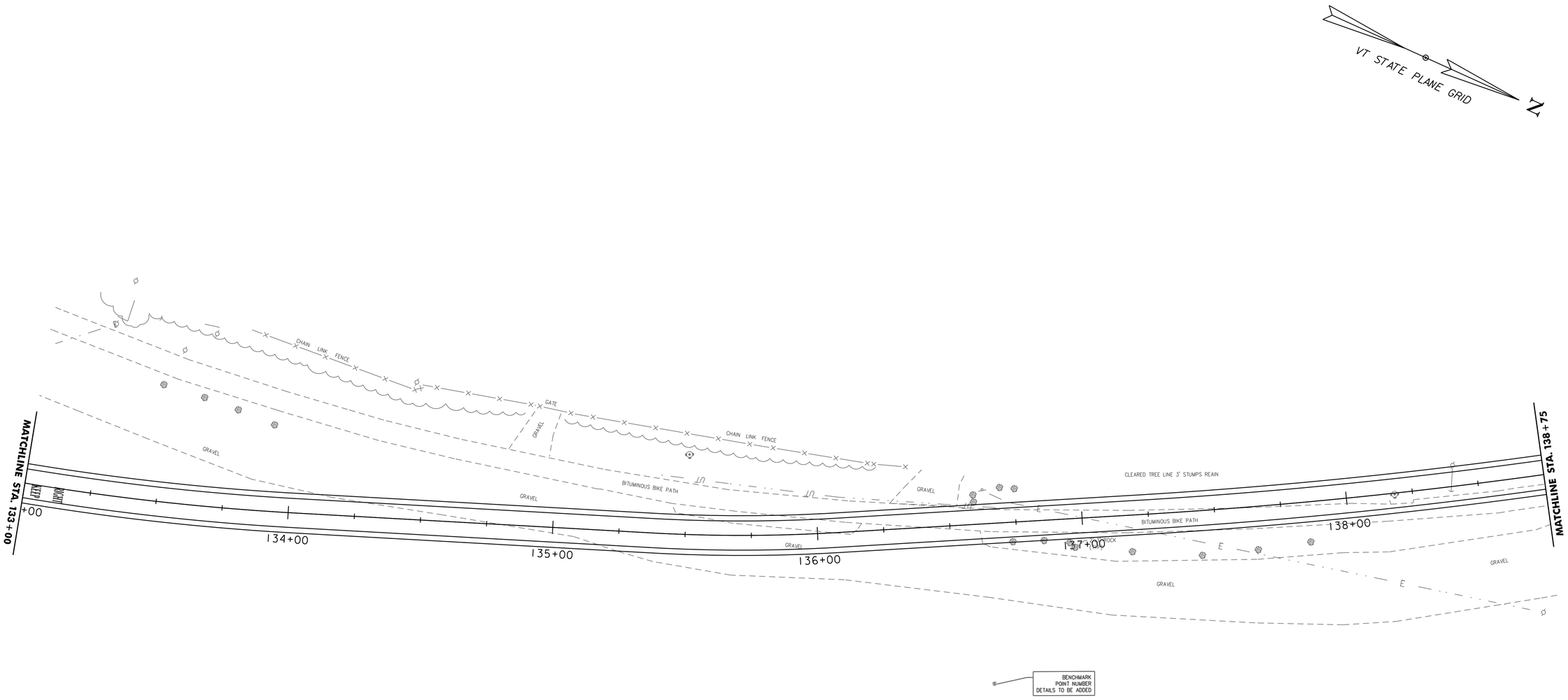

DRAFT PLANS - DESIGN ONGOING

NOTE:

THE ENTIRETY OF THE BIKE PATH SEEN ON THIS LAYOUT SHEET IS BEING CONSTRUCTED UNDER THE "WATERFRONT ACCESS NORTH" CONTRACT. FOR THIS REASON, NO WORK IS BEING CALLED OUT ON THIS LAYOUT SHEET.

SCALE 1" = 20'-0"
20 0 20

Vanasse Hangen Brustlin, Inc.

PROJECT NAME: BURLINGTON BIKE PATH	
PROJECT NUMBER: 57634.00	
FILE NAME: z57634bdr_nul.dgn	PLOT DATE: 6/4/2014
PROJECT LEADER: M.A. COLGAN	DRAWN BY: D.A. GINGRAS
DESIGNED BY: D.A. GINGRAS	CHECKED BY: M.A. COLGAN
LAYOUT VIEWS (7 OF 16)	SHEET 10 OF 19

EXCAVATION OF SURFACES & PAVEMENTS
STA. 144+03, 13.7' LT TO STA. 144+37, 11.7' LT

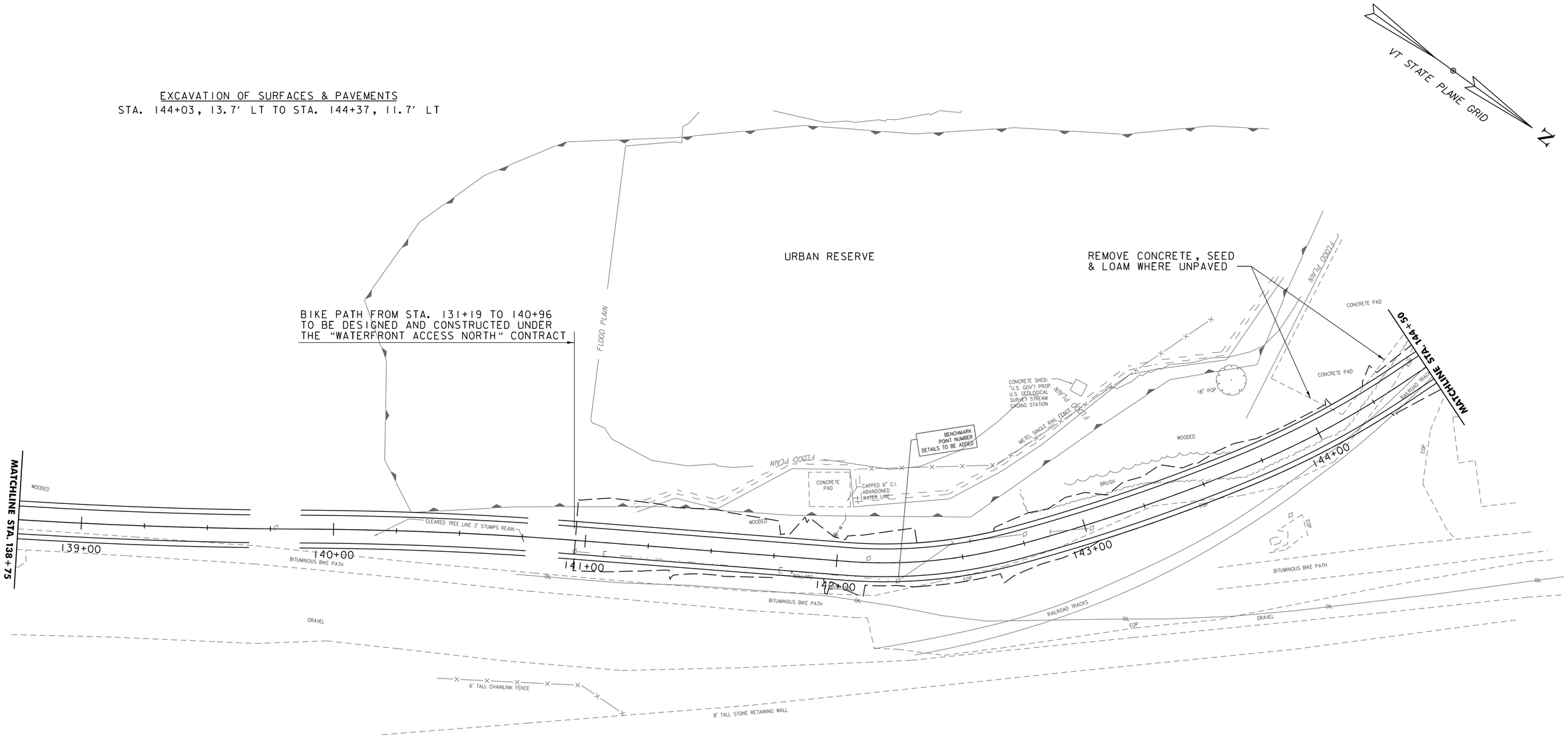

DRAFT PLANS - DESIGN ONGOING

SCALE 1" = 20'-0"
20 0 20

Vanasse Hangen Brustlin, Inc.

PROJECT NAME: BURLINGTON BIKE PATH	
PROJECT NUMBER: 57634.00	
FILE NAME: z57634bdr_nul.dgn	PLOT DATE: 6/4/2014
PROJECT LEADER: M.A. COLGAN	DRAWN BY: D.A. GINGRAS
DESIGNED BY: D.A. GINGRAS	CHECKED BY: M.A. COLGAN
LAYOUT VIEWS (8 OF 16)	SHEET 11 OF 19

REMOVE FENCE
STA. 148+17 TO STA. 150+00

VT STATE PLANE GRID

N

REMOVE FENCE

URBAN RESERVE

GRANITE BOULDER PILE

WOODED

WOODED

MATCHLINE STA. 150+25

150+00

149+00

148+00

147+00

146+00

145+00

MATCHLINE STA. 144+50

2'-0" GRAVEL SHOULDERS (TYP)
5'-6" TRAVEL LANE (TYP)
11'-0" PAVED PATH (TYP)

EXISTING BURLINGTON DOG PARK

DOG PARK

DOG PARK

CHAIN LINK FENCE

CHAIN LINK FENCE

CHAIN LINK FENCE

SIGN "PICK UP YOUR DOG POOP WITH BAGS"

SIGN "DOG PARK RULES"

SIGN "DOG PARK INFO"

GATE

PATH

BENCHMARK POINT NUMBER DETAILS TO BE ADDED

BRUSH AREA

BRUSH AREA

PILE OF UTILITY POLES

BITUMINOUS BIKE PATH

BITUMINOUS BIKE PATH

GRAVEL

GRAVEL

GRAVEL

OIL

OIL

OIL

OIL

SHEET PILING

BROOK UP CONCRETE FOUNDATION

+100.7'

+101.0'

FLOOD PLAIN

FLOOD PLAIN

EDGE

EDGE

EDGE

BRUSH

RAILROAD TRACKS

CONCRETE PAD

E

DRAFT PLANS - DESIGN ONGOING

SCALE 1" = 20'-0"
20 0 20

Vanasse Hangen Brustlin, Inc.

PROJECT NAME: BURLINGTON BIKE PATH	
PROJECT NUMBER: 57634.00	
FILE NAME: z57634bdr_nul.dgn	PLOT DATE: 6/4/2014
PROJECT LEADER: M.A. COLGAN	DRAWN BY: D.A. GINGRAS
DESIGNED BY: D.A. GINGRAS	CHECKED BY: M.A. COLGAN
LAYOUT VIEWS (9 OF 16)	SHEET 12 OF 19

EXCAVATION OF SURFACES & PAVEMENTS
STA. 144+03, 13.7' LT TO STA. 144+37, 11.7' LT

REMOVE FENCE
STA. 152+50, RT TO STA. 153+15, RT

VT STATE PLANE GRID

MATCHLINE STA. 150+25

MATCHLINE STA. 155+50

151+00

152+00

153+00

154+00

155+00

2'-0" GRAVEL SHOULDERS (TYP)
5'-6" TRAVEL LANE (TYP)
11'-0" PAVED PATH (TYP)

REMOVE CONCRETE, SEED & LOAM WHERE UNPAVED

REMOVE FENCE

REMOVE CONCRETE, SEED & LOAM WHERE UNPAVED

2'-0" GRAVEL SHOULDERS (TYP)
5'-6" TRAVEL LANE (TYP)
11'-0" PAVED PATH (TYP)

WOODED
BRUSH
FLOOD PLAIN
CONCRETE RAMP
CONCRETE PAD
DOG PARK
SIGN "PICK UP YOUR DOG POOP WITH BAGS"
CHAIN LINK FENCE
GATE
BENCHMARK POINT NUMBER DETAILS TO BE ADDED
BITUMINOUS BIKE PATH
GRAVEL
OIL
PAVED AREA
BRUSH AREA
EOP
EOG
RAISED CONCRETE PAD
5' DIA BOULDER
WOODED AREA CLE.

DRAFT PLANS - DESIGN ONGOING

SCALE 1" = 20'-0"
20 0 20

Vanasse Hangen Brustlin, Inc.

PROJECT NAME: BURLINGTON BIKE PATH	
PROJECT NUMBER: 57634.00	
FILE NAME: z57634bdr_nul.dgn	PLOT DATE: 6/4/2014
PROJECT LEADER: M.A. COLGAN	DRAWN BY: D.A. GINGRAS
DESIGNED BY: D.A. GINGRAS	CHECKED BY: M.A. COLGAN
LAYOUT VIEWS (10 OF 16)	SHEET 13 OF 19

EXCAVATION OF SURFACES & PAVEMENTS
STA. 155+50 TO STA. 158+02, 30' LT & RT

REMOVE TREE
STA. 160+12, 1.2' RT

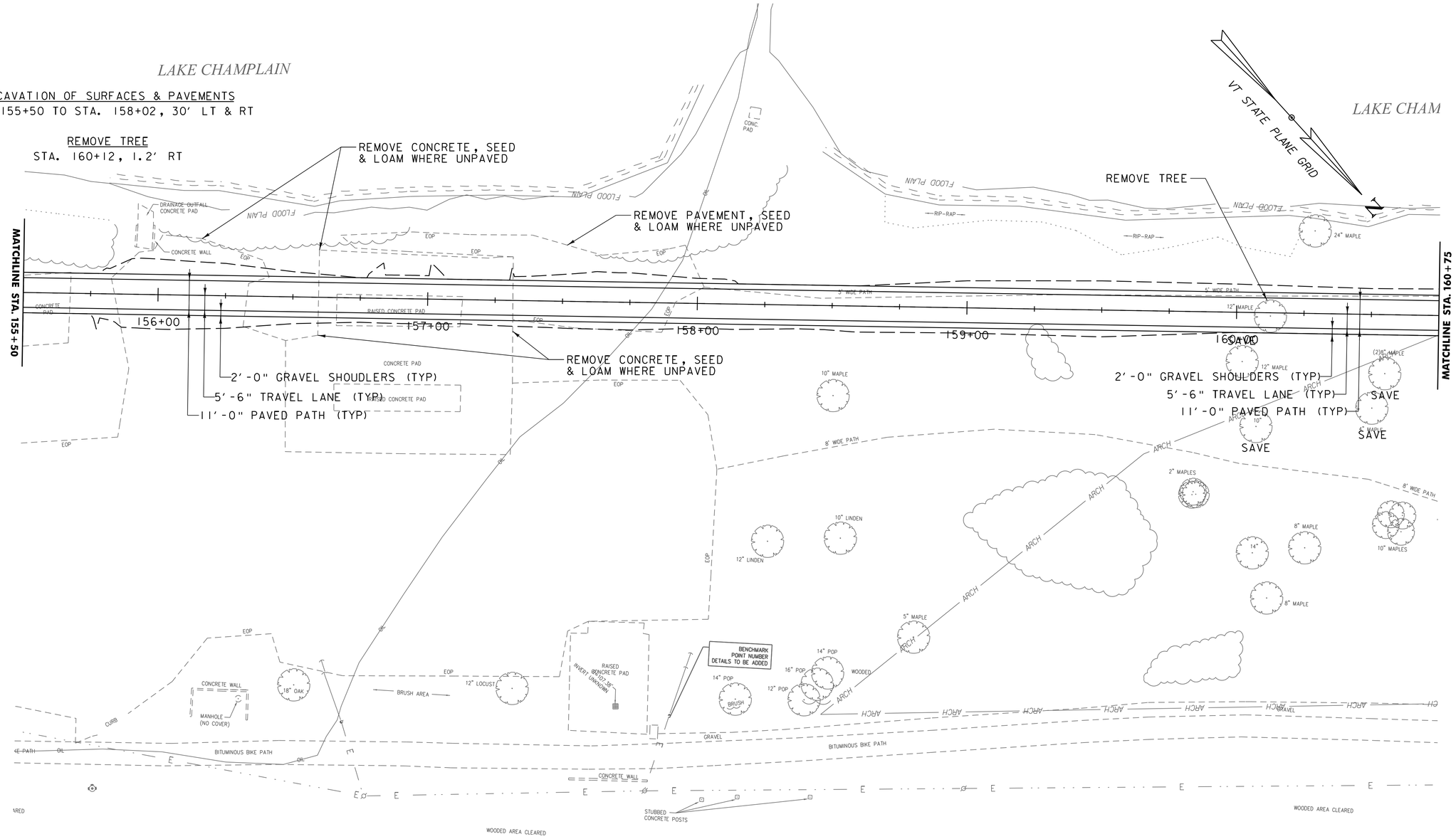

DRAFT PLANS - DESIGN ONGOING

SCALE 1" = 20'-0"
20 0 20

Vanasse Hangen Brustlin, Inc.

PROJECT NAME: BURLINGTON BIKE PATH	
PROJECT NUMBER: 57634.00	
FILE NAME: z57634bdr_nul.dgn	PLOT DATE: 6/4/2014
PROJECT LEADER: M.A. COLGAN	DRAWN BY: D.A. GINGRAS
DESIGNED BY: D.A. GINGRAS	CHECKED BY: M.A. COLGAN
LAYOUT VIEWS (11 OF 16)	SHEET 14 OF 19

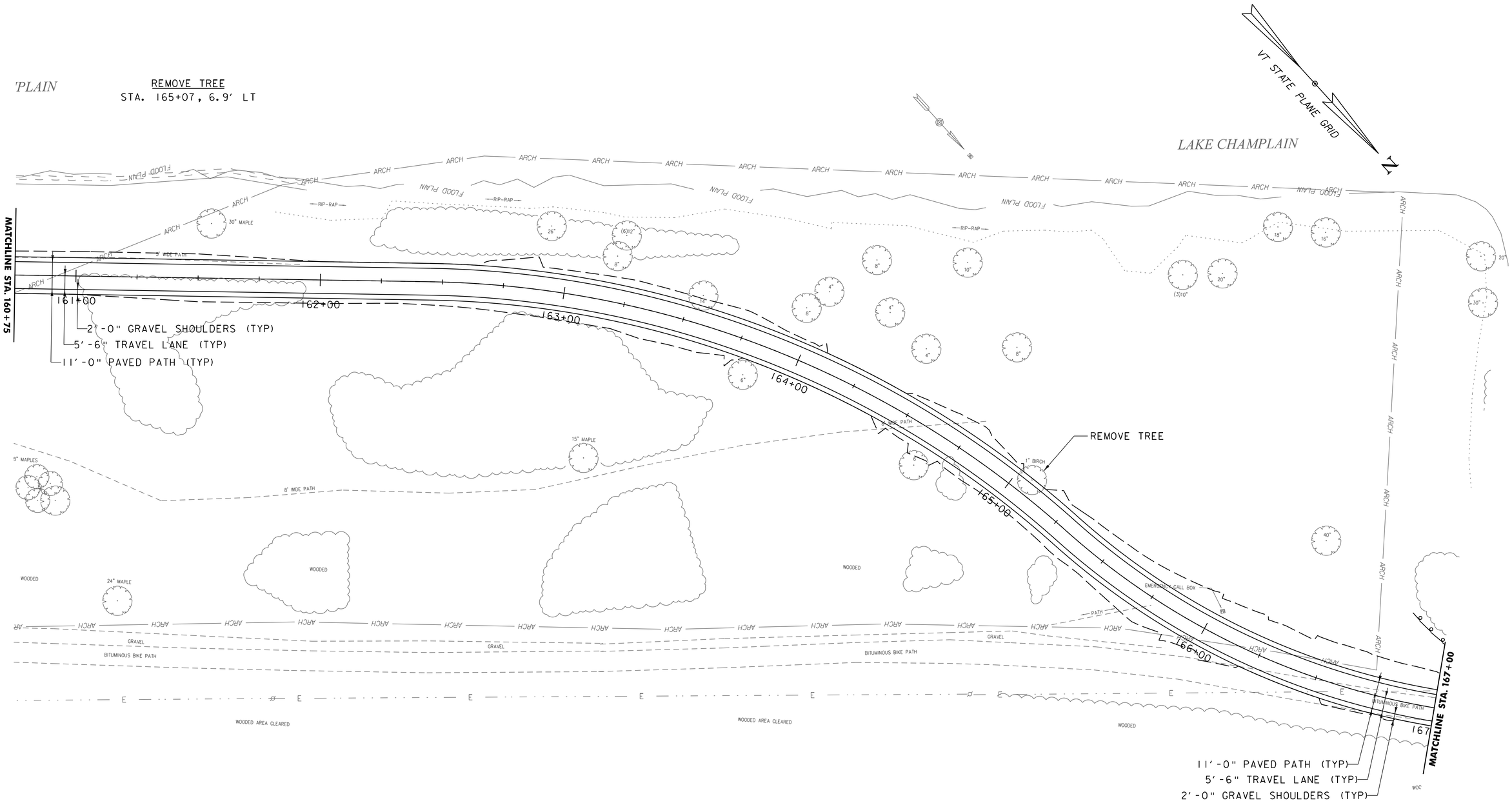

DRAFT PLANS - DESIGN ONGOING

SCALE 1" = 20'-0"
20 0 20

Vanasse Hangen Brustlin, Inc.

PROJECT NAME: BURLINGTON BIKE PATH	
PROJECT NUMBER: 57634.00	
FILE NAME: z57634bdr_nul.dgn	PLOT DATE: 6/4/2014
PROJECT LEADER: M.A. COLGAN	DRAWN BY: D.A. GINGRAS
DESIGNED BY: D.A. GINGRAS	CHECKED BY: M.A. COLGAN
LAYOUT VIEWS (12 OF 16)	SHEET 15 OF 19

CONSTRUCTION NOTES TO BE ADDED

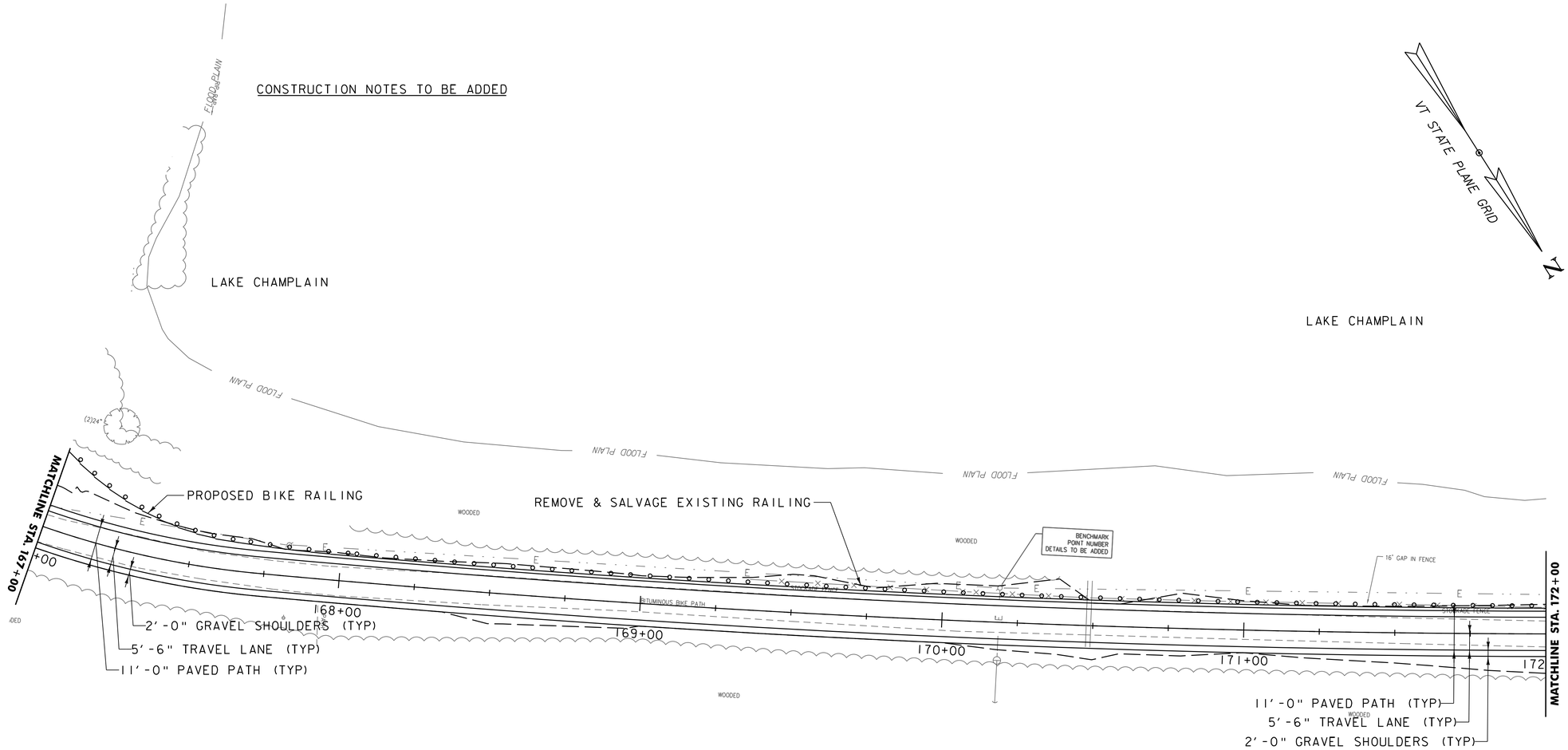

DRAFT PLANS - DESIGN ONGOING

SCALE 1" = 20'-0"
20 0 20

VHB Vanasse Hangen Brustlin, Inc.

PROJECT NAME: BURLINGTON BIKE PATH	
PROJECT NUMBER: 57634.00	
FILE NAME: z57634bdr_nul.dgn	PLOT DATE: 6/4/2014
PROJECT LEADER: M.A. COLGAN	DRAWN BY: D.A. GINGRAS
DESIGNED BY: D.A. GINGRAS	CHECKED BY: M.A. COLGAN
LAYOUT VIEWS (13 OF 16)	SHEET 16 OF 19

CONSTRUCTION NOTES TO BE ADDED

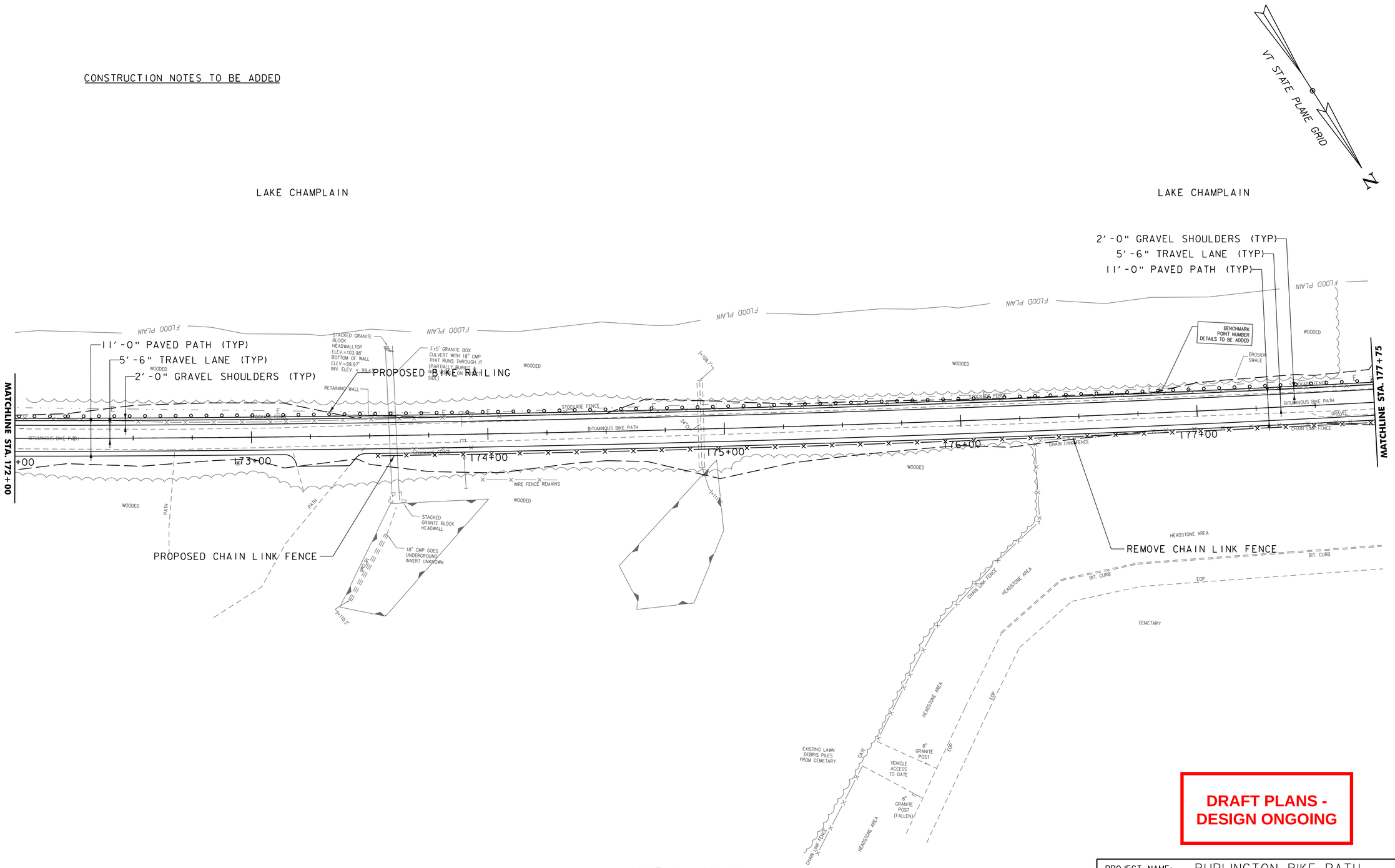

SCALE 1" = 20'-0"
20 0 20

DRAFT PLANS - DESIGN ONGOING

Vanasse Hangen Brustlin, Inc.

PROJECT NAME: BURLINGTON BIKE PATH	
PROJECT NUMBER: 57634.00	
FILE NAME: z57634bdr_nul.dgn	PLOT DATE: 6/4/2014
PROJECT LEADER: M.A. COLGAN	DRAWN BY: D.A. GINGRAS
DESIGNED BY: D.A. GINGRAS	CHECKED BY: M.A. COLGAN
LAYOUT VIEWS (14 OF 16)	SHEET 17 OF 19

CONSTRUCTION NOTES TO BE ADDED

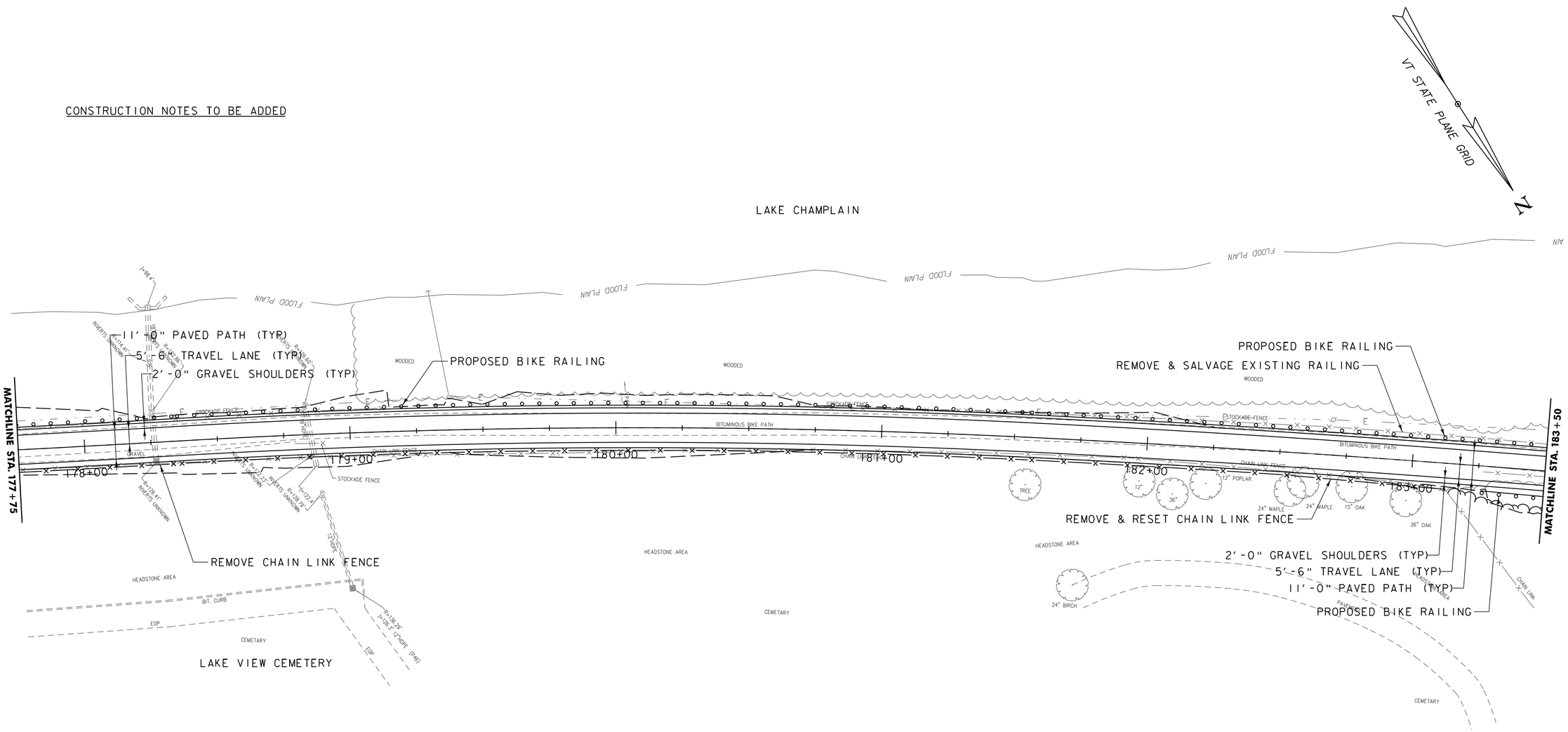

DRAFT PLANS - DESIGN ONGOING

SCALE 1" = 20'-0"
20 0 20

Vanasse Hangen Brustlin, Inc.

PROJECT NAME: BURLINGTON BIKE PATH	
PROJECT NUMBER: 57634.00	
FILE NAME: z57634bdr_nul.dgn	PLOT DATE: 6/4/2014
PROJECT LEADER: M.A. COLGAN	DRAWN BY: D.A. GINGRAS
DESIGNED BY: D.A. GINGRAS	CHECKED BY: M.A. COLGAN
LAYOUT VIEWS (15 OF 16)	SHEET 18 OF 19

CONSTRUCTION NOTES TO BE ADDED

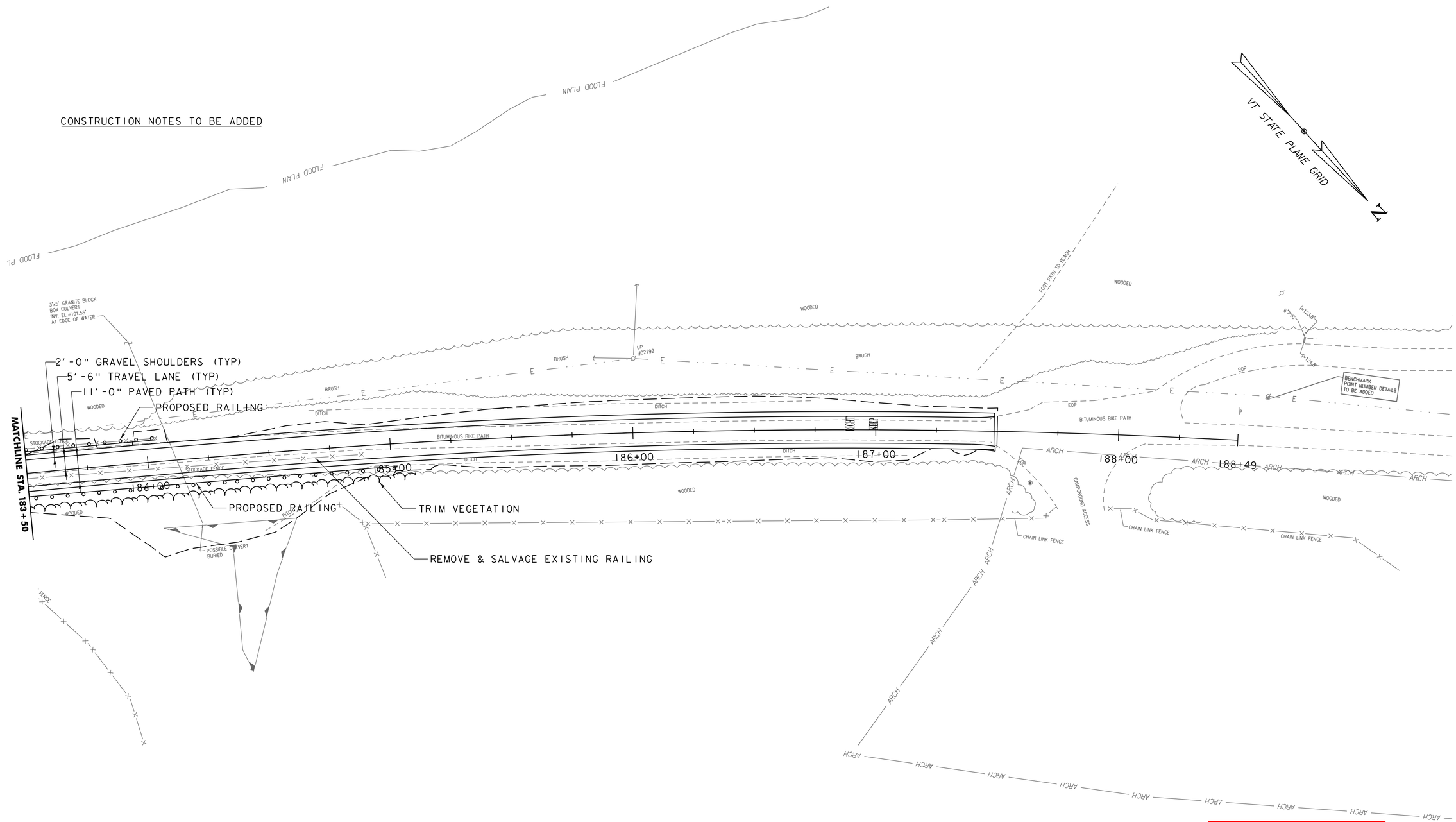

DRAFT PLANS - DESIGN ONGOING

SCALE 1" = 20'-0"
20 0 20

Vanasse Hangen Brustlin, Inc.

PROJECT NAME: BURLINGTON BIKE PATH	
PROJECT NUMBER: 57634.00	
FILE NAME: z57634bdr_nul.dgn	PLOT DATE: 6/4/2014
PROJECT LEADER: M.A. COLGAN	DRAWN BY: D.A. GINGRAS
DESIGNED BY: D.A. GINGRAS	CHECKED BY: M.A. COLGAN
LAYOUT VIEWS (16 OF 16)	SHEET 19 OF 19

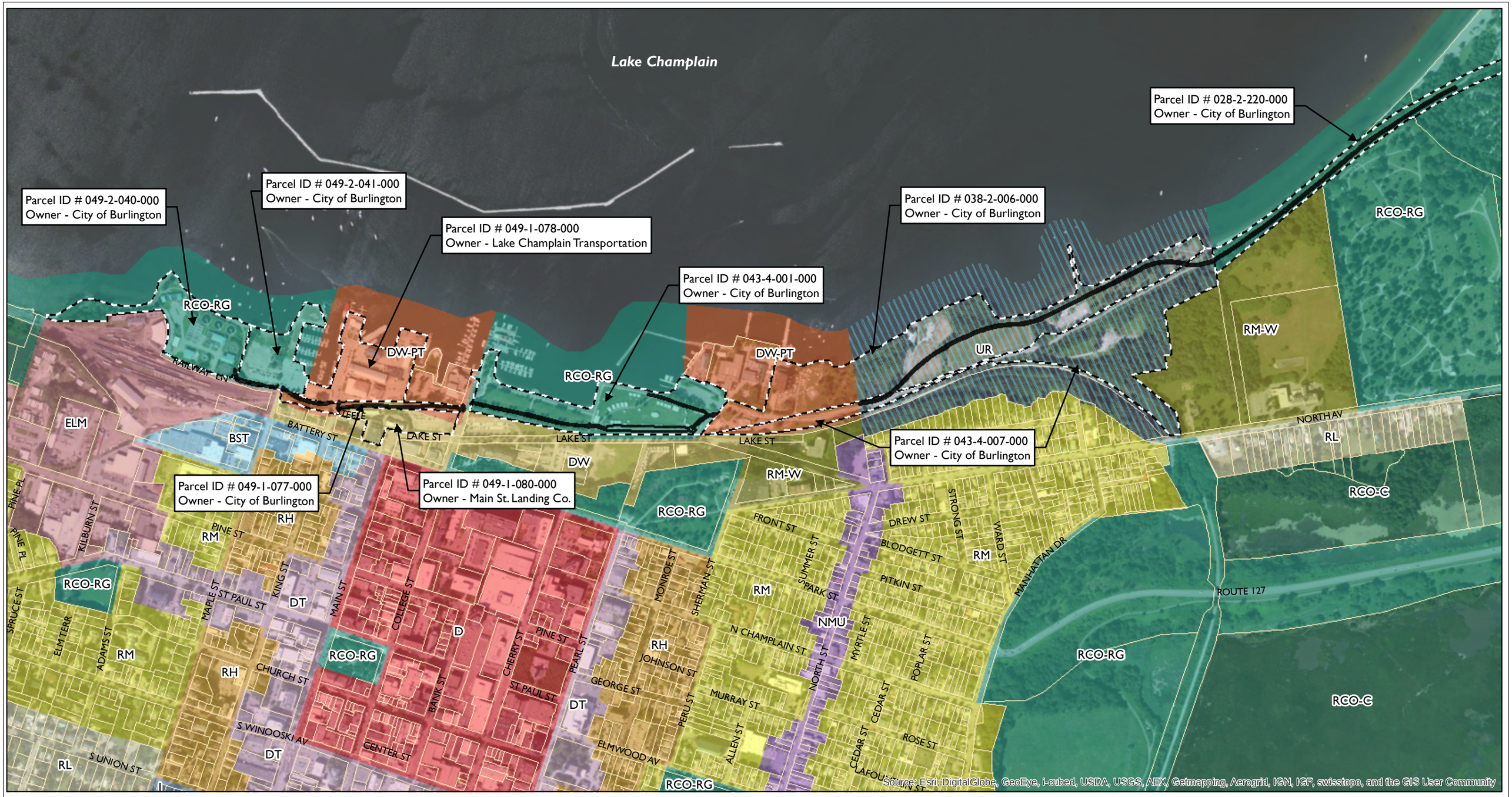

Source: Esri, DigitalGlobe, GeoEye, i-cubed, USDA, USGS, AEX, Getmapping, Aerogrid, IGN, IGP, swisstopo, and the GIS User Community

Proposed Phase One Construction Footprint
Parcels Intersected by Phase One of Construction
Parcel Boundary

Zoning - Base Districts

Mixed Use
- Downtown
- Downtown Transition
- Downtown Waterfront
- Downtown Waterfront - Public Trust
- Battery Street Transition
- Neighborhood Mixed Use
- Neighborhood Activity Center
- Neighborhood Activity Center - Riverside

Enterprise
- Enterprise - Agricultural Processing and Energy
- Enterprise - Light Manufacturing

Institutional
- Institutional

Residential
- Residential - High Density
- Residential - Medium Density
- Waterfront Residential - Medium Density
- Residential - Low Density
- Waterfront Residential - Low Density

Urban Reserve
- Urban Reserve

Recreation/ Conservation
- RCO - Agriculture
- RCO - Recreation/Greenspace
- RCO - Conservation

City of Burlington, VT
Bike Path Rehabilitation: Perkins Pier to North Beach
Zoning District Summary and Site Location Map

June 4, 2014

600 300 0 600 Feet

Sources: Background - ESRI Basemap (2012); Zoning base districts and parcel boundaries provided by the City of Burlington (2014); Roads data downloaded from VCGI (2013); Parcel Ownership from Burlington Grand List (2014)

VHB Vanasse Hangen Brustlin, Inc.

F:\57634.00\GIS\Project\11x17_Zoning_SiteLocation.mxd, Prepared by: jtherrien

RECEIVED
JUN 23 2014
DEPARTMENT OF
PLANNING & ZONING

Burlington Bike Path Rehabilitation
Summary of Lot Coverage for Burlington Zoning Permit Application
First Phase of Construction - Perkins Pier to North Beach, Plus Physical Improvements in Waterfront Park

Prepared by VHB
Revised June 23, 2014

Parcel ID	Size of Parcel (sq. ft.)	Owner*	Bike Path Segment	Zoning District	Public Right-of-Way?*	Size of Parcel within Zoning District (sq. ft.)**	Allowable Lot Coverage (%)	Approximate Existing Lot Coverage (sq. ft.)	Approximate Existing Lot Coverage (%)	Existing Lot Coverage Combined with Proposed Improvements (sq. ft)***	Proposed Lot Coverage including Bike Path Improvements (%)	Notes
028-2-220-000	817,802	State of Vermont (leased by City)	Texaco Beach to North Beach	RCO - Recreation/Greenspace	YES	381,149	N/A	N/A	N/A	N/A	N/A	Public Right-of-Way, not subject to Zoning Restrictions
038-2-006-000	905,768	City of Burlington	WAN (not applicable)	Downtown Waterfront - Public Trust	No	245,999	100%	--	--	--	--	--
			Urban Reserve	Urban Reserve	No	659,767	0%	6,818	1.0%	6,818	1.0%	Final plans to specify which existing surfaces will be removed to ensure no net increase in lot coverage.
043-4-001-000	465,785	City of Burlington	Waterfront Park	RCO - Recreation/Greenspace	No	389,102	25%	72,270	18.6%	74,610	19.2%	Below threshold.
043-4-007-000	648,455	City of Burlington	WAN (not applicable)	Downtown Waterfront - Public Trust	No	76,450	100%	--	--	--	--	--
			Urban Reserve	Urban Reserve	No	571,997	0%	74,991	13.1%	74,991	13.1%	Final plans to specify which existing surfaces will be removed to ensure no net increase in lot coverage.
049-1-077-000	59,417	State of Vermont (leased by City)	Perkins Pier to College St	Downtown Waterfront	YES	10,656	N/A	N/A	N/A	N/A	N/A	Public Right-of-Way, not subject to Zoning Restrictions
			Perkins Pier to College St	Downtown Waterfront - Public Trust	YES	48,762	N/A	33,721	N/A	N/A	N/A	Public Right-of-Way, not subject to Zoning Restrictions
049-1-078-000	258,424	Lake Champlain Transportation	Perkins Pier to College St	Downtown Waterfront - Public Trust	No	258,424	100%	241,513	93.5%	241,254	93.4%	Below threshold.
049-1-080-000	117,798	Main St. Landing Co.	Perkins Pier to College St	Downtown Waterfront - Public Trust	No	16,187	100%	16,103	99.5%	16,185	100.0%	At threshold.
049-2-040-000	311,047	City of Burlington	Perkins Pier to College St	RCO - Recreation/Greenspace	No	311,048	5%	154,372	49.6%	154,371	49.6%	Wastewater Treatment Plant
049-2-041-000	178,889	City of Burlington	Perkins Pier to College St	RCO - Recreation/Greenspace	TBD	178,726	70%	118,041	66.0%	118,035	66.0%	Below threshold.

Assumed public right of way
* Parcel ownership and public righ-of-way are currently being confirmed. Responses are subject to change.
** For Waterfront Park, the value provided is the area of park limits within the parcel boundaries.
*** For Waterfront Park, calculation of lot coverage excludes driveable grass per zoning amendment and includes lot coverage reduction attributable to removal of diagonal path in Event Grounds.
For the Urban Reserve, the City understands that, per Zoning Ordinance, there is to be no net increase in lot coverage. Values provided are subject to change.

City of Burlington – Department of Parks and Recreation
Waterfront Park Physical Improvements

RECEIVED
JUN 12 2014
DEPARTMENT OF
PLANNING & ZONING

Photographs of Existing Conditions

Photograph 1: View of backboards and electrical panels, College St. (VHB, 12/4/13)

Photograph 2: View of backboards and electrical panels, College St. (VHB, 12/4/13)

Photographs of Existing Conditions

Photograph 3: View of backboard and electrical panels, south center of Event Grounds. (VHB, 12/4/13) (VHB, 12/4/13)

Photograph 4: View of backboard and electrical panels, west side of Event Grounds at intersection of Bike Path and sidewalk. (VHB, 12/4/13)

RECEIVED
JUN 12 2014
DEPARTMENT OF
PLANNING & ZONING

Photographs of Existing Conditions

Photograph 5: View of backboard and electrical panels, west side of Event Grounds at intersection of Bike Path and sidewalk (VHB, 12/4/13)

Photograph 6: View of backboard and electrical panels, north end of Event Grounds (VHB, 12/4/13)

Photographs of Existing Conditions

Photograph 7: View boardwalk planks to be replaced, light fixture to be replaced
(VHB, 12/4/13)

UCM (LED) – Universe Medium Housing Scale

TYPE

- MicroCore™ & MicroEmitter technologies
- Surge protection included
- 0-10v dimming ready
- IP65 construction
- DLC QPL Listed
- Powder coat finish in 13 standard colors with a polymer primer sealer

RECEIVED
JUN 12 2014
DEPARTMENT OF PLANNING & ZONING

UCM (MicroCore)

1. LUMINAIRE	2. LUMINOUS HOOD	3. OPTICS	4. COLOR	5. HOOD OPTIONS	6. OPTIONS	7. MOUNTING
UCM						

1. LUMINAIRE

☐ UCM Universe medium

2. LUMINOUS /HOOD

NO LUMINOUS & HOOD

ANGLED	BELL	FLARED	STRAIGHT	SKIRTED
☐ ANG	☐ BEL	☐ FLR	☐ STR	☐ SKB

LUMINOUS & HOOD

4 LUMINOUS WINDOWS	SOLID RINGS	VERTICAL SLOTS	LUMINOUS RINGS
☐ WND-ANG	☐ SR-ANG	☐ VSL-ANG	☐ LUM-ANG
☐ WND-BEL	☐ SR-BEL	☐ VSL-BEL	☐ LUM-BEL
☐ WND-FLR	☐ SR-FLR	☐ VSL-FLR	☐ LUM-FLR
☐ WND-STR	☐ SR-STR	☐ VSL-STR	☐ LUM-STR
☐ WND-SKB	☐ SR-SKB	☐ VSL-SKB	☐ LUM-SKB

3. OPTICS

MICROCORE LED (*32 light emitting diode array, 75 watts. Class 2, 120 thru 277 volt. 3000K Warm White (3K), 4200K Neutral White (4K), 5100K Bright White (5K)*)

☐ T2-32LED-3K-700* *(Type 2)*	☐ T5-32LED-3K-700* *(Type 5)*
☐ T2-32LED-4K-700* *(Type 2)*	☐ T5-32LED-4K-700* *(Type 5)*
☐ T2-32LED-5K-700* *(Type 2)*	☐ T5-32LED-5K-700* *(Type 5)*
☐ T3-32LED-3K-700* *(Type 3)*	☐ TL-32LED-3K-700 *(45° left)*
☐ T3-32LED-4K-700* *(Type 3)*	☐ TL-32LED-4K-700 *(45° left)*
☐ T3-32LED-5K-700* *(Type 3)*	☐ TL-32LED-5K-700 *(45° left)*
☐ T4-32LED-3K-700* *(Type 4)*	☐ TR-32LED-3K-700 *(45° right)*
☐ T4-32LED-4K-700* *(Type 4)*	☐ TR-32LED-4K-700 *(45° right)*
☐ T4-32LED-5K-700* *(Type 4)*	☐ TR-32LED-5K-700 *(45° right)*

**** DesignLights Consortium® Qualified***

MICRO EMITTER LED (*60 light emitting diode array, 65 watts. Class 1, 120 thru 277 volt. 3000K Warm White (WW), 4200K Neutral White (NW), 5100K Bright White (BW). 350mA (drive current)*)

☐ T2-60LED-WW *(Type 2)*	☐ T4-60LED-WW *(Type 4)*
☐ T2-60LED-NW *(Type 2)*	☐ T4-60LED-NW *(Type 4)*
☐ T2-60LED-BW *(Type 2)*	☐ T4-60LED-BW *(Type 4)*
☐ T3-60LED-WW *(Type 3)*	☐ T5-60LED-WW *(Type 5)*
☐ T3-60LED-NW *(Type 3)*	☐ T5-60LED-NW *(Type 5)*
☐ T3-60LED-BW* *(Type 3)*	☐ T5-60LED-BW* *(Type 5)*

**** DesignLights Consortium® Qualified***

4. COLOR *(MicroCore only)*

☐ AWT *(Arctic White)*	☐ CRT *(Corten)*
☐ BLK *(Black)*	☐ MAL *(Matte Aluminum)*
☐ MTB *(Matte Black)*	☐ MDG *(Medium Grey)*
☐ DGN *(Dark Green)*	☐ ATG *(Antique Green)*
☐ DBZ *(Dark Bronze)*	☐ LGY *(Light Grey)*
☐ WRZ *(Wheathered Bronse)*	☐ RAL/PREMIUM COLOR *(Provide RAL)*
☐ BRM *(Metallic Bronze)*	☐ CUSTOM COLOR *(Provide color chip for matching)*
☐ VBL *(Verde Blue)*	

5. OPTIONS - HOOD *(The natural copper and stainless steel hoods are unfinished to develop a patina over time. All painted hoods have the underside of the hoods finished in high reflectance white.)*

☐ COP *(Copper)* ☐ STS *(Stainless steel)*

6. OPTIONS

- ☐ FTG *(Clear flat glass lens)*
- ☐ SAG *(Clear sag glass lens. MicroCore only)*
- ☐ HSS *(House side shield. MicroCore only)*
- ☐ RCK *(Rock guard painted black)*
- ☐ SLC *(Luminous element remains unlit during normal operation)*
- ☐ FLD *(Lightly diffused finish on flat glass lens)*
- ☐ WIH *(Integral HBA wiHUBB IFM transceiver and antenna. MicroCore only)*

7. MOUNTING – *Must choose one*

WALL MOUNT

☐ WMA4	☐ WMA5	☐ WMA6	☐ WMA8
☐ WMA9D	☐ WMA10	☐ WMA11	☐ WMA12
☐ WMA16	☐ WMA17	☐ WMA18	☐ WMA20
☐ WMA22D	☐ WMA24	☐ WMA37	☐ WMA38
☐ WMA39			

POLE MOUNT

☐ SLA2	☐ SLA3	☐ SLA4	☐ SLA4-2
☐ SLA7	☐ SLA7-2	☐ SLA7(5)	☐ SLA7(5)-2
☐ SLA8D	☐ SLA9	☐ SLA9-2	☐ SLA10
☐ SLA10-2	☐ SLA16	☐ SLA16-2	☐ SLA17
☐ SLA17-2	☐ SLA17(5)	☐ SLA17(5)-2	☐ SLA18
☐ SLA18-2	☐ SLA20	☐ SLA20-2	☐ SLA20A
☐ SLA20A-2	☐ SLA20B	☐ SLA20B-2	☐ SLA20C
☐ SLA20C-2	☐ SLA20D	☐ SLA20D-2	☐ SLA22D
☐ SLA24	☐ SLA24-2	☐ SLA24(5)	☐ SLA24(5)-2
☐ TRA4	☐ TRA7	☐ TRA7-2	☐ TRA8
☐ TRA8-2	☐ TRA9	☐ TRA9-2	

Visit www.aal.net for Arms, Poles & Accessories Specification Guide

SPECIFICATIONS

HOUSING

The driver compartment shall be one-piece die cast aluminum. The luminous rings shall be clear acrylic with an internal lens. The hood and spacers shall be heavy gauge spun aluminum with hemmed edges for added rigidity. All internal and external hardware shall be stainless steel. The bottom of the luminaire shall consist of die cast aluminum door frame and ring assembly. The hood ring assembly shall be fully sealed with a molded silicone gasket. The door frame shall be hinged to the ring and opened with two captive fasteners for service access.

OPTICAL

All optical systems shall provide IES Types II, III, IV, V, Custom, 45° Left & 45° Right distributions. Standard color temperatures shall be 3000K, 4200K and 5100K. See http://www.aal.net for comprehensive photometric data.

Luminaires featuring MicroCore light engines shall be composed of a distributed optical array of modules assembled together. Each module shall position the LEDs in a canted orientation allowing the diode's natural maximum output to begin at a high peak angle. An optically clear injection molded lens shall be coupled to every diode and LEDs shall be mounted to an anodized aluminum die-cast heat sink. A one piece injection molded silicone gasket shall seal each module for protection from the environment. An optional house side shield shall be integral to each module. Luminaires featuring MicroCore light engines are provided standard without a glass lens.

Luminaires configured with MicroEmitter shall feature precision injection molded, high specular reflectors positioned to achieve directional control towards the task. Secondary reflectors with a specular finish are used to redirect light downward. No fasteners are placed on the reflective surface. The entire assembly fastens to the housing as a one-piece module and features wiring quick-connects for easy installation. MicroEmitters shall be field replaceable. Luminaires configured with MicroEmitter shall be provided with a tempered glass lens sealed with an extruded silicone gasket held by stainless steel fasteners.

ELECTRICAL

All Luminaires shall accept 120 thru 277 volt input with integral surge protection. LifeShield™ shall be provided with all configurations for added protection in extreme temperature environments (-30°C to 60°C). The electrical assembly shall be mounted to a serviceable tray mounted within the driver compartment. The surge protector shall be U.L. recognized and have a surge current rating of 10,000

See next page

TYPE _____

JOB _____

NOTES _____

architectural area lighting

ARCHITECTURAL AREA LIGHTING
16555 East Gale Ave. | City of Industry | CA 91745
P 626.968.5666 | F 626.369.2695 | www.aal.net
Copyright © 2012 | REV 6.12

UCM (LED) – Universe Medium Housing Scale

TYPE

Amps using the industry standard 8/20uSec wave with a clamping voltage of 320V and surge rating of 372J. The surge protector case shall be a high-temperature, flame resistant plastic enclosure. Driver has a 0-10v dimming interface with a dimming range of 10-100%. Approved dimmers include Lutron Diva AVTV, Lutron Nova NFTV and NTFTV. (Note: not compatible with current sourcing dimmers). Consult factory for compatible dimming systems.

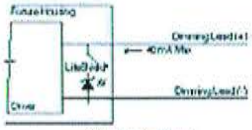

Fixture Equivalent Circuit

MOUNTING
The fixture shall be attached to the arm assembly with three stainless steel bolts. The connection shall be sealed with a silicone compression gasket.

FINISH
Fixture finish consists of a five stage pretreatment regimen with a polymer primer sealer, oven dry off, and top coated with a thermoset super TGIC polyester powder coat finish. The finish shall meet the AAMA 605.2 performance specification which includes passing a 3000 hour salt spray test for corrosion resistance.

CERTIFICATION
Listed with ETL for outdoor, wet location use. Conforms to UL1598 and Canadian CSA Std. C22.2 no.250 standard. Universe Luminaire housings shall be constructed to IP65 standards. MicroCore Optical arrays shall be constructed to IP66 standards.

WARRANTY
Housing, LEDs driver and LifeShield™ shall be warranted for five years. Any unauthorized return, repair, replacement or modification of the product(s) shall void this warranty. This warranty applies only to the use of the Product(s) as intended by AAL and does not cover poles, arms, mounting, or any misapplication or misuse of said Product(s), or installation in hazardous or corrosive environments. *Contact AAL for complete warranty language, exceptions, and limitations.

AAL reserves the right to change product specifications without notice.

WEIGHT & EPA

HOOD	LED		GLASS REFRACTOR		HORIZONTAL REFLECTOR		OPAL LENS	
No luminous	WT (lbs)	EPA	WT	EPA	WT (lbs)	EPA	WT (lbs)	EPA
ANG	28.55	.60	22.30	.59	28.55	.60	19.40	.62
BEL	32.00	.73	24.25	.71	32.00	.73	21.35	.73
FLR	28.85	.53	22.60	.54	28.85	.53	19.70	.57
STR	31.75	.59	24.00	.60	31.75	.59	21.10	.63
SKB	32.10	.90	24.35	.90	32.10	.90	21.45	.90
4 Lum Window								
WND-ANG	30.70	.72	24.45	.72	30.70	.72	21.55	.75
WND-BEL	34.15	.85	26.40	.83	34.15	.85	23.50	.86
WND-FLR	31.00	.65	24.75	.66	31.00	.65	21.85	.70
WND-STR	33.90	.71	26.15	.72	33.90	.71	23.25	.76
WND-SKB	34.25	1.03	26.50	1.03	34.25	1.03	23.60	1.03
Solid Rings								
SR-ANG	33.70	.74	27.45	.74	33.70	.74	30.00	.77
SR-BEL	37.15	.87	29.40	.85	37.15	.87	30.00	.88
SR-FLR	34.00	.67	27.75	.68	34.00	.67	30.00	.72
SR-STR	36.90	.73	29.15	.74	36.90	.73	30.00	.78
SR-SKB	37.25	1.05	29.50	1.05	37.25	1.05	34.00	1.05
Vertical Slots								
VSL-ANG	31.45	.72	25.20	.72	31.45	.72	30.00	.75
VSL-BEL	34.90	.85	27.15	.83	34.90	.85	30.00	.86
VSL-FLR	31.75	.65	25.50	.38	31.75	.65	30.00	.70
VSL-STR	34.65	.71	26.90	72	34.65	.71	30.00	.76
VSL-SKB	35.00	1.03	27.25	1.03	35.00	1.03	34.00	1.03
Lum Rings								
LUM-ANG	32.85	.74	26.60	.74	32.85	.74	30.00	.77
LUM-BEL	34.15	.85	28.55	.85	34.15	.85	30.00	.88
LUM-FLR	33.15	.67	24.75	.66	33.15	.67	30.00	.72
LUM-STR	36.05	.73	28.30	.74	36.05	.73	30.00	.78
LUM-SKB	36.40	1.05	28.65	1.05	36.40	1.05	34.00	1.05

DIMENSIONS

The first dimension is the height of fixtures with LEDs or horizontal reflectors. The second is for the opal lens and the third is the glass refractor fixture.

HOOD	NO LUMINOUS	4 LUMIOUS WINDOW (WIN)	SOLID RINGS (SR)	VERTICAL SLOTS (VSL)	LUMIOUS RINGS (LUM)
ANG DIA: 20"/508mm	14.7"/373mm 18"/457mm 16.7"/424mm	20.5"/520mm 22.2"/563mm 20.8"/528mm	20.7"/526mm 22.5"/572mm 21.1"/536mm	20.5"/521mm 22.2"/564mm 20.8"/528mm	20.6"/523mm 22.4"/569mm 21"/533mm
BEL DIA: 24"/610mm	15.8"/401mm 18"/457mm 16.7"/424mm	21.4"/543mm 22.2"/563mm 20.8"/528mm	21.6"/549mm 22.5"/572mm 21.1"/536mm	21.4"/543mm 22.2"/564mm 20.8"/528mm	21.5"/546mm 22.4"/569mm 21"/533mm
FLR DIA: 22"/559mm	14.5"/368mm 18.1"/435mm 16.8"/427mm	19.8"/503mm 22.3"/566mm 21"/533mm	20.1"/510mm 22.6"/574mm 21.2"/538mm	19.8"/503mm 22.3"/566mm 21"/533mm	20"/508mm 22.5"/574mm 21.1"/536mm
STR DIA: 24"/610mm	14"/355mm 18.1"/435mm 16.7"/424mm	19.8"/503mm 22.3"/566mm 20.9"/531mm	20"/508mm 22.5"/574mm 21.2"/538mm	19.8"/503mm 22.3"/566mm 20.9"/531mm	19.9"/505mm 22.5"/574mm 21.1"/536mm
SKB DIA: 24"/610mm	19.7"/500mm 19.7"/500mm 19.7"/500mm	23.9"/607mm 23.9"/607mm 23.9"/607mm	24.2"/615mm 24.2"/615mm 24.2"/615mm	23.9"/607mm 23.9"/607mm 23.9"/607mm	24.1"/612mm 24.1"/612mm 24.1"/612mm

UCM-T5-32LED-5K-700 WATTAGE: 74.9 LUMEN OUTPUT: 6,721 EFFICACY: 90.0 Lm/W

B3 U0 G1

FORWARD LIGHT			LUMEN
FL	30°	3.0%	198.9
FM	60°	24.5%	1,649.5
FH	80°	22.0%	1,476.8
FVH	90°	1.0%	70
BACK LIGHT			
BL	30°	2.9%	197.2
BM	60°	24.2%	1,629.5
BH	80°	21.4%	1,439.2
BVH	90°	1.0%	64
UPLIGHT			
UL	100°	0%	-
UH	180°	0%	-

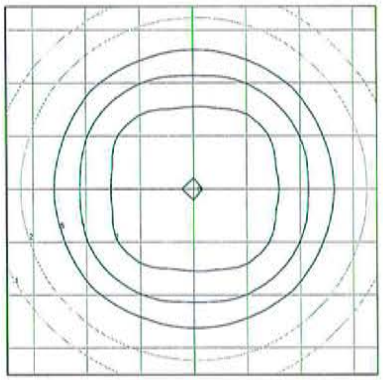

UPLIGHT 0%
DOWNLIGHT 100%

12' MOUNTING HEIGHT

UCM-T3-32LED-5K-700 WATTAGE: 74.9 LUMEN OUTPUT: 6619 EFFICACY: 88 Lm/W

B2 U0 G2

FORWARD LIGHT			LUMEN
FL	30°	3.6%	239.1
FM	60°	38.6%	2559.6
FH	80°	34.5%	2282.4
FVH	90°	1.2%	79.9
BACK LIGHT			
BL	30°	2.3%	150.7
BM	60°	10.9%	720.3
BH	80°	8.3%	550.7
BVH	90°	0.6%	40.0
UPLIGHT			
UL	100°	0%	0
UH	180°	0%	0

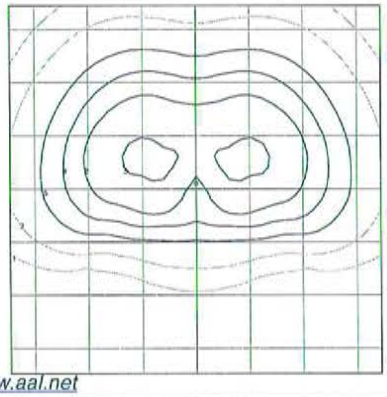

UPLIGHT 0%
DOWNLIGHT 100%

12' MOUNTING HEIGHT

IES files can be found at www.aal.net

ARCHITECTURAL AREA LIGHTING
16555 East Gale Ave. | City of Industry | CA 91745
P 626.968.5666 | F 626.369.2695 | www.aal.net
Copyright © 2012 | REV 6.12

DB6 – Decorative Pole

TYPE

RESET

4" ROUND (RD) & FLUTED (FL) DECORATIVE BASE

DB6

1. BASE	2. POLE	3. OAH	4. COLOR	5. OPTIONS/ACCESSORIES
DB3	4R10-125	10 (3.1m)		

MAXIMUM ALLOWABLE EPA (MPH)

1. BASE	2. POLE	3. OAH	SHAFT	WT	85	90	100	110	120	130	140	150
☐ DB6	4R10-125	10' (3.1m)	4" RD x .125"	50	19.4	17.1	13.5	10.8	8.9	7.4	6.3	5.5
☐ DB6	4R12-125	12' (3.7m)	4" RD x .125"	54	15.3	13.4	10.5	8.3	6.7	5.6	4.7	4.0
☐ DB6	4R14-125	14' (4.3m)	4" RD x .125"	57	12.3	10.7	8.2	6.3	5.0	4.1	3.4	2.9
☐ DB6	4R16-125	16' (4.9m)	4" RD x .125"	61	10.0	8.6	6.4	4.8	3.6	2.9	2.4	2.0
☐ DB6	4F10-188	10' (3.1m)	4" FL x .188"	56	22.1	19.5	15.4	12.4	10.2	8.5	7.1	6.1
☐ DB6	4F12-188	12' (3.7m)	4" FL x .188"	62	17.6	15.4	12.1	9.6	7.7	6.4	5.3	4.4
☐ DB6	4F14-188	14' (4.3m)	4" FL x .188"	67	14.3	12.5	9.6	7.5	5.9	4.8	3.9	3.2
☐ DB6	4F16-188	16' (4.9m)	4" FL x .188"	72	11.7	10.1	7.6	5.8	4.4	3.5	2.7	2.2
☐ DB6	4R10-226	10' (3.1m)	4" RD x .226"	60	23.8	21.0	16.7	13.5	11.1	9.3	8.0	6.9
☐ DB6	4R12-226	12' (3.7m)	4" RD x .226"	66	19.2	16.9	13.3	10.6	8.6	7.2	6.1	5.3
☐ DB6	4R14-226	14' (4.3m)	4" RD x .226"	73	15.9	13.9	10.8	8.4	6.8	5.6	4.7	4.0
☐ DB6	4R16-226	16' (4.9m)	4" RD x .226"	79	12.4	12.3	9.4	7.3	5.7	4.7	4.0	3.3

Note: Overall height is measured to top of pole.

4. COLOR

- ☐ AWT *(Arctic White)*
- ☐ BLK *(Black)*
- ☐ MTB *(Matte Black)*
- ☐ DGN *(Dark Green)*
- ☐ DBZ *(Dark Bronze)*
- ☐ WRZ *(Wheathered Bronse)*
- ☐ BRM *(Metallic Bronze)*
- ☐ VBL *(Verde Blue)*
- ☐ CRT *(Corten)*
- ☐ MAL *(Matte Aluminum)*
- ☐ MDG *(Medium Grey)*
- ☐ ATG *(Antique Green)*
- ☐ LGY *(Light Grey)*
- ☐ RAL/PREMIUM COLOR *(Provide RAL)*
- ☐ CUSTOM COLOR *(Provide color chip for matching)*

5. OPTIONS / ACCESSORIES

- ☐ FH *(Flag holder. Specify location on pole)*
- ☐ FS1 *(Single weatherproof fuse holder. Fuse by others.)*
- ☐ FS2 *(Double weatherproof fuse holder. Fuse by others.)*
- ☐ LR *(Ladder rest. Slips over a 4" O.D. pole.)*
- ☐ PCA-T *(Rotatable photocell housing. The housing slips over a 4"/100mm O.D. pole. A fixture slips over the 4"/100mm O.D. tenon. Includes an internal twist lock receptacle, and an access cover with integral lens and stainless steel tether. Adds 5"/125mm to the overall height of the pole/fixture assembly. Prewired on the load side and line side for easy installation. Photocell by others.)*
- ☐ PCR *(Low profile twist lock photocell receptacle with cast pole cap top. Secures to the top of the pole with three stainless steel set screws. Photocell by others.)*
- ☐ PLT *(Plant Hanger. For 4" O.D. poles. (specify location on pole)*
- ☐ RBC *(Cast aluminum receptacle housing, integrally welded to the pole. Includes a NEC approved clear weatherproof cover. Does not include a receptacle or internal wiring.)*

SPECIFICATIONS

Base shall be cast aluminum #356 alloy, free of any porosity, foreign materials, or cosmetic fillers. Base casting shall be heat treated to a T-6 condition, and of uniform wall thickness, with no warping or mold shifting.

WARNINGS

Caution must be exercised in the selection of a design wind speed when the pole is to be installed in a special wind region (as indicated by the wind map) or in an area where wind speed is unpredictable.

AAL recommends consulting a local engineer when the pole is to be installed in an area that may be subject to extreme weather and exposure

Poles installed on structures such as buildings and bridges may be subjected to vibration, oscillations, and other fatigue effects which are not covered by the AAL warranty.

The use of banners or other appendages can severely affect the loading of a pole. No banner or other appendage should be attached to an AAL pole unless approved by AAL.

If the products are to be used on an existing foundation or on other structures, the customer assumes all responsibility for the structural integrity of the existing foundation, anchorage or structures and all the consequences arising therefrom.

CAUTION

Poles should never be erected without the luminaire installed. Warranty is voided if the pole is erected without the luminaire. The warranty is voided if the pole is not grouted under the entire base after installation.

Anchor bolts shall be hot dip galvanized steel. Eight galvanized hex nuts and flat washers, and a bolt circle template shall be provided. Anchor bolt for poles are 3/4" x 24" x 3".

| CLEAR |

JOB _____

TYPE _____

NOTES _____

ARCHITECTURAL AREA LIGHTING
16555 East Gale Ave. | City of Industry | CA 91745
P 626.968.5666 | F 626.369.2695 | www.aal.net
Copyright © 2012 | REV 6.12

DB6 – Decorative Pole

TYPE

4" ROUND (RD) & FLUTED (FL) DECORATIVE BASE

DIMENSIONS

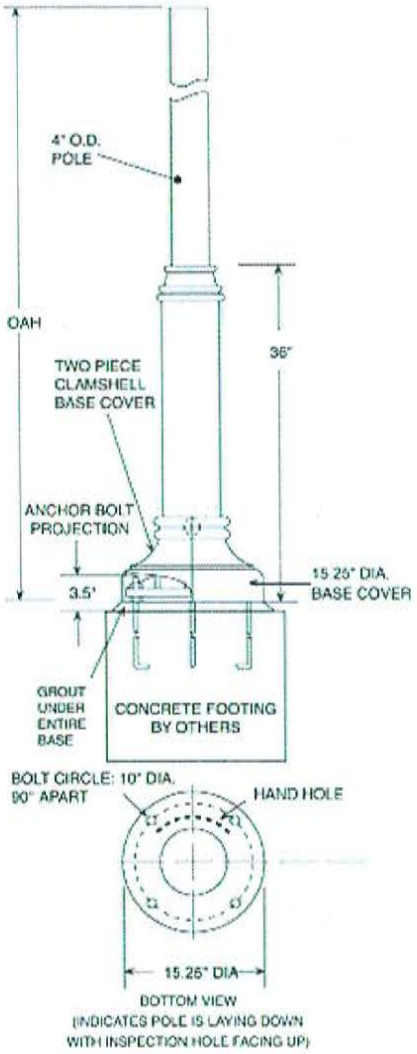

Copyright © 2012 | REV 6.12

SLA17/SLA17(5)/SLA17-2/SLA17(5)-2 – Contemporary Arms | TYPE

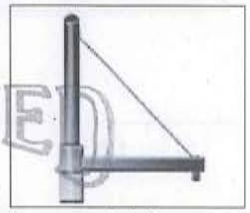

SLA17

RECEIVED
JUN 12 2014
DEPARTMENT OF PLANNING

1. ARM | 2. COLOR

1. ARM

- ☐ SLA17 *(Slips over 4" pole. Weight: 18 lbs. EPA: 1.50)*
- ☐ SLA17(5) *(Slips over 5" pole. Weight: 24 lbs. EPA: 2.20)*
- ☐ SLA17-2 *(Twin arms, slips over 4" pole. Weight: 24 lbs. EPA: 2.05)*
- ☐ SLA17(5)-2 *(Twin arms, slips over 5" pole . Weight: 33 lbs. EPA: 2.09)*

2. COLOR

- ☐ AWT *(Arctic White)*
- ☐ BLK *(Black)*
- ☐ MTB *(Matte Black)*
- ☐ DGN *(Dark Green)*
- ☐ DBZ *(Dark Bronze)*
- ☐ WRZ *(Wheathered Bronse)*
- ☐ BRM *(Metallic Bronze)*
- ☐ VBL *(Verde Blue)*
- ☐ CRT *(Corten)*
- ☐ MAL *(Matte Aluminum)*
- ☐ MDG *(Medium Grey)*
- ☐ ATG *(Antique Green)*
- ☐ LGY *(Light Grey)*
- ☐ RAL/PREMIUM COLOR *(Provide RAL)*
- ☐ CUSTOM COLOR *(Provide color chip for matching)*

DIMENSIONS

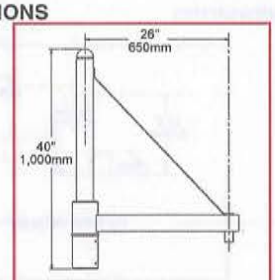

SLA17 *(4" pole)*

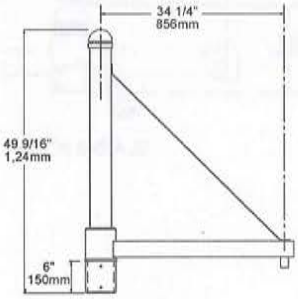

SLA17(5) *(5" pole)*

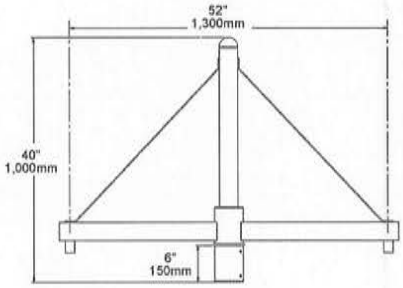

SLA17-2 *(4" pole)*

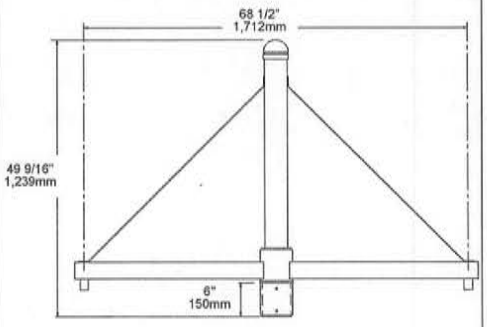

SLA17(5)-2 *(5" pole)*

SPECIFICATIONS

The arm shall be of one piece unitized aluminum construction, fully welded and assembled. The slip fitter shall be cast aluminum with an internal wireway and pole stop. The arm shall be prewired with a quick connector for easy installation.

The arm shall have a cast aluminum fitter welded to the top of the arm(s) for attaching the fixture. The fixture shall be mounted with three stainless steel bolts through the top of the arm fitter into the fixture. The attachment point shall have a silicone pad for sealing the fixture to arm connection.

The arm shall slip over a 4"/100mm or 5"/125mm diameter pole or tenon. The cast aluminum slip fitter shall have six stainless steel cup point set screws for securing the arm to the pole or tenon.

JOB _____

TYPE _____

NOTES _____

architectural area lighting
ARCHITECTURAL AREA LIGHTING
16555 East Gale Ave. | City of Industry | CA 91745
P 626.968.5666 | F 626.369.2695 | www.aal.net
Copyright © 2012 | REV 6.12

SLA20/SLA20-2 – Contemporary Arms

TYPE

1. ARM	2. COLOR

SLA20

1. ARM

- ☐ SLA20 *(Slips over 4" pole. Weight: 10 lbs. EPA: .70)*
- ☐ SLA20-2 *(Twin arms, slips over 4" pole. Weight: 18 lbs. EPA: 1.25)*

2. COLOR

- ☐ AWT *(Arctic White)*
- ☐ BLK *(Black)*
- ☐ MTB *(Matte Black)*
- ☐ DGN *(Dark Green)*
- ☐ DBZ *(Dark Bronze)*
- ☐ WRZ *(Wheathered Bronse)*
- ☐ BRM *(Metallic Bronze)*
- ☐ VBL *(Verde Blue)*
- ☐ CRT *(Corten)*
- ☐ MAL *(Matte Aluminum)*
- ☐ MDG *(Medium Grey)*
- ☐ ATG *(Antique Green)*
- ☐ LGY *(Light Grey)*
- ☐ RAL/PREMIUM COLOR *(Provide RAL)*
- ☐ CUSTOM COLOR *(Provide color chip for matching)*

DIMENSIONS

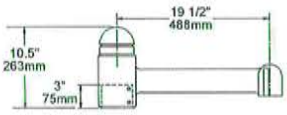

SLA20 *(4" pole)*

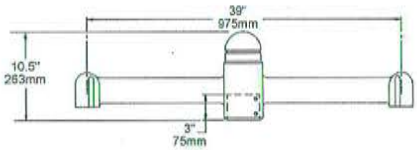

SLA20-2 *(4" pole)*

SPECIFICATIONS

The arm shall be of one piece unitized aluminum construction, fully welded and assembled. The slip fitter shall be cast aluminum with an internal wireway and pole stop. The arm shall be prewired with a quick connector for easy installation.

The arm shall have a cast aluminum fitter welded to the top of the arm(s) for attaching the fixture. The fixture shall be mounted with three stainless steel bolts through the top of the arm fitter into the fixture. The attachment point shall have a silicone pad for sealing the fixture to arm connection.

The arm shall slip over a 4"/100mm diameter pole or tenon. The cast aluminum slip fitter shall have six stainless steel cup point set screws for securing the arm to the pole or tenon.

JOB _____

TYPE _____

NOTES _____

ARCHITECTURAL AREA LIGHTING
16555 East Gale Ave. | City of Industry | CA 91745
P 626.968.5666 | F 626.369.2695 | www.aal.net
Copyright © 2012 | REV 6.12

RECEIVED
JUN 12 2014
DEPARTMENT OF
PLANNING & ZONING

MORANO

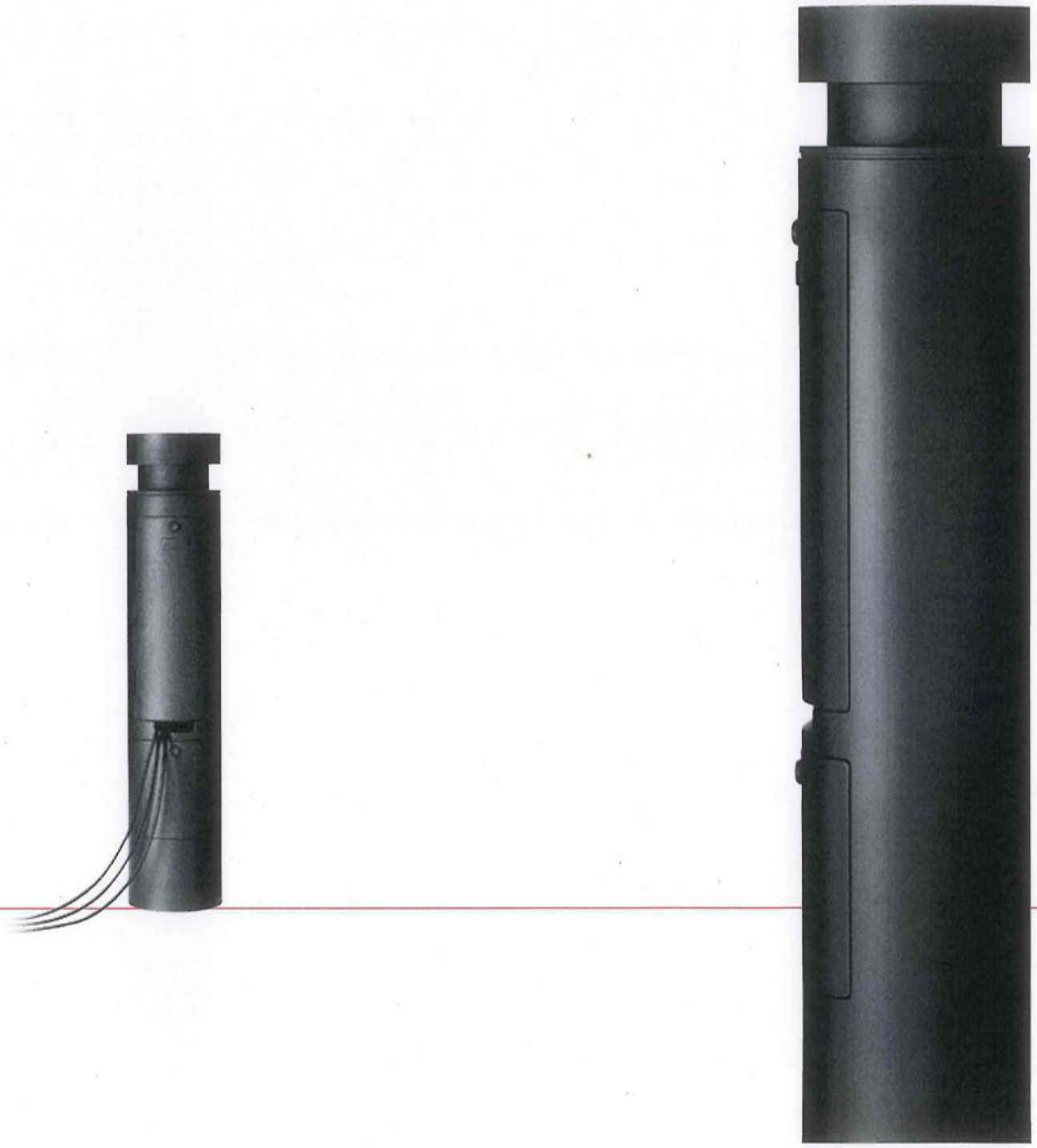

RECEIVED
JUN 12 2014
DEPARTMENT OF
PLANNING & ZONING

MORANO

www.hessamerica.com/7510

M O R A N O . Utility Bollard

The MORANO utility bollard delivers an architectural alternative for locating electrical or water supply points in exterior landscapes. The simple top detail is machined from billet aluminum and fastened to the hot-dip galvanized shaft with concealed hardware to provide a one-piece appearance. Access doors are flush to the bollard shaft and secured with lock and key to ensure safety and prevent unauthorized entry. Power bollard features an integral chute for cables to allow closed door operation while in use. Electrical chassis is provided for installation of electrical components. Electrical design, components, and installation are by others per applicable codes. Water bollard is designed for open door operation. Plumbing and fittings are supplied by others. Bollard mounts to factory supplied galvanized steel soil insert embedded in concrete foundation, by others. Companion barrier bollard completes the product family. Standard colors; matte silver grey metallic, dark grey, graphite grey, or black. Special colors available. All hardware is stainless steel.

Model	Height	Type
MOR1215-GS-PB	47.8"	Power Bollard – Closed Door Operation
MOR1215-OF-WB	47.8"	Water Bollard – Open Door Operation

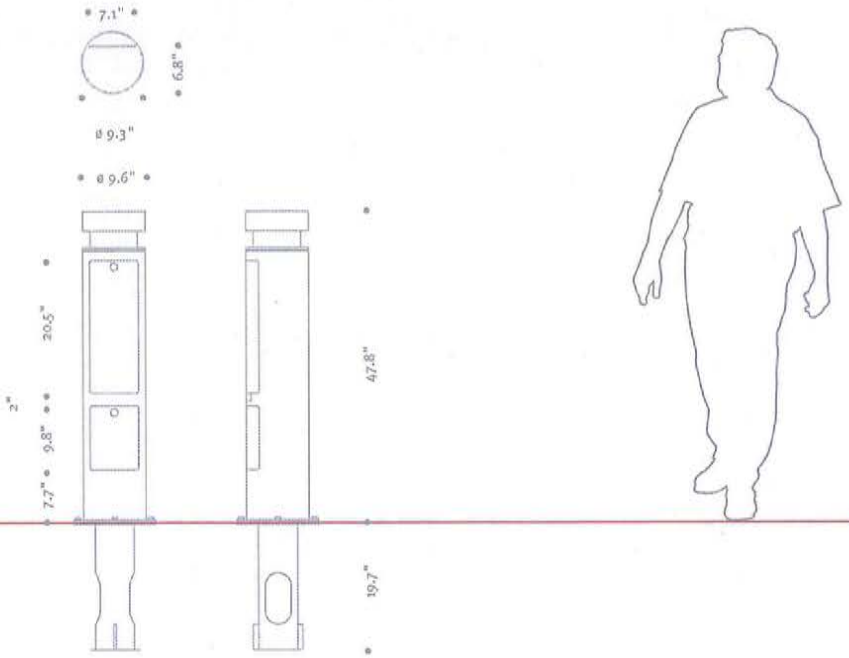

Phone: 864.487.3535 • Fax: 864.487.3175 • www.hessamerica.com
P.O. Box 28 • Gaffney, SC 29342-0028

.hess

MORANO 1215 GS PB

Specification

RECEIVED
JUN 12 2014
DEPARTMENT OF
PLANNING & ZONING

The MORANO utility bollard delivers an architectural alternative for locating electrical or water supply points in exterior landscapes. The simple top detail is machined from billet aluminum and fastened to the hot-dip galvanized shaft with concealed hardware to provide a one-piece appearance. Access doors are flush to the bollard shaft and secured with lock and key to ensure safety and prevent unauthorized entry. Power bollard features an integral chute for cables to allow closed door operation while in use. Electrical chassis is provided for installation of electrical components. Electrical design, components, and installation are by others per applicable codes. Water bollard is designed for open door operation. Plumbing and fittings are supplied by others. Bollard mounts to factory supplied galvanized steel soil insert embedded in concrete foundation, by others. Companion barrier bollard completes the product family. Standard colors; matte silver grey metallic, dark grey, graphite grey, or black. Special colors available. All hardware is stainless steel.

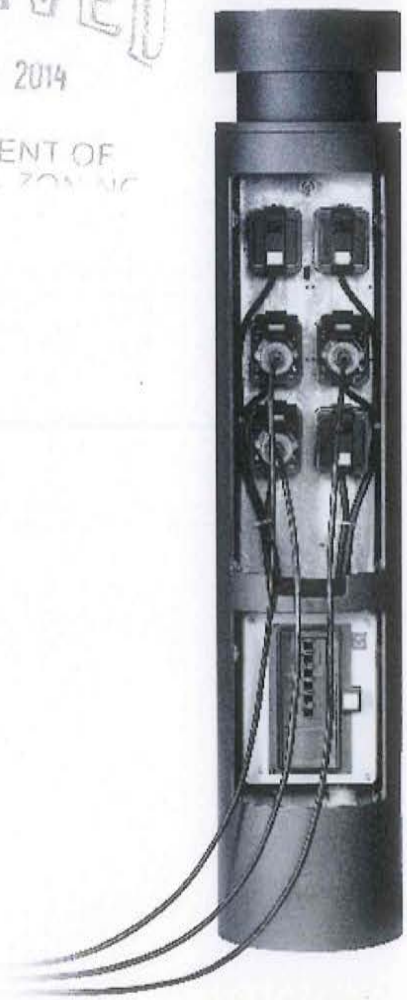

Model
MOR1215-GS-PB
Ordering Information
MOR1215

Specifications are subject to change without notification

.hess

MORANO 1215 OF WB

Specification

RECEIVED
JUN 12 2014
DEPARTMENT OF
PLANNING & ZONING

The MORANO utility bollard delivers an architectural alternative for locating electrical or water supply points in exterior landscapes. The simple top detail is machined from billet aluminum and fastened to the hot-dip galvanized shaft with concealed hardware to provide a one-piece appearance. Access doors are flush to the bollard shaft and secured with lock and key to ensure safety and prevent unauthorized entry. Power bollard features an integral chute for cables to allow closed door operation while in use. Electrical chassis is provided for installation of electrical components. Electrical design, components, and installation are by others per applicable codes. Water bollard is designed for open door operation. Plumbing and fittings are supplied by others. Bollard mounts to factory supplied galvanized steel soil insert embedded in concrete foundation, by others. Companion barrier bollard completes the product family. Standard colors; matte silver grey metallic, dark grey, graphite grey, or black. Special colors available. All hardware is stainless steel.

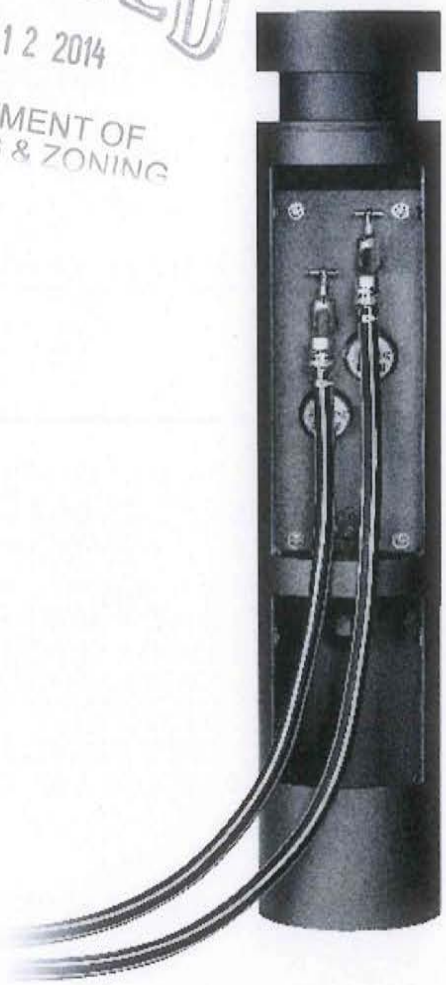

Model
MOR1215-OF-WB
Ordering Information
MOR1215

Specifications are subject to change without notification

1:125

0 10 50 100

WATERFRONT PARK UPGRADES
Site Plan

December 16, 2013

RECEIVED
JUN 12 2014
DEPARTMENT OF
PLANNING & ZONING

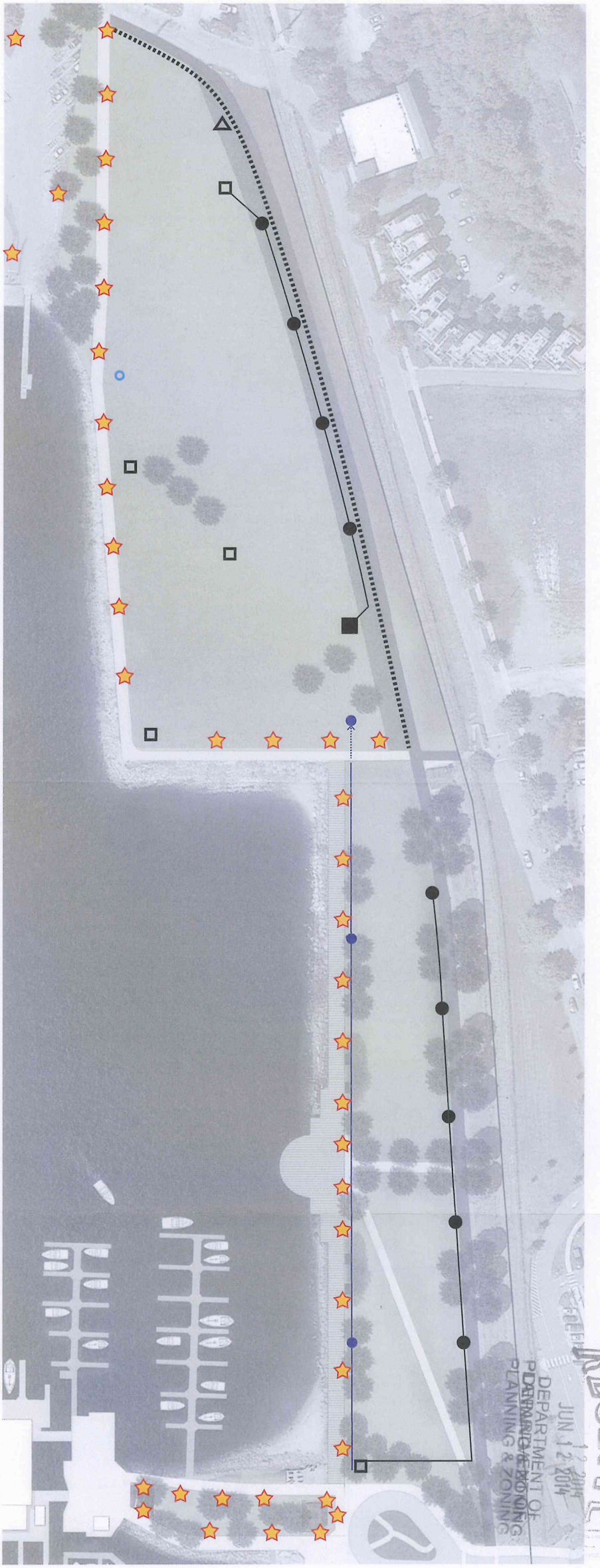

RECEIVED
JUN 12 2014
DEPARTMENT OF
PLANNING & ZONING

- EXISTING WATER SPIGOT
- EXISTING TRANSFORMER TO REMAIN
- EXISTING POWER CABINET OR PANEL
- NEW POWER CABINET OR PANEL
- NEW POWER BOLLARD
- UPGRADE EXISTING LIGHT
- NEW 2" WATER SERVICE
- EXISTING 2" WATER SERVICE
- NEW WATER BOLLARD
- TEMPORARY FENCING FOR EVENTS

1:100

0 10 50 100

N

WATERFRONT PARK UPGRADES
Utility Plan

December 16, 2013

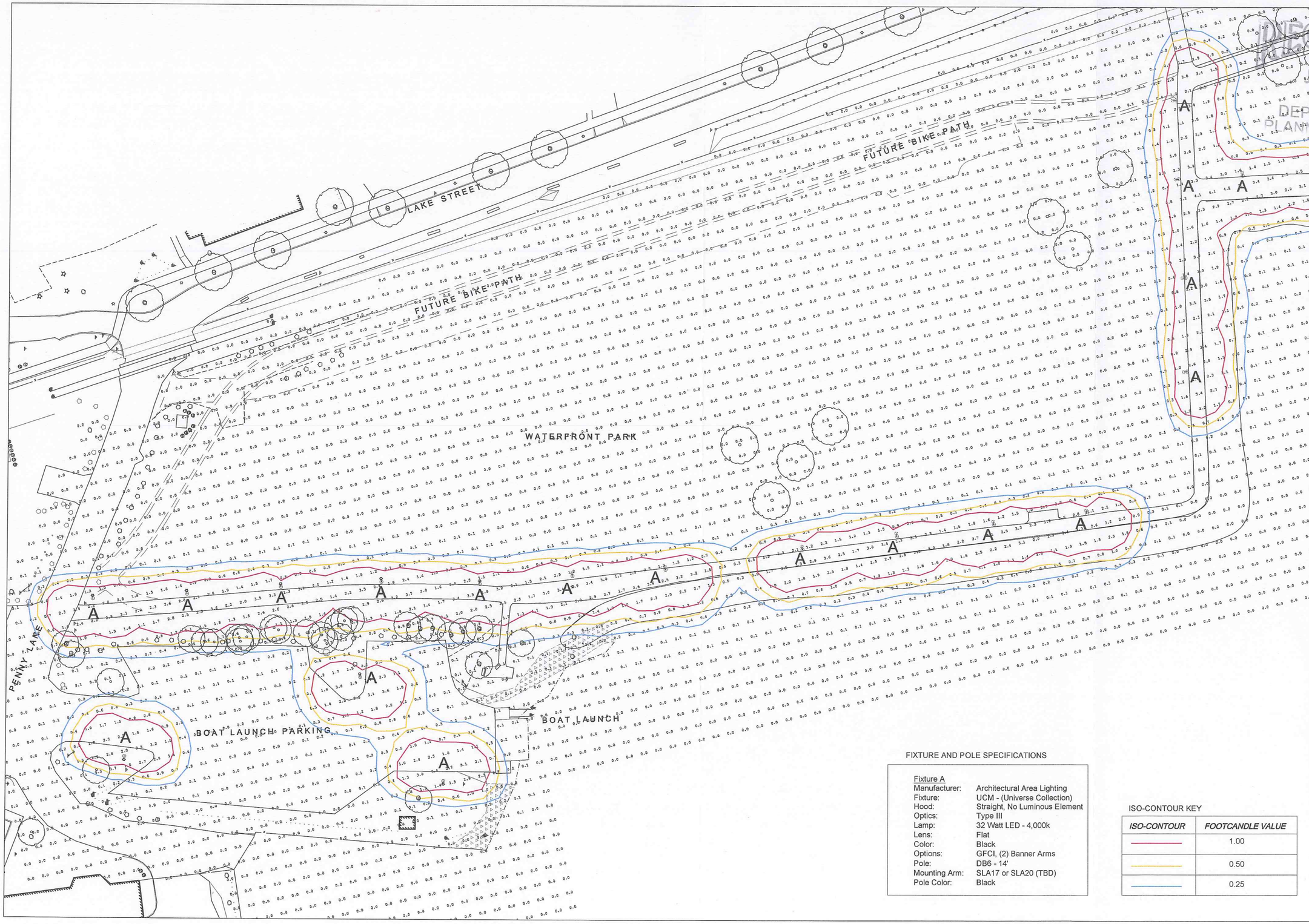

FIXTURE AND POLE SPECIFICATIONS

Fixture A	
Manufacturer:	Architectural Area Lighting
Fixture:	UCM - (Universe Collection)
Hood:	Straight, No Luminous Element
Optics:	Type III
Lamp:	32 Watt LED - 4,000k
Lens:	Flat
Color:	Black
Options:	GFCI, (2) Banner Arms
Pole:	DB6 - 14'
Mounting Arm:	SLA17 or SLA20 (TBD)
Pole Color:	Black

ISO-CONTOUR KEY

ISO-CONTOUR	*FOOTCANDLE VALUE*
	1.00
	0.50
	0.25

RECEIVED
JUN 12 2014
DEPARTMENT OF
PLANNING & ZONING

WATERFRONT PARK EVENT AND IMPROVEMENTS AMENDMENT
Burlington, Vermont

SE GROUP
131 Church Street
Burlington, VT 05401
Tel: 802.862.0098
Fax: 802.865.2440
www.segroup.com

0 15' 30' 60'
Graphic Scale: 1"=30'

North

Scale: 1"=30'
Date: 12/12/2013
Drawn By: mkw
Checked By: mkw

Revisions:

Rev.	Description	Date	By

Title

LIGHTING PLAN

Sheet Number:

L1.0

Project Number:
File:

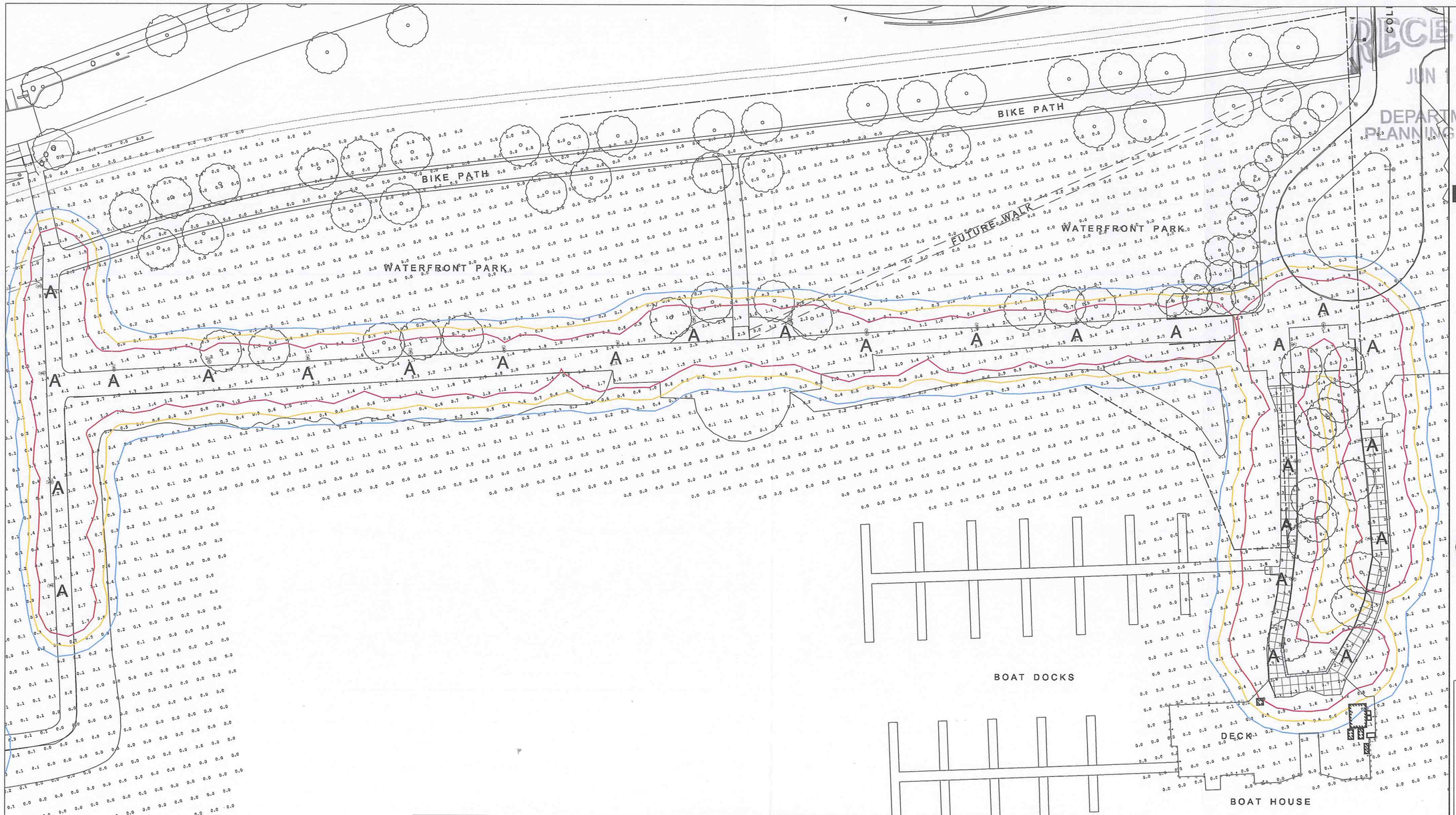

RECEIVED
JUN 1
DEPARTMENT OF
PLANNING & ZONING

WATERFRONT PARK EVENT
AND IMPROVEMENTS
AMENDMENT
Burlington, Vermont

SE GROUP
131 CHURCH STREET
BURLINGTON, VT 05401
TEL: 802.862.0098
FAX: 802.865.2440
WWW.SEGROUP.COM

0 15' 30' 60'
Graphic Scale: 1"=30'

North

Scale: 1"=30'
Date: 12/12/2013
Drawn By: mkw
Checked By: mkw

Revisions:

Rev.	Description	Date	By

Title

LIGHTING PLAN

Sheet Number:

L1.1

Project Number:
File:

FIXTURE AND POLE SPECIFICATIONS

Fixture A

Manufacturer:	Architectural Area Lighting
Fixture:	UCM - (Universe Collection)
Hood:	Straight, No Luminous Element
Optics:	Type III
Lamp:	32 Watt LED - 4,000k
Lens:	Flat
Color:	Black
Options:	GFCI, (2) Banner Arms
Pole:	DB6 - 14'
Mounting Arm:	SLA17 or SLA20 (TBD)
Pole Color:	Black

ISO-CONTOUR KEY

ISO-CONTOUR	*FOOTCANDLE VALUE*
	1.00
	0.50
	0.25