GENERAL CONSTRUCTION NOTES

1. ALL WORK AND MATERIALS SHALL BE IN ACCORDANCE WITH THE LATEST VERMONT AGENCY OF TRANSPORTATION STANDARD SPECIFICATIONS FOR CONSTRUCTION 2006, THE MANUAL ON UNIFORM TRAFFIC CONTROL DEVICES(2003 EDITION), THE BURLINGTON ZONING ORDINANCE REQUIREMENTS AND THESE PLANS.

2. THE CONTRACTOR SHALL CONTACT ALL UTILITIES BEFORE EXCAVATION TO VERIFY THE LOCATION OF ANY UNDERGROUND LINES. THE CONTRACTOR SHALL NOTIFY "DIGSAFE" AT 1-888-344-7233 (1-888-DIG-SAFE) & THE CITY OF BURLINGTON AT (802)865-5830 PRIOR TO ANY EXCAVATION.

3. UTILITIES INFORMATION SHOWN HEREON WERE OBTAINED FROM BEST AVAILABLE SOURCES AND MAY OR MAY NOT BE EITHER ACCURATE OR COMPLETE. THE CONTRACTOR SHALL VERIFY THE EXACT LOCATION OF EXISTING UTILITIES AND SHALL BE RESPONSIBLE FOR ANY DAMAGE TO ANY UTILITY, PUBLIC OR PRIVATE, SHOWN OR NOT SHOWN HEREON. THE CONTRACTOR SHALL CONNECT OR RECONNECT ALL UTILITIES TO THE NEAREST SOURCE THROUGH COORDINATION WITH UTILITY OWNER.

4. THE CONTRACTOR SHALL BE RESPONSIBLE FOR DEMOLITION AND REMOVAL OF ALL EXISTING SURFACES, SOILS, VEGETATION, PAVEMENT AND STRUCTURES NECESSARY TO CONSTRUCT THIS PROJECT UNLESS OTHERWISE NOTED ON THESE PLANS. THE CONTRACTOR SHALL REMOVE ALL EXCESS MATERIAL, DEBRIS AND TRASH FROM THE SITE UPON COMPLETION OF CONSTRUCTION, UNLESS OTHERWISE DIRECTED BY THE ENGINEER.

5. THE CONTRACTOR SHALL BE RESPONSIBLE FOR ENSURING THAT THE DUST CREATED AS A RESULT OF CONSTRUCTION DOES NOT CREATE A NUISANCE OR A SAFETY HAZARD. WHERE AND WHEN DEEMED NECESSARY BY THE ENGINEER OR OWNER, THE CONTRACTOR SHALL BE REQUIRED TO WET SECTIONS OF THE CONSTRUCTION AREA WITH WATER, APPLY CALCIUM CHLORIDE OR SWEEP ASPHALT ROADS WITH A POWER BROOM AS DUST CONTROL.

6. ANY SURFACES, LINES, OR STRUCTURES WHICH HAVE BEEN DAMAGED BY THE CONTRACTOR'S OPERATIONS SHALL BE RESTORED TO THE CONDITION AT LEAST EQUAL TO THAT IN WHICH THEY WERE FOUND IMMEDIATELY PRIOR TO THE BEGINNING OF OPERATIONS.

7. CONSTRUCTION OBSERVATION AND CERTIFICATION IS OFTEN REQUIRED AS A CONDITION OF STATE AND LOCAL PERMITS. IT IS RECOMMENDED THAT CONSTRUCTION OF THE IMPROVEMENTS DETAILED ON THESE PLANS BE OBSERVED BY LAMOUREUX & DICKINSON CONSULTING ENGINEERS INC. (L&D) TO DETERMINE IF THE WORK IS BEING PERFORMED IN ACCORDANCE WITH THE APPROVED PLANS AND SPECIFICATIONS. L&D WAIVES ANY AND ALL RESPONSIBILITY AND LIABILITY FOR PROBLEMS THAT MAY ARISE FROM: FAILURE TO FOLLOW THESE PLANS AND SPECIFICATIONS AND THE DESIGN INTENT THAT THEY CONVEY, ANY CHANGES MADE IN THE PLANS AND SPECIFICATIONS OR IN THE CONSTRUCTION OF THE PROPOSED IMPROVEMENTS WITHOUT L&D's PRIOR KNOWLEDGE AND CONSENT, AND/OR FAILURE TO SCHEDULE OBSERVATION OF THE WORK AND TESTING IN PROGRESS.

8. FOR ANY WORK WITHIN THE PUBLIC RIGHT-OF-WAY A MINIMUM OF ONE-WAY TRAFFIC SHALL BE MAINTAINED AT ALL TIMES. CONTINUOUS TWO-WAY TRAFFIC WILL BE REQUIRED AT NIGHT, DURING PEAK-HOURS, AND WHENEVER POSSIBLE DURING ACTUAL CONSTRUCTION ACTIVITIES. TEMPORARY CONSTRUCTION SIGNS AND TRAFFIC CONTROL SIGNS SHALL BE ERECTED BY THE CONTRACTOR IN ACCORDANCE WITH STATE AND CITY STANDARDS.

9. TO ASSURE COMPLIANCE WITH THE PLAN(S), THE CONTRACTOR SHALL NOTIFY THE ENGINEER 24 HOURS IN ADVANCE OF STARTING ANY WORK, BEGINNING INSTALLATION OF ANY UTILITIES, BRINGING IN ANY NEW GRAVEL FOR THE NEW PAVED AREAS, PAVING, AND FINAL INSPECTION.

10. TOPSOIL SHALL BE STOCKPILED, SEEDED, AND MULCHED UNTIL REUSED. SILT FENCE SHALL BE PLACED AND STAKED CONTINUOUSLY AROUND THE DOWNSLOPE PERIMETER OF THE TOPSOIL PILES.

11. HEALTHY EXISTING TREES AS SHOWN ON THE SITE PLAN TO BE SAVED SHALL BE PROTECTED BY THE CONTRACTOR.

12. OPEN CUT AREAS SHALL BE MULCHED OUTSIDE OF ACTUAL WORK AREAS, AND SILT FENCE SHALL BE EMPLOYED TO CONFINE SHEET WASH AND RUNOFF TO THE IMMEDIATE OPEN AREA AS ORDERED BY THE ENGINEER.

13. AT COMPLETION OF GRADING, SLOPES, DITCHES, AND ALL DISTURBED AREAS SHALL BE SMOOTH AND FREE OF POCKETS WITH SUFFICIENT SLOPE TO ENSURE DRAINAGE.

14. ALL FILL SHALL BE PLACED IN 6 INCH LIFTS AND THOROUGHLY COMPACTED TO 95% OF MAXIMUM DENSITY AT OPTIMUM MOISTURE CONTENT AS DETERMINED BY ASTM D698 STANDARD PROCTOR, UNLESS OTHERWISE SPECIFIED.

SANITARY & STORM SPECIFICATIONS

1) SANITARY AND STORM SEWER PIPES SHALL BE OF THE SIZE AND TYPE INDICATED ON THE PLANS. PVC PIPE SHALL BE SDR 35 CONFORMING TO ASTM D-3034, ASTM D-3212, AND ASTM F-477. CORRUGATED METAL PIPE SHALL CONFORM TO AASHTO M-190 FOR ACCGMP PIPE AND AASHTO M-246 TYPE BFOR POLYMERIC COATED STEEL PIPE. CORRUGATED POLYETHYLENE PIPE SHALL CONFORM TO AASHTO M294, TYPE S (SMOOTH LINED).

2) ALL NEW GRAVITY SANITARY SEWER MAINS SHALL BE LEAK TESTED BY A LOW PRESSURE AIR TEST AND DEFLECTION TESTED. THE LOW PRESSURE AIR TEST WILL BE USED TO SIMULATE INFILTRATION OR EXFILTRATION INTO OR OUT OF ALL GRAVITY SANITARY SEWERS. ALL TESTING WILL BE CONDUCTED UNDER THE SUPERVISION OF THE ENGINEER. AIR TESTING SHALL BE PERFORMED IN ACCORDANCE WITH ASTM C828-80. THE MINIMUM ALLOWED TIME FOR A PRESSURE DROP FROM 3.5 PSI TO 2.5 PSI SHALL BE 1.2 MINUTES PER 100 FEET OF 8" SEWER. AFTER THE FINAL BACKFILL HAS BEEN IN PLACE AT LEAST 30 DAYS, THE DEFLECTION TEST MAY BE PERFORMED. NO PIPE SHALL EXCEED A DEFLECTION OF FIVE PERCENT (5%). IF THE DEFLECTION TEST IS RUN USING A RIGID BALL OR MANDREL, IT SHALL SHALL HAVE A DIAMETER EQUAL TO 95% OF THE INSIDE DIAMETER OF THE PIPE. THE TEST SHALL BE PERFORMED WITHOUT MECHANICAL PULLING DEVICES. ALL MANHOLE AND PIPELINE MATERIALS, METHODS AND TESTING SHALL BE IN ACCORDANCE WITH CITY AND STATE STANDARDS AND THESE PLANS.

3) ALL SANITARY SEWER MANHOLES SHALL BE TESTED PRIOR TO CONSTRUCTION OF THE INVERT BY THE VACUUM TEST METHOD DESCRIBED IN THE TECHNICAL SPECIFICATIONS. FOR MANHOLES UP TO 10' DEEP THE MINIMUM ALLOWED TIME FOR A VACUUM DROP FROM 10" TO 9" OF MERCURY SHALL BE 2 MINUTES. FOR MANHOLES GREATER THAN 10' DEEP THE MINIMUM ALLOWED TIME SHALL BE 2 MINUTES AND 30 SECONDS.

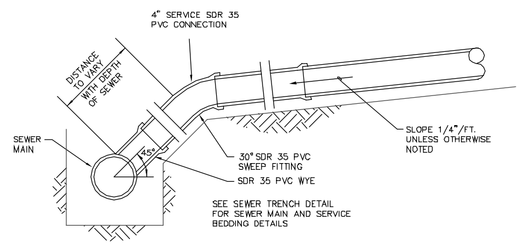

SANITARY SEWER SERVICE CONNECTION
NTS

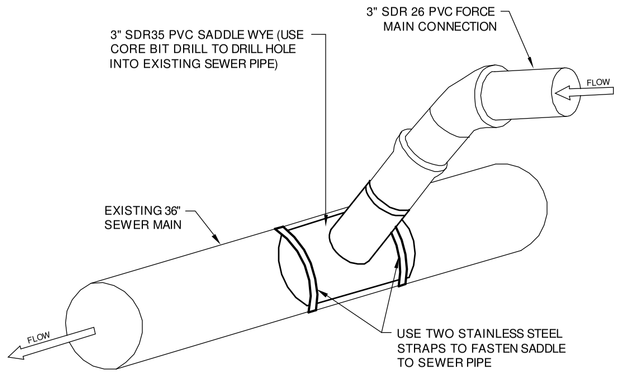

SANITARY SEWER FORCE MAIN CONNECTION INTO EXISTING SEWER MAIN
NTS

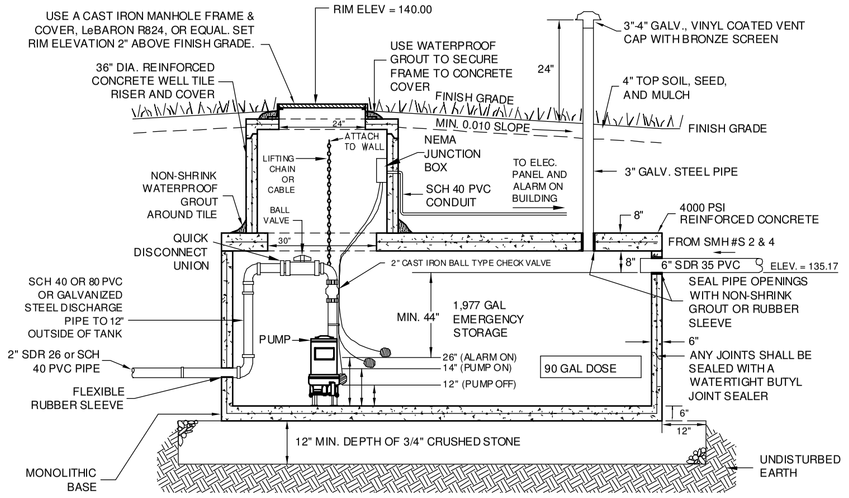

SECTION

SHARED PUMP STATION
N.T.S.

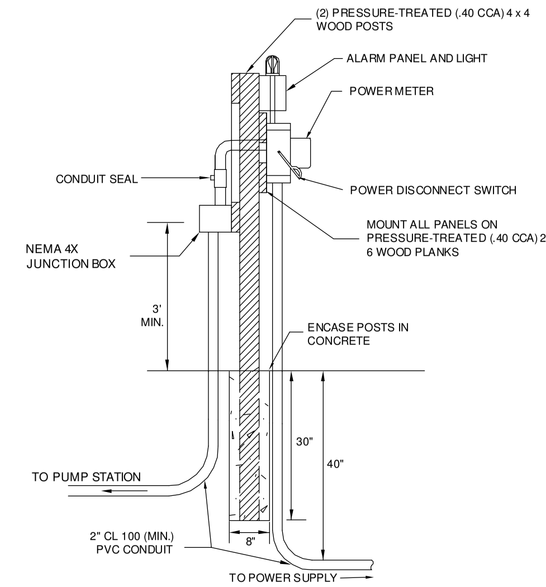

PUMP STATION CONTROL PANEL SIDE VIEW

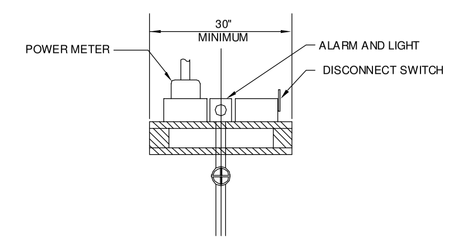

PUMP STATION CONTROL PANEL TOP VIEW

PUMP STATION DATA

PUMP STATION SPECIFICATIONS

1. THE PUMP STATION TANK SHALL HAVE SUFFICIENT CAPACITY TO ACCOMMODATE THE REQUIRED PUMP, THE SPECIFIED DOSE VOLUME, AND THE NECESSARY EMERGENCY STORAGE VOLUME.

2. LAMOUREUX & DICKINSON RECOMMENDS THE USE OF A WATERTIGHT, STEEL-REINFORCED, 4,000 PSI, 72" x 144" (I.D.) CONCRETE TANK CONSTRUCTED TO WITHSTAND EARTH LOADING. HOWEVER, THE OWNER, AT HIS/HER OWN DISCRETION, MAY USE AN ALTERNATIVE STRUCTURE IN CONFORMANCE WITH THE VERMONT ENVIRONMENTAL PROTECTION RULES.

3. THE TANK SHALL HAVE SUFFICIENT CAPACITY FOR THE SPECIFIED DOSE AND EMERGENCY STORAGE VOLUMES.

4. IF LEDGE IS ENCOUNTERED AT A DEPTH INSUFFICIENT TO ACCOMMODATE THE SPECIFIED TANK, THE CONTRACTOR SHALL CONTACT THE ENGINEER FOR ALTERNATE STRUCTURE RECOMMENDATIONS.

5. THE PUMP STATION SHALL BE CONSTRUCTED TO MINIMIZE THE RISK OF FREEZING OF EFFLUENT IN THE PIPES OR STRUCTURE.

6. BACKFILL SIDES AND TOP OF TANK WITH SAND OR GRAVEL. ALL BACKFILL MATERIAL AROUND THE TANK SHALL BE THOROUGHLY COMPACTED TO NOT LESS THAN 95% OF MAXIMUM DRY DENSITY AS DETERMINED BY THE AASHTO-T-99 STANDARD PROCTOR.

PUMP STATION DESIGN COMPUTATIONS:

A. DAILY FLOW (BASED ON EPR DESIGN FLOWS):

DESIGN FLOW FROM 9 UNITS (210 GPD/UNIT)		1,890 GPD
SEWER MAIN INFILTRATION	87 GPD	87 GPD
TOTAL FLOW	1,977 GPD	1,977 GPD

B. AVERAGE FLOWRATE :

$$\frac{1{,}977\ \text{GPD}}{16\ \text{HR/DAY} \times 60\ \text{MIN/HR}} = 2.1\ \text{GPM}$$

C. HEAD LOSSES:

3" DELIVERY PIPE (200', SDR 26 PVC)	1.2 FT
STATIC LIFT (146-125)	21.0 FT
VALVES & FITTINGS	4.0 FT
TOTAL HEAD LOSS	26.2 FT

PUMP REQUIREMENTS - 1 SUBMERSIBLE SEWAGE EJECTOR PUMP CAPABLE OF PUMPING A MINIMUM OF 50 GPM AT 30 FT TOTAL HEAD, SINGLE PHASE (HYDROMATIC SB3S OR EQUAL).

E. ELECTRICAL/CONTROLS: ALL ELECTRIC WIRING SHALL MEET THE REQUIREMENTS OF THE NATIONAL ELECTRIC CODE.

F. FLOATS: MERCURY SWITCH TO BE COMPLETELY SEALED, MADE OF CORROSIVE RESISTANT SOLUTION AND INTRINSICALLY SAFE. ELECTRICAL CABLE TO BE FLEXIBLE TWO CONDUCTOR WITH NEOPRENE JACKET.

G. DOSE DESIGN:

WITH 12 HR/DAY FLOWRATE = 3 GPM
DAILY FLOW = 1,977 GPD

DOSE VOLUME FOR 30 MIN. MAXIMUM RETENTION TIME IS 3 GPM X 30 MINUTES = 90 GALLON DOSE.

H. EMERGENCY STORAGE (BASED ON STATE DESIGN FLOWS WITH FUTURE EXPANSION):

PROVIDE 24 HOURS OF STORAGE
TOTAL DAILY FLOW (STATE FIGURES)= 1,977 GPD
1,977 GALLONS PROVIDED

I. SUBMITTALS REQUIRED: PUMP, ACCESS LID, WETWELL, FLOATS AND FLOAT HANGER BRACKET, CHECK VALVES, GATE VALVES, SOLID SLEEVE COUPLINGS, AND OPERATION AND MAINTENANCE MANUALS.

TESTING DATA

A. FORCE MAIN PRESSURE TEST: THE FORCE MAIN SHALL BE PRESSURE TESTED TO NOT LESS THAN 50 PSI AT THE HIGHEST POINT OF THE TEST SECTION. THE TEST SHALL BE OF A TWO HOUR DURATION AND THE TEST PRESSURE SHALL NOT VARY BY MORE THAN +/- 5 PSI. A LEAKAGE TEST SHALL BE PERFORMED CONCURRENTLY WITH THE PRESSURE TEST. THE ALLOWABLE LEAKAGE SHALL BE DETERMINED BY THE FOLLOWING FORMULA:

$$L = \frac{ND\sqrt{P}}{7400}$$

WHERE L = THE ALLOWABLE LEAKAGE IN GALLONS PER HOUR, N IS THE NUMBER OF JOINTS, D IS THE NOMINAL DIAMETER OF THE PIPE IN INCHES, AND P IS THE AVERAGE TEST PRESSURE IN PSI.

B. PUMP STATION TEST: THE STRUCTURE SHALL BE TESTED IN THE PRESENCE OF THE ENGINEER FOR EXFILTRATION BY FILLING THE STRUCTURES TO 1' BELOW THE ACCESS LID. A STABILIZATION PERIOD OF 1 HR SHALL BE PROVIDED TO ALLOW FOR ABSORPTION. AT THE END OF THE STABILIZATION PERIOD THE STRUCTURE SHALL BE REFILLED IF NECESSARY AND THE TEST PERIOD OF 48 HOURS SHALL BEGIN. AT THE END OF THE TEST PERIOD, THE VOLUME OF WATER CHANGE SHALL BE MEASURED. THERE SHALL BE NO VISIBLE OR MEASURABLE EXFILTRATION OR INFILTRATION OR THE TEST FAILS. IF THE TEST FAILS, THE CONTRACTOR SHALL REPAIR OR WATERPROOF AND RETEST.

C. PUMP STATION: THE CONTRACTOR AND ENGINEER SHALL BE PRESENT DURING STARTUP. A WATER SOURCE SHALL BE AVAILABLE TO PERFORM A FULL OPERATIONAL CHECK OF THE STATION INCLUDING ALL FLOAT FUNCTIONS, ALARM TESTING INDICATOR LIGHTS,

THE CONTROL SYSTEM SHALL BE CYCLED THROUGH MORE THAN ONCE TO INSURE PROPER SEQUENCING AND OPERATION OF THE PUMPS. THE PUMP SHALL BE FIELD TESTED TO INSURE THE PUMPING CAPACITY MEETS THE PROJECT REQUIREMENTS.

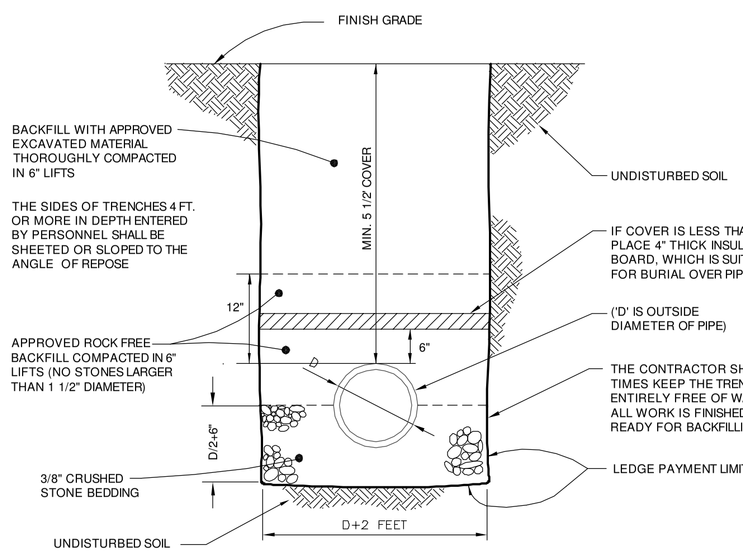

TYPICAL SANITARY & STORM SEWER TRENCH
N.T.S.

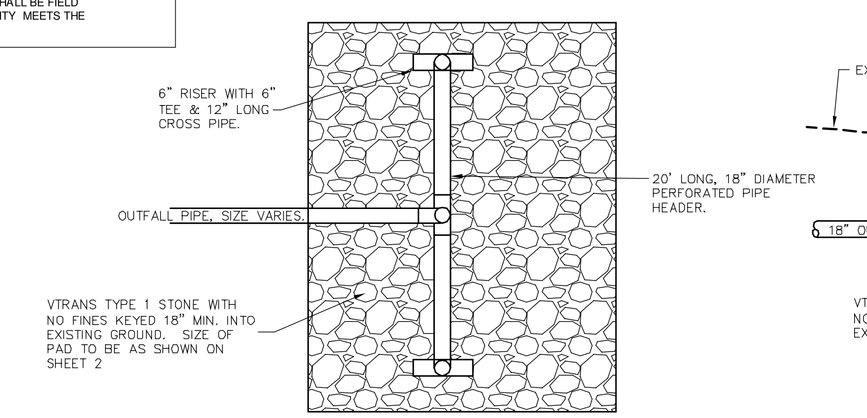

PLAN VIEW

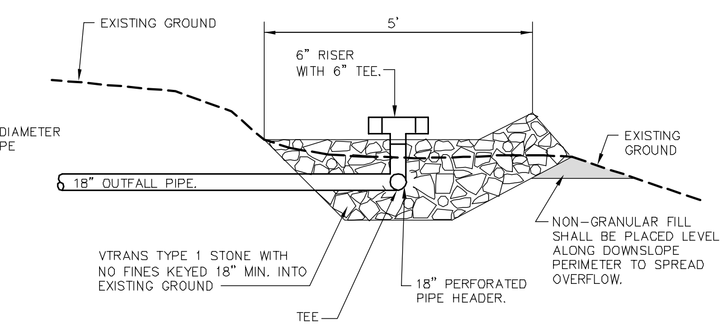

SECTION VIEW (AT PIPE)

LEVEL SPREADER DETAIL
NTS

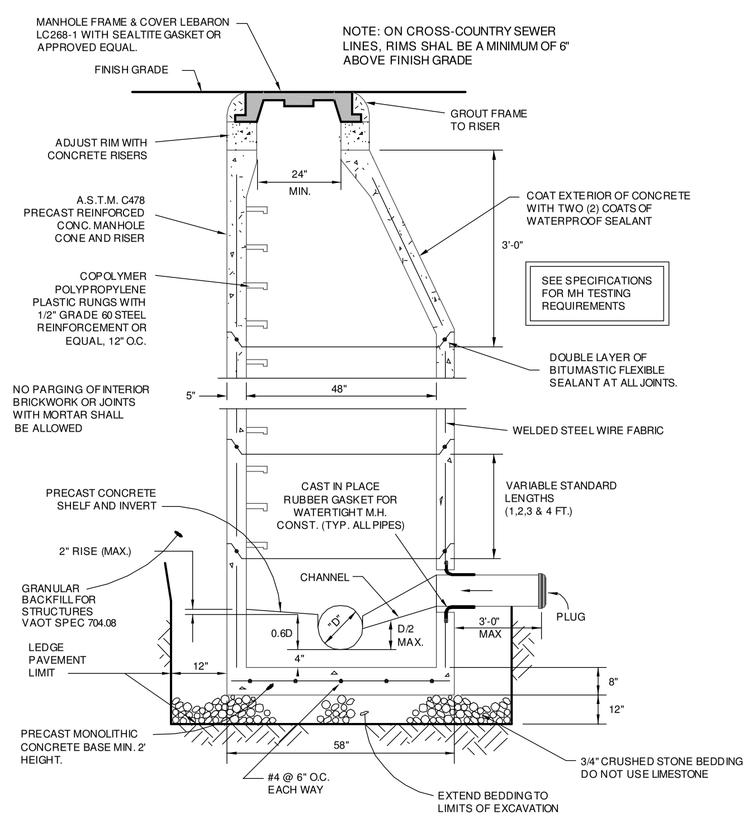

TYPICAL PRECAST SANITARY / STORM MANHOLE
NTS

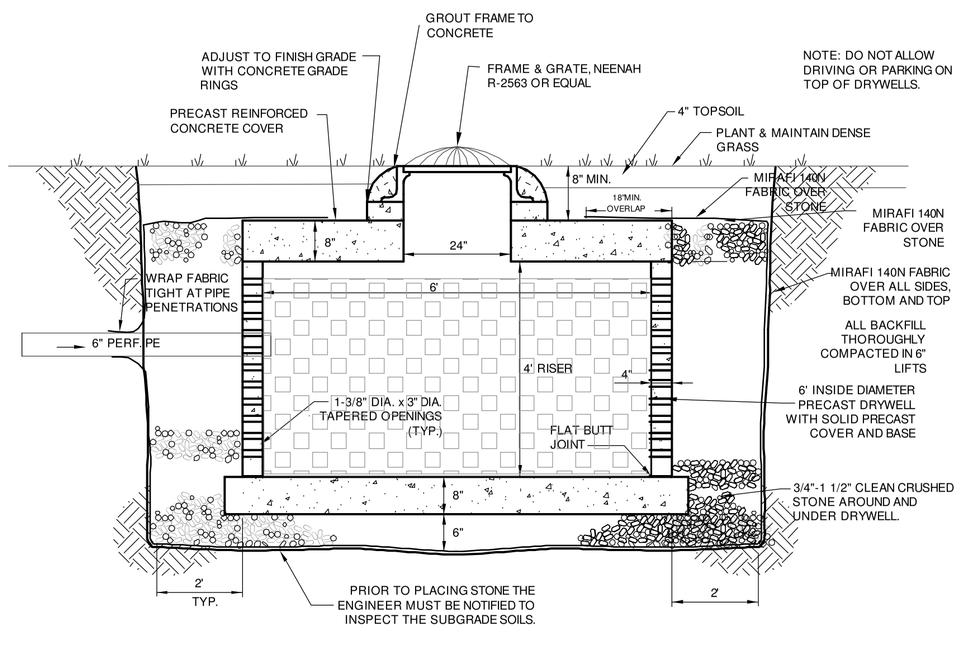

STORMWATER DRYWELL DETAIL
NTS

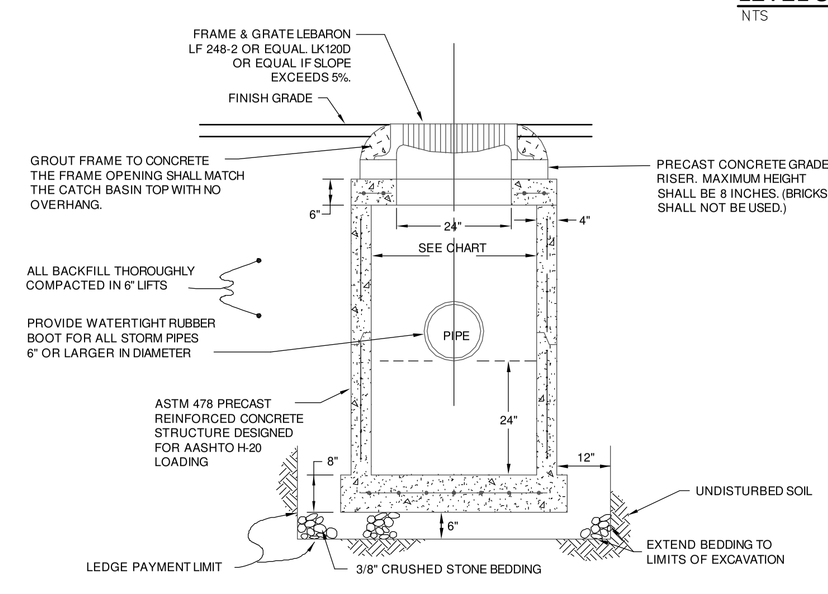

PRECAST CATCH BASIN
NTS

TYPE	CATCH BASIN DIAMETER	LARGEST PIPE DIA ALLOWED	SIDEWALL THICKNESS	CONCRETE COVER THICKNESS	BASE DIAMETER
I	36"	18"	4"	6"	50"
II	48"	30"	5"	10"	72"
III	60"	36"	6"	12"	84"
IV	72"	48"	7"	18"	96"

Date	Revision	By
4-1-15	REVISED FOR PRELIMINARY RE-FILING TO CITY	DLH
5-24-11	ADD EASEMENT AND CONVEYANCE TO CITY	DLH
4-4-11	REVISE LAYOUT	DLH
10-29-10	REVISE LAYOUT	DLH
8-26-10	GENERAL REVISIONS PER COURT APPEAL	DLH
9-11-09	REVISED PERVIOUS CONCRETE DETAILS	DLH
7-13-09	REVISED LIGHTING AND LANDSCAPING	DLH
1-9-08	REVISED DRIVEWAY LAYOUT	DLH
10-5-07	REVISED LAYOUT	DLH
8-7-07	REVISED LAYOUT	DLH

These plans shall only be used for the purpose shown below:

- ☐ Sketch/Concept
- ■ Preliminary
- ☐ Final Local Review
- ☐ Act 250 Review
- ☐ Construction
- ☐ Record Drawing

NOT FOR CONSTRUCTION

Lands of
Tim Alles & Bill Ellis
Ethan Allen Parkway, Burlington, Vermont

A PLANNED RESIDENTIAL DEVELOPMENT
SANITARY & STORM SEWER DETAILS AND SPECIFICATIONS

LAMOUREUX & DICKINSON
Consulting Engineers, Inc.
14 Morse Drive
Essex Junction, VT 05452
Tel: 802-878-4450

proj. no. 07028
survey Others
design DLH
drawn SEA
checked DJG
date 04/09/07
scale N.T.S.
sht. no. 8 of 11

P:\2007\07028-2014\dwg\07028-8.dwg 12/10/2015 10:33:56 AM