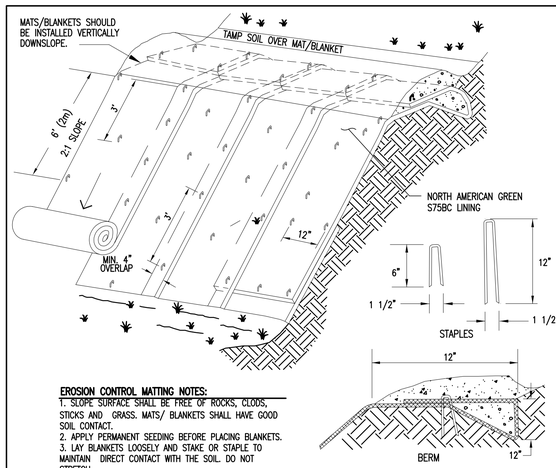

EROSION CONTROL MATTING NOTES:

1. SLOPE SURFACE SHALL BE FREE OF ROCKS, CLODS, STICKS AND GRASS. MATS/ BLANKETS SHALL HAVE GOOD SOIL CONTACT.
2. APPLY PERMANENT SEEDING BEFORE PLACING BLANKETS.
3. LAY BLANKETS LOOSELY AND STAKE OR STAPLE TO MAINTAIN DIRECT CONTACT WITH THE SOIL. DO NOT STRETCH.
4. MATTING SHALL BE BIODEGRADABLE

EROSION CONTROL MATTING

SCALE: NONE (1)

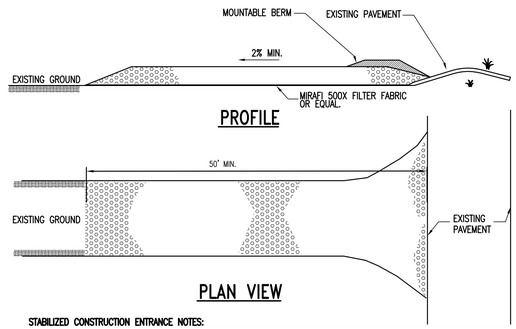

STABILIZED CONSTRUCTION ENTRANCE NOTES:

1. STONE SIZE: USE 1-1/2" CRUSHED STONE.
2. SURFACE WATER – ALL SURFACE WATER FLOWING OR DIVERTED TOWARD CONSTRUCTION ENTRANCE SHALL BE PIPED ACROSS THE ENTRANCE.
3. MAINTENANCE – THE ENTRANCE SHALL BE MAINTAINED IN A CONDITION WHICH WILL PREVENT TRACKING OR FLOWING OF SEDIMENT ONTO PUBLIC RIGHT–OF–WAYS. THIS MAY REQUIRE PERIODIC TOP DRESSING WITH ADDITIONAL STONE AS CONDITIONS DEMAND. REPAIR AND/OR CLEANOUT ANY MEASURES USED TO TRAP SEDIMENT. ALL SEDIMENT SPILLED, DROPPED, WASHED, OR TRACKED ONTO PUBLIC RIGHT–OF–WAYS MUST BE REMOVED IMMEDIATELY.
4. PERIODIC INSPECTION AND NEEDED MAINTENANCE SHALL BE PROVIDED AFTER EACH RAIN.
5. WHEELS SHALL BE CLEANED TO REMOVE MUD PRIOR TO ENTRANCE ONTO PUBLIC RIGHT–OF–WAY. WHEN WASHING IS REQUIRED, IT SHALL BE DONE ON AN AREA STABILIZED WITH STONE WHICH DRAINS INTO AN APPROVED SEDIMENT TRAPPING DEVICE.

CONSTRUCTION ENTRANCE DETAIL

SCALE: NONE (4)

EROSION CONTROL NOTES

GENERAL NOTES

1. THE "ON–SITE EROSION CONTROL PLAN COORDINATOR" SHALL BE PRESENT ON–SITE FROM DAY–TO–DAY, AND SHALL BE RESPONSIBLE FOR ENSURING THAT THE EROSION CONTROL MEASURES REQUIRED BY THE EROSION CONTROL PLAN, DETAILS AND NOTES, ARE PROPERLY INSTALLED AND MAINTAINED. THE ONSITE EROSION CONTROL PLAN COORDINATOR SHALL KEEP A WRITTEN RECORD OF INSPECTIONS AND MAINTENANCE OF EROSION CONTROL FEATURES. A COPY OF THESE PLANS AND INSPECTION/MAINTENANCE RECORDS SHALL BE KEPT ONSITE AT ALL TIMES.
2. EROSION CONTROL MEASURES SHALL BE CONDUCTED IN ACCORDANCE WITH THE "VERMONT STANDARDS AND SPECIFICATIONS FOR EROSION PREVENTION AND SEDIMENT CONTROL", DATED 2006.

TEMPORARY/CONSTRUCTION EROSION CONTROL MEASURES

1. THE SMALLEST PRACTICAL AREA OF LAND SHALL BE DISTURBED AT ANY ONE TIME DURING DEVELOPMENT. WHEN LAND IS DISTURBED, THE DISTURBANCE SHALL BE KEPT TO THE SHORTEST PRACTICAL DURATION AS APPROVED BY THE ENGINEER.
2. DUST SHALL BE CONTROLLED WITH WATER DISTRIBUTED BY A TRUCK–MOUNTED SPRAY BAR. CALCIUM CHLORIDE (AASHTO M 144) OR SODIUM CHLORIDE (AASHTO M 143) SHALL BE USED AS DIRECTED BY THE ENGINEER.
3. SILT FENCES SHALL BE INSTALLED GENERALLY 10 FEET FROM THE BASE OF THE FILL SLOPES, OR AS SHOWN ON THE PLANS. THESE SHALL REMAIN IN PLACE UNTIL THE PROJECT SITE HAS BEEN STABILIZED. SEDIMENT SHALL BE REMOVED FROM BEHIND THE SILT FENCE WHEN IT BECOMES 6 INCHES DEEP AT THE FENCE. THE SILT FENCE WILL BE REPAIRED AS NECESSARY TO MAINTAIN A PROPER SEDIMENT BARRIER.
4. EXCAVATED MATERIAL FROM EARTH EXCAVATION AND DITCH DIGGING SHALL BE PLACED ONSITE IN A LOCATION TO BE APPROVED OF BY THE OWNER AND/OR THE ENGINEER OR USED FOR PROJECT FILL MATERIAL IF DETERMINED SUITABLE BY THE OWNER'S REPRESENTATIVE.
5. STOCKPILED MATERIAL (TOPSOIL, BORROW, ETC.) SHALL HAVE SILT FENCE CONSTRUCTED AROUND THE PERIMETER. THE STOCKPILED MATERIAL SHALL BE SEEDED AND MULCHED AS SOON AS POSSIBLE TO PREVENT SOIL EROSION AND SEDIMENTATION OFF SITE. LOCATE STOCKPILES ON THE UPHILL SIDE OF DISTURBED AREAS, IF POSSIBLE. DURING WINDY CONDITIONS, STOCKPILED MATERIAL SHALL BE COVERED OR WATERED APPROPRIATELY TO PREVENT WIND EROSION.
6. SLOPES GREATER THAN 3:1 SHALL HAVE EROSION CONTROL NETTING INSTALLED TO STABILIZE THE SLOPE AND REDUCE THE EROSION POTENTIAL. NETTING SHALL BE BIODEGRADABLE WITH A 12 MONTH LONGEVITY, S150BN AS MANUFACTURED OR APPROVED EQUIVALENT. INSTALL NETTING OVER MULCHED SLOPES SO THAT ALL PARTS ARE IN CONTACT WITH THE SOIL AND MULCH. PIN NETTING WITH WIRE STAPLES 3 FEET O.C. TO ENSURE FULL BONDING WITH SOIL SURFACE. THE SLOPE SURFACES SHOULD BE LEFT SLIGHTLY ROUGHENED AND NOT SMOOTH. IF LARGE AMOUNTS OF OFFSITE WATER WILL DRAIN OVER THESE SLOPES, TEMPORARY DIVERSION SWALES SHALL BE INSTALLED UP SLOPE UNTIL THE SLOPE VEGETATION STABILIZES.

PERMANENT EROSION CONTROL MEASURES

1. WHEN FINAL GRADES ARE REACHED IN AN AREA, IT SHALL BE SEEDED AND MULCHED WITHIN 48 HOURS.
2. THE CONTRACTOR SHALL BE RESPONSIBLE FOR THE CONTINUED MAINTENANCE OF ALL DISTURBED AREAS, INCLUDING WATERING UNTIL THE AREA IS INSPECTED AND ACCEPTED BY THE OWNER OR ENGINEER.
3. AFTER THE SITE IS STABILIZED, REMOVE ALL TEMPORARY MEASURES AND INSTALL PERMANENT VEGETATION ON THE DISTURBED AREAS.
4. RE–SEEDING SHALL BE DONE UNTIL ALL AREAS ARE COMPLETELY COVERED WITH A MATURE STRAND OF GRASS. AN AREA SHALL BE CONSIDERED COVERED WHEN THE ENTIRE SURFACE CONTAINS A VEROUROUS STAND OF GRASS. AREAS THAT, IN THE OPINION OF THE ENGINEER, ARE PREDOMINATELY WEEDS SHALL BE PLOWED UP, FINE GRADED, FERTILIZED AND RE–SEEDED IN THE MANNER SPECIFIED PREVIOUSLY, EXERCISING CAUTION NOT TO CAUSE DAMAGE TO NEW OR EXISTING PLANT MATERIAL.

WINTER EROSION CONTROL NOTES

WINTER CONSTRUCTION PROCEDURES

1. DURING WINTER CONSTRUCTION, INSPECTIONS BY THE ON–SITE PLAN COORDINATOR SHALL OCCUR DAILY WHEN AREAS ARE UN–STABLE, AND WEEKLY PRIOR TO ANY FORECASTED RAIN, THAW OR SPRING MELT WHEN TEMPORARY STABILIZATION IS IN PLACE.

2. IN AREAS TO BE STABILIZED BY VEGETATION, ALL SEEDING MUST BE COMPLETED BY SEPTEMBER 15 TO ALLOW GROWTH TO OCCUR PRIOR TO THE GROUND FREEZING. STABILIZATION OF ALL OTHER DISTURBED AREAS SHALL BE COMPLETED BY OCTOBER 15.

3. ENLARGED ACCESS POINTS, STABILIZED TO PROVIDE FOR SNOW STOCKPILING SHALL BE INSTALLED.

4. LIMITS OF DISTURBANCE SHALL BE MOVED OR REPLACED TO REFLECT BOUNDARY OF WINTER WORK.

5. SNOW WILL NOT BE PILED WITHIN 25 FEET OF PERIMETER CONTROLS (SUCH AS SILT FENCE) TO ALLOW FOR CLEARING AND MAINTENANCE. SNOW IS TO BE REMOVED FROM ALL STRUCTURAL EROSION PREVENTION AND SEDIMENTATION CONTROL MEASURES FOLLOWING EACH SIGNIFICANT SNOWFALL. NO SNOW STORAGE UP–GRADIENT OF DISTURBANCE. NO SNOW DISPOSAL IN SEDIMENT PONDS/BASINS. IF NECESSARY, SNOW/ICE MUST BE REMOVED PRIOR TO STABILIZATION OF DISTURBED AREAS. ACCESS POINTS SHALL BE ENLARGED AND STABILIZED TO ALLOW FOR SNOW STOCKPILING.

6. IN AREAS OF DISTURBANCE WITHIN 100 FT OF A RECEIVING WATER, SILT FENCE SHALL BE REINFORCED OR ELSE REPLACED WITH PERIMETER DIKES, SWALES OR OTHER PRACTICES RESISTANT TO THE FORCES OF SNOW LOADS.

7. DRAINAGE STRUCTURES SHALL BE KEPT OPEN AND FREE OF SNOW AND ICE DAMS.

8. ALL EROSION PREVENTION AND SEDIMENT CONTROL MEASURES ARE TO BE IN PLACE BY OCTOBER 15, OR IF NOT POSSIBLE, THEN PRIOR TO GROUND FREEZE.

9. MULCH IS TO BE APPLIED AT THE END OF EACH WORKDAY TO ALL EXPOSED AREAS THAT HAVE NOT YET REACHED FINAL GRADE AT TWICE THE RATE INDICATED IN THE SEEDING AND MULCHING DETAIL FOR THE REGULAR CONSTRUCTION SEASON. MULCH SHALL BE TRACKED IN OR STABILIZED WITH NETTING.

10. TO ENSURE COVER OF DISTURBED SOIL IN ADVANCE OF A MELT EVENT, AREAS OF DISTURBED SOIL MUST BE STABILIZED AT THE END OF EACH WORK DAY, WITH THE FOLLOWING EXCEPTIONS:
    A) IF NO PRECIPITATION WITHIN 24 HOURS IS FORECAST AND WORK WILL RESUME IN THE SAME DISTURBED AREA WITHIN 24 HOURS, DAILY STABILIZATION IS NOT NECESSARY.
    B) DISTURBED AREAS THAT COLLECT AND RETAIN RUNOFF, SUCH AS HOUSE FOUNDATIONS OR OPEN UTILITY TRENCHES.

11. SNOW AND ICE SHALL BE REMOVED TO LESS THAN 1" THICKNESS PRIOR TO STABILIZATION.

12. STONE STABILIZATION, 10 TO 20 FT WIDE IN AREAS SUCH AS THE PERIMETER OF BUILDINGS UNDER CONSTRUCTION WHERE CONSTRUCTION VEHICLE TRAFFIC IS ANTICIPATED SHALL BE INSTALLED.

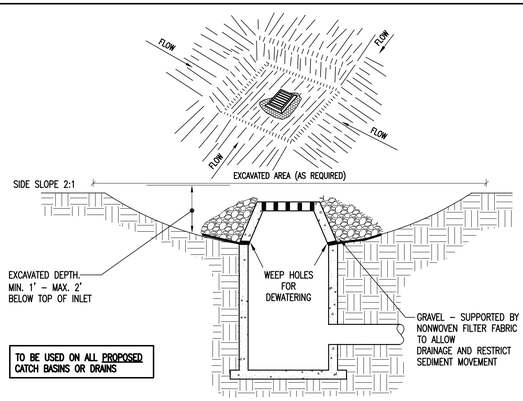

CONSTRUCTION SPECIFICATIONS

1. CLEAR THE AREA OF ALL DEBRIS THAT WILL HINDER EXCAVATION.
2. GRADE APPROACH TO THE INLET UNIFORMLY AROUND THE BASIN.
3. WEEP HOLES SHALL BE PROTECTED BY GRAVEL.
4. UPON STABILIZATION OF CONTRIBUTING DRAINAGE AREA, SEAL WEEP HOLES, FILL BASIN WITH STABLE SOIL TO FINAL GRADE, COMPACT IT PROPERLY AND STABILIZE WITH PERMANENT SEEDING.
5. GRAVEL BAGS, GRATE GUARDS, FILTREXX OR SEDIGUARD INLET PROTECTION DEVICES MAY BE USED. SUBMIT PRODUCT INFORMATION TO ENGINEER FOR REVIEW PRIOR TO USE. INSTALL PRODUCTS IN ACCORDANCE WITH THE MANUFACTURER'S INSTRUCTIONS AND THE LATEST EDITION OF THE VT EPSC STANDARDS AND SPECIFICATIONS.

EXCAVATED STORM DRAIN INLET PROTECTION DETAIL

NOT TO SCALE (2)

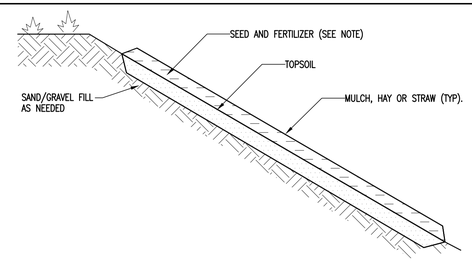

NOTES FOR SEEDED AND MULCHED AREAS

1. LANDSCAPE PLANS AND SPECIFICATIONS TAKE PRECEDENCE WHERE APPLICABLE TO FINAL LAWN AND PLANTING AREAS. FOR TEMPORARY STABILIZATION AND AREAS NOT COVERED BY LANDSCAPE PLANS, THE FOLLOWING APPLY.
2. SEEDING AND MULCHING OF DISTURBED AREAS SHALL TAKE PLACE WITHIN 48 HOURS OF FINAL GRADING.
3. MULCH: TYPICALLY HAY OR STRAW MAY BE UTILIZED AND SHALL BE APPLIED AT A RATE OF 90–1,000 LBS/1,000 SF. MULCH SHALL NOT BE PLACED ON SLOPES OF GREATER THAN 3:1. SEED IMPREGNATED EROSION CONTROL NETTING SHALL BE USED IN ITS PLACE.
4. SEED: SEEDING SHALL OCCUR AFTER APRIL 15 AND PRIOR TO SEPTEMBER 15TH IN ORDER TO ESTABLISH A STAND OF GRASS PRIOR TO GROUND FREEZING. SEED SHALL BE IN ACCORDANCE WITH SEED SPECIFICATION ON THIS SHEET.
5. COVER SEED WITH $\frac{1}{4}$ INCH SOIL UNLESS A HYDROSEEDER IS USED.
6. MULCH ANCHORING: SHALL BE ACCOMPLISHED BY DEGRADABLE MULCH NETTING. USE WHEN SLOPES ARE GREATER THAN 10%.
7. TOPSOIL AND MULCHING NOT TO BE APPLIED IN AREAS OF TRAVEL WAYS.

SEEDED AND MULCHED AREAS DETAIL

SCALE: NONE (5)

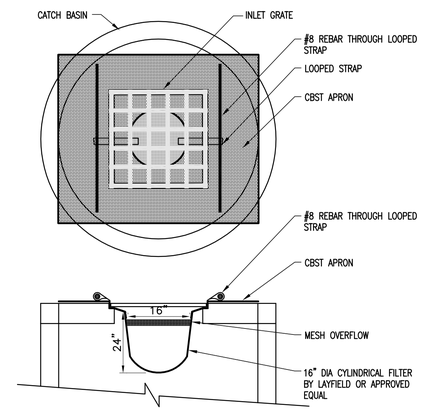

*TO BE UTILIZED ON EXISTING CATCH BASIN WITHIN COLCHESTER AVENUE

FABRIC INLET PROTECTION

SCALE: NONE (7)

SITE/EARTHWORK SPECIFICATIONS

1. PRIOR TO THE START OF THE WORK, A PRE–CONSTRUCTION MEETING WILL BE HELD WITH THE CONTRACTOR, OWNER, PROJECT ENGINEER AND A REPRESENTATIVE FOR THE TOWN OF HINESBURG TO REVIEW PROCEDURES AND IDENTIFY RESPONSIBILITIES. THE TOWN SHALL BE GIVEN NOTICE AT LEAST 24 HOURS PRIOR TO THE MEETING. UNLESS STATED OTHERWISE, ALL MATERIALS AND METHODS SHALL BE IN ACCORDANCE WITH THE MOST RECENT VERSION OF THE STATE OF VERMONT SPECIFICATIONS FOR ROAD AND BRIDGE CONSTRUCTION.

2. CLEARING AND GRUBBING– ALL TOPSOIL AND UNSUITABLE MATERIALS SHALL BE REMOVED FROM IMPACTED AREAS.

3. COMPACTION SHALL BE PERFORMED USING VIBRATORY ROLLERS AND WATER IN LIFTS OF NO GREATER THAN SIX INCHES. COMPACTION SHALL BE PERFORMED UNTIL THE REQUIRED DENSITY IS ACHIEVED. DENSITY SHALL BE DETERMINED BY AASHTO T238 METHOD AND SHALL NOT BE LESS THAN 95 PERCENT OF THE MAXIMUM DENSITY FOR PAVED AREAS AND 90 PERCENT OF THE MAXIMUM DENSITY FOR NON PAVED AREAS DETERMINED IN ACCORDANCE WITH AASHTO T99.

4. COMPACTION TESTING SHALL BE PERFORMED FOR EVERY LAYER OF MATERIAL PLACED AND FOR EVERY 1000 SQUARE FEET OF AREA.

5. ALL REMAINING DISTURBED AREAS WITHIN THE RIGHT OF WAY SHALL BE FERTILIZED AND SEEDED IN ACCORDANCE WITH THE VERMONT STATE SPECIFICATIONS.

6. THE SEEDING OF SLOPES AND DITCHES SHALL REQUIRE THE USE OF EROSION CONTROL MATTING.

7. COST OF INITIAL INSPECTION AND TESTING SHALL BE PAID BY THE OWNER. SUBSEQUENT TESTING OF MATERIALS NOT PASSING INITIAL INSPECTION, SHALL BE PAID BY THE CONTRACTOR. 8. ALL EARTHWORK MATERIALS SHALL BE OBTAINED FROM APPROVED SOURCES. THEY SHALL CONSIST OF SATISFACTORILY GRADED, FREE DRAINING MATERIAL, REASONABLY FREE FROM LOAM, SILT, CLAY AND ORGANIC MATERIAL. EARTHWORK MATERIALS SHALL MEET THE REQUIREMENTS OF THE FOLLOWING TABLES:

A. SAND BLANKET/BEDDING:

SIEVE DESIGNATION	PERCENT BY WEIGHT PASSING SQUARE MESH SIEVES
2 INCHES	100
$1\frac{1}{2}$ INCHES	90 – 100
$\frac{1}{2}$ INCH	70 – 100
NO. 4	60 – 100
NO. 100	0 – 20
NO. 200	0 – 8

B. $\frac{3}{4}$" CRUSHED STONE:

SIEVE DESIGNATION	PERCENT BY WEIGHT PASSING SQUARE MESH SIEVES
1 INCH	100
$\frac{3}{4}$ INCHES	90 – 100
$\frac{3}{8}$ INCHES	20 – 55
No. 4	0 – 10
No. 8	0 – 5

C. GRAVEL SUB–BASE:

SIEVE DESIGNATION	PERCENT BY WEIGHT PASSING SQUARE MESH SIEVES
NO. 4	20 – 60
NO. 100	0 – 12
NO. 200	0 – 6

D. COARSE CRUSHED GRAVEL:

SIEVE DESIGNATION	PERCENT BY WEIGHT PASSING SQUARE MESH SIEVES
4 INCHES	95 – 100
NO. 4	25 – 50
NO. 100	0 – 12
NO. 200	0 – 6

E. FINE CRUSHED GRAVEL:

SIEVE DESIGNATION	PERCENT BY WEIGHT PASSING SQUARE MESH SIEVES
2 INCHES	100
$1\frac{1}{2}$ INCHES	90 – 100
NO. 4	30 – 60
NO. 100	0 – 12
NO. 200	0 – 6

F. GRANULAR BACKFILL:

SIEVE DESIGNATION	PERCENT BY WEIGHT PASSING SQUARE MESH SIEVES
3 INCHES	100
NO. 4	45 – 75
NO. 100	0 – 12
NO. 200	0 – 6

G. TYPE I STONE FOR STONE FILL THE LONGEST DIMENSION OF THE STONE SHALL VARY FROM 1 INCH TO 12 INCHES, AND AT LEAST 50 PERCENT OF THE VOLUME OF THE STONE IN PLACE SHALL HAVE A LEAST DIMENSION OF FOUR INCHES.

H. TYPE II STONE FOR STONE FILL THE LONGEST DIMENSION OF THE STONE SHALL VARY FROM TWO INCHES TO 36 INCHES, AND AT LEAST 50 PERCENT OF THE VOLUME OF THE STONE IN PLACE SHALL HAVE A LEAST DIMENSION OF 12 INCHES.

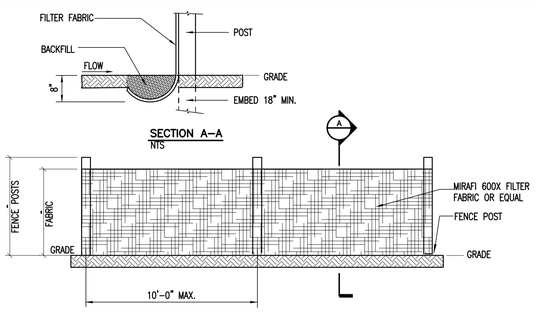

SILT FENCE NOTES:

1.) SILT FENCE SHALL BE PREFABRICATED EROSION CONTROL FENCE BY MIRAFI OR EQUAL, OR CONSTRUCTED IN PLACE AS SPECIFIED HEREIN.
2.) WHEN TWO SECTIONS OF FILTER FABRIC ADJOIN EACH OTHER, THEY SHALL BE OVERLAPPED BY 6", FOLDED AND STAPLED.
3.) INSPECTION SHALL BE FREQUENT (MINIMUM ONCE A WEEK AND AFTER EVERY RAINFALL). MAINTENANCE SHALL BE PERFORMED AS NEEDED, AND SEDIMENT REMOVED WHEN "BULGES" DEVELOP IN SILT FENCE.

SILT FENCE DETAIL

SCALE: NONE (3)

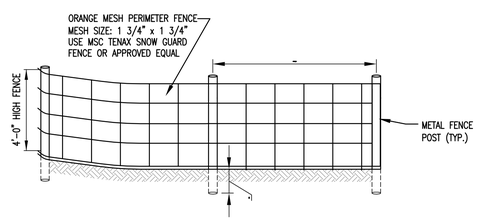

ORANGE CONSTRUCTION FENCE DETAIL

SCALE: NONE (6)

ISSUED FOR PERMIT
REVIEW 2/27/15
REVISED 5/15/15

Stamp

Rev. No.	Description	DATE
1	REVISED PER DAB & CONSERVATION BOARD COMMENTS/MEETINGS	5/15/15

ENGINEERING VENTURES PC
208 Flynn Avenue, Suite 2A Burlington, VT 05401
tel: 802.863.6225 • fax 802.863.6306
85 Mechanic Street, Suite 350A Lebanon, NH 03766
tel: 603.442.9333 • fax 603.442.9331
www.engineeringventures.com

Client: NATHANIEL HAYWARD
302 Mountain View Drive
Suite 100
Colchester, VT 05446
(802) 578–3078

Sheet Title: Erosion Control Details

Project Title: 380 Colchester Avenue
Burlington, VT

Designed By:	MD/KW
Checked By:	KW
Drawn By:	MD
Scale:	N.T.S.
Date:	02/27/15

C2.2

EV#14062