INDEX OF SHEETS

DESCRIPTION	SHEET #
TITLE SHEET	1
CONVENTIONAL SYMBOLOGY LEGEND SHEET	2
TYPICAL SHEET 1	3
LAYOUT SHEETS	4-8
PROFILE SHEETS	9-11
DRAINAGE SHEETS	12-16
UTILITY SHEETS	17-21
SIGNAL PLAN	22
LANDSCAPING & LIGHTING PLANS	23-27
CROSS SECTIONS	28-86
BORING PLAN SHEETS	87-91

CITY OF BURLINGTON

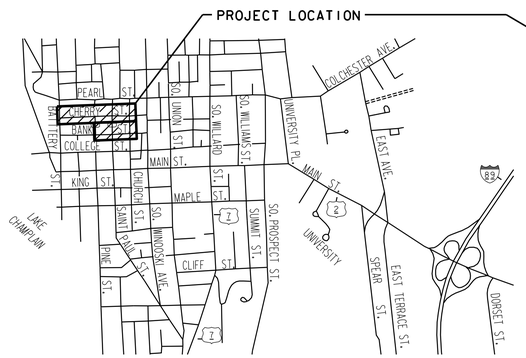

VICINITY MAP
NOT TO SCALE

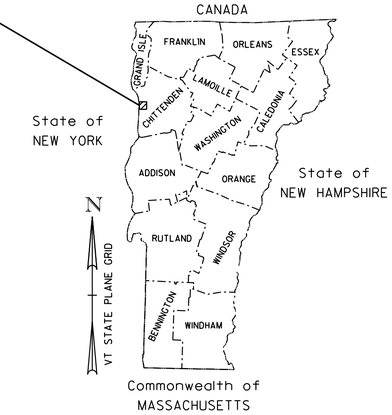

PROPOSED IMPROVEMENT
CITY OF BURLINGTON
COUNTY OF CHITTENDEN
GREAT STREETS - BANK & CHERRY

PROJECT LOCATION: BEGINNING AT THE BATTERY STREET/CHERRY STREET INTERSECTION AND CONTINUING EASTERLY ALONG CHERRY STREET APPROXIMATELY 1,600 FEET TO THE INTERSECTION WITH CHURCH STREET. ALSO, BEGINNING AT THE PINE STREET/BANK STREET INTERSECTION AND CONTINUING EASTERLY ALONG BANK STREET APPROXIMATELY 800 FEET TO THE INTERSECTION WITH CHURCH STREET.

PROJECT DESCRIPTION: WORK TO BE PERFORMED UNDER THIS CONTRACT INCLUDES FULL DEPTH RECONSTRUCTION OF PORTIONS OF CHERRY AND BANK STREETS, STORM WATER DRAINAGE SYSTEMS, STORM WATER TREATMENT, PERVIOUS AND IMPERVIOUS PAVERS, CONCRETE SIDEWALKS, GRANITE CURBING, WATER MAIN, LANDSCAPING, LIGHTING, SIGNAGE, TRAFFIC SIGNAL; AND PUBLIC STREET AMENITIES INCLUDING BENCHES, BULLETIN BOARDS, BICYCLE RACKS, BUS SHELTERS, AND TRASH/RECYCLING RECEPTACLES.

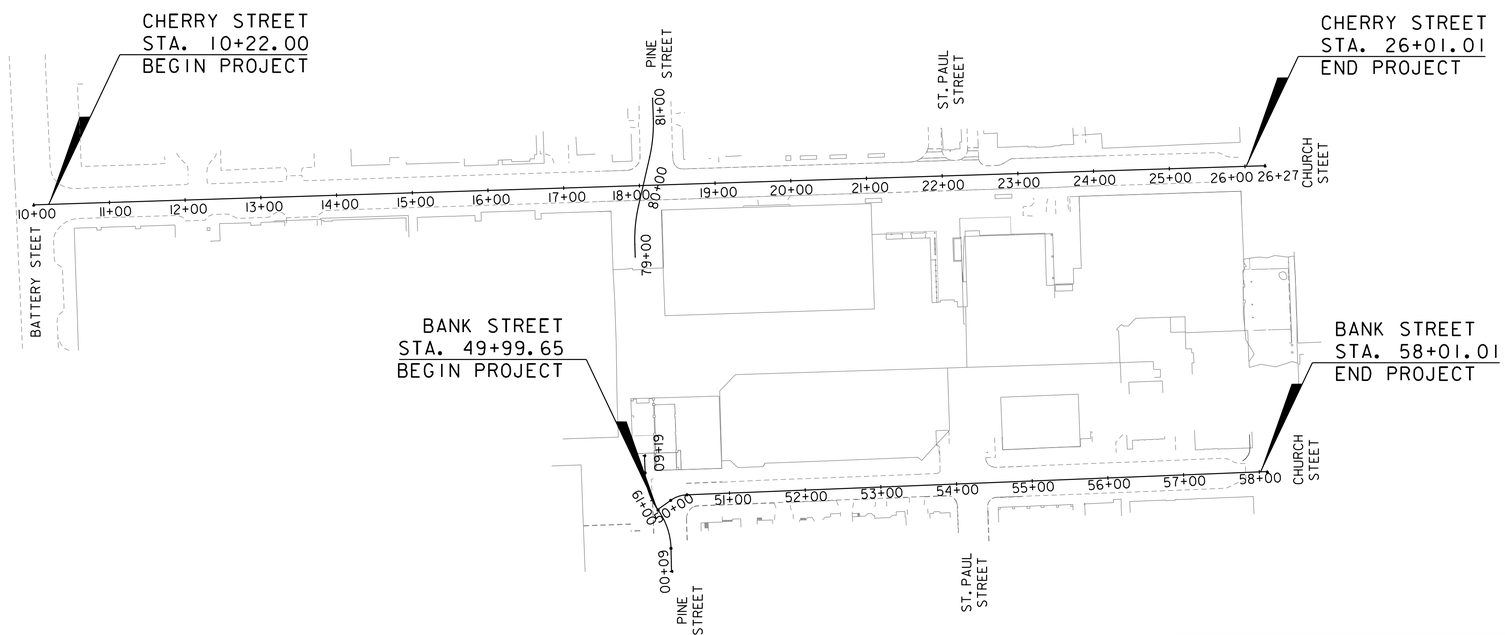

CONSTRUCTION IS TO BE CARRIED ON IN ACCORDANCE WITH THESE PLANS AND THE STANDARD SPECIFICATIONS FOR CONSTRUCTION DATED 2018, AS APPROVED BY THE FEDERAL HIGHWAY ADMINISTRATION ON APRIL 13, 2018 FOR USE ON THIS PROJECT, INCLUDING ALL SUBSEQUENT REVISIONS AND SUCH REVISED SPECIFICATIONS AND SPECIAL PROVISIONS AS ARE INCORPORATED IN THESE PLANS.

30% CONCEPTUAL PLANS
6/29/2018

SURVEYED BY : VSE SURVEYED DATE : 05/23/2018	SURVEYED BY : EV SURVEYED DATE : 02/28/2018	SURVEYED BY : LATITUDE SURVEYED DATE : 03/02/2018
DATUM VERTICAL NAVD 88 FT HORIZONTAL NAD 83 (2007) sFT	DATUM VERTICAL NAVD 88 FT HORIZONTAL NAD 83 (2007) sFT	DATUM VERTICAL NAVD 88 FT HORIZONTAL NAD 83 (2007) sFT

0 100 200
SCALE IN FEET

Stantec
Stantec Consulting Services Inc.
55 Green Mountain Drive
South Burlington VT U.S.A. 05403
Phone: (802) 864-0223
Fax: (802) 864-0165
www.stantec.com

CITY OF BURLINGTON CHAIR, TRUSTEES
APPROVED _____ DATE _____

PROJECT MANAGER : LAURA WHEELOCK, PE

PROJECT NAME : CITY OF BURLINGTON
PROJECT NUMBER : 195311541

SHEET 1 OF 91 SHEETS

GENERAL INFORMATION

SYMBOLOGY LEGEND NOTE

THE SYMBOLOGY ON THIS SHEET IS INTENDED TO COVER STANDARD CONVENTIONAL SYMBOLOGY. THE SYMBOLOGY IS USED FOR EXISTING & PROPOSED FEATURES WITH HEAVIER LINEWEIGHT, IN COMBINATION WITH PROJECT ANNOTATION, AS NOTED ON PROJECT PLAN SHEETS. THIS LEGEND SHEET COVERS THE BASICS. SYMBOLOGY ON PLANS MAY VARY, PLAN ANNOTATIONS AND NOTES SHOULD BE USED TO CLARIFY AS NEEDED.

R.O.W. ABBREVIATIONS (CODES) & SYMBOLS

POINT	CODE	DESCRIPTION
	CH	CHANNEL EASEMENT
	CONST	CONSTRUCTION EASEMENT
	CUL	CULVERT EASEMENT
	D&C	DISCONNECT & CONNECT
	DIT	DITCH EASEMENT
	DR	DRAINAGE EASEMENT
	DRIVE	DRIVEWAY EASEMENT
	EC	EROSION CONTROL
	HWY	HIGHWAY EASEMENT
	I&M	INSTALL & MAINTAIN EASEMENT
	LAND	LANDSCAPE EASEMENT
	R&RES	REMOVE & RESET
	R&REP	REMOVE & REPLACE
	SR	SLOPE RIGHT
	UE	UTILITY EASEMENT
	(P)	PERMANENT EASEMENT
	(T)	TEMPORARY EASEMENT
■	BNDNS	BOUND SET
⊡	BNDNS	BOUND TO BE SET
●	IPNS	IRON PIN SET
◎	IPNS	IRON PIN TO BE SET
⊠	CALC	EXISTING ROW POINT
○	PROW	PROPOSED ROW POINT
[LENGTH]		LENGTH CARRIED ON NEXT SHEET

COMMON TOPOGRAPHIC POINT SYMBOLS

POINT	CODE	DESCRIPTION
	APL	BOUND APPARENT LOCATION
	BM	BENCHMARK
	BND	BOUND
	CB	CATCH BASIN
	COMB	COMBINATION POLE
	DITHR	DROP INLET THROATED DNC
	EL	ELECTRIC POWER POLE
	FPOLE	FLAGPOLE
	GASFIL	GAS FILLER
	GP	GUIDE POST
	GSO	GAS SHUT OFF
	GUY	GUY POLE
	GUYW	GUY WIRE
	GV	GATE VALVE
	H	TREE HARDWOOD
	HCTRL	CONTROL HORIZONTAL
	HVCTRL	CONTROL HORIZ. & VERTICAL
	HYD	HYDRANT
	IP	IRON PIN
	IPIPE	IRON PIPE
	LI	LIGHT - STREET OR YARD
	MB	MAILBOX
	MH	MANHOLE (MH)
	MM	MILE MARKER
	PM	PARKING METER
	PMK	PROJECT MARKER
	POST	POST STONE/WOOD
	RRSIG	RAILROAD SIGNAL
	RRSL	RAILROAD SWITCH LEVER
	S	TREE SOFTWOOD
	SAT	SATELLITE DISH
	SHRUB	SHRUB
	SIGN	SIGN
	STUMP	STUMP
	TEL	TELEPHONE POLE
	TIE	TIE
	TSIGN	SIGN W/DOUBLE POST
	VCTRL	CONTROL VERTICAL
	WELL	WELL
	WSO	WATER SHUT OFF

THESE ARE COMMON VAOT SURVEY POINT SYMBOLS FOR EXISTING FEATURES, ALSO USED FOR PROPOSED FEATURES WITH HEAVIER LINEWEIGHT, IN COMBINATION WITH PROPOSED ANNOTATION.

PROPOSED GEOMETRY CODES

CODE	DESCRIPTION
PC	POINT OF CURVATURE
PI	POINT OF INTERSECTION
CC	CENTER OF CURVE
PT	POINT OF TANGENCY
PCC	POINT OF COMPOUND CURVE
PRC	POINT OF REVERSE CURVE
POB	POINT OF BEGINNING
POE	POINT OF ENDING
STA	STATION PREFIX
AH	AHEAD STATION SUFFIX
BK	BACK STATION SUFFIX
D	CURVE DEGREE OF (100FT)
R	CURVE RADUIS OF
T	CURVE TANGENT LENGTH
L	CURVE LENGTH OF
E	CURVE EXTERNAL DISTANCE

UTILITY SYMBOLOGY

UNDERGROUND UTILITIES

UGU	UTILITY (GENERIC-UNKNOWN)
UT	TELEPHONE
UE	ELECTRIC
UC	CABLE (TV)
UEC	ELECTRIC+CABLE
UET	ELECTRIC+TELEPHONE
UCT	CABLE+TELEPHONE
UECT	ELECTRIC+CABLE+TELEP.
G	GAS LINE
W	WATER LINE
S	SANITARY SEWER (SEPTIC)

ABOVE GROUND UTILITIES (AERIAL)

AGU	UTILITY (GENERIC-UNKNOWN)
T	TELEPHONE
E	ELECTRIC
C	CABLE (TV)
EC	ELECTRIC+CABLE
ET	ELECTRIC+TELEPHONE
AER E&T	ELECTRIC+TELEPHONE
CT	CABLE+TELEPHONE
ECT	ELECTRIC+CABLE+TELEP.
	UTILITY POLE GUY WIRE

PROJECT CONSTRUCTION SYMBOLOGY

PROJECT DESIGN & LAYOUT SYMBOLOGY

CZ	CLEAR ZONE
	PLAN LAYOUT MATCHLINE

PROJECT CONSTRUCTION FEATURES

	TOP OF CUT SLOPE
	TOE OF FILL SLOPE
	STONE FILL
	BOTTOM OF DITCH ℄
	CULVERT PROPOSED
	STRUCTURE SUBSURFACE
PDF	PROJECT DEMARCATION FENCE
BF	BARRIER FENCE
	TREE PROTECTION ZONE (TPZ)
	STRIPING LINE REMOVAL
	SHEET PILES

CONVENTIONAL BOUNDARY SYMBOLOGY

BOUNDARY LINES

TOWN LINE	TOWN BOUNDARY LINE
COUNTY LINE	COUNTY BOUNDARY LINE
STATE LINE	STATE BOUNDARY LINE
	PROPOSED STATE R.O.W. (LIMITED ACCESS)
	PROPOSED STATE R.O.W.
	STATE ROW (LIMITED ACCESS)
	STATE ROW
	TOWN ROW
	PERMANENT EASEMENT LINE (P)
	TEMPORARY EASEMENT LINE (T)
	SURVEY LINE
P/L	PROPERTY LINE (P/L)
SR	SLOPE RIGHTS
6f	6F PROPERTY BOUNDARY
4f	4F PROPERTY BOUNDARY
HAZ	HAZARDOUS WASTE

EPSC LAYOUT PLAN SYMBOLOGY

EPSC MEASURES

	FILTER CURTAIN
	SILT FENCE
	SILT FENCE WOVEN WIRE
	CHECK DAM
	DISTURBED AREAS REQUIRING RE-VEGETATION
	EROSION MATTING

ENVIRONMENTAL RESOURCES

	WETLAND BOUNDARY
	RIPARIAN BUFFER ZONE
	WETLAND BUFFER ZONE
	SOIL TYPE BOUNDARY
T&E	THREATENED & ENDANGERED SPECIES
HAZ	HAZARDOUS WASTE AREA
AG	AGRICULTURAL LAND
HABITAT	FISH & WILDLIFE HABITAT
FLOOD PLAIN	FLOOD PLAIN
OHW	ORDINARY HIGH WATER (OHW)
	STORM WATER
	USDA FOREST SERVICE LANDS
	WILDLIFE HABITAT SUIT/CONN

ARCHEOLOGICAL & HISTORIC

ARCH	ARCHEOLOGICAL BOUNDARY
HISTORIC DIST	HISTORIC DISTRICT BOUNDARY
HISTORIC	HISTORIC AREA
H	HISTORIC STRUCTURE

CONVENTIONAL TOPOGRAPHIC SYMBOLOGY

EXISTING FEATURES

	ROAD EDGE PAVEMENT
	ROAD EDGE GRAVEL
	DRIVEWAY EDGE
	DITCH
	FOUNDATION
	FENCE (EXISTING)
	FENCE WOOD POST
	FENCE STEEL POST
	GARDEN
	ROAD GUARDRAIL
	RAILROAD TRACKS
	CULVERT (EXISTING)
	STONE WALL
	WALL
	WOOD LINE
	BRUSH LINE
	HEDGE
	BODY OF WATER EDGE
	LEDGE EXPOSED

PROJECT NAME: CITY OF BURLINGTON
PROJECT NUMBER: 195311541

FILE NAME: 11541frm.dgn
PROJECT LEADER: VTRANS
DESIGNED BY: VTRANS
CONVENTIONAL SYMBOLOGY - LEGEND

PLOT DATE: 6/29/2018
DRAWN BY: VTRANS
CHECKED BY: VTRANS
SHEET 2 OF 91

TYPICAL SECTIONS

1½" SUPERPAVE BITUMINOUS CONCRETE PAVEMENT, (TYPE IVS), (SINGLE LIFT) TOP COURSE
5" SUPERPAVE BITUMINOUS CONCRETE PAVEMENT, (TYPE IIS), (TWO EQUAL LIFTS) BOTTOM COURSE
12" SUBBASE OF CRUSHED GRAVEL, FINE GRADED
24" SUBBASE OF DENSE GRADED CRUSHED STONE

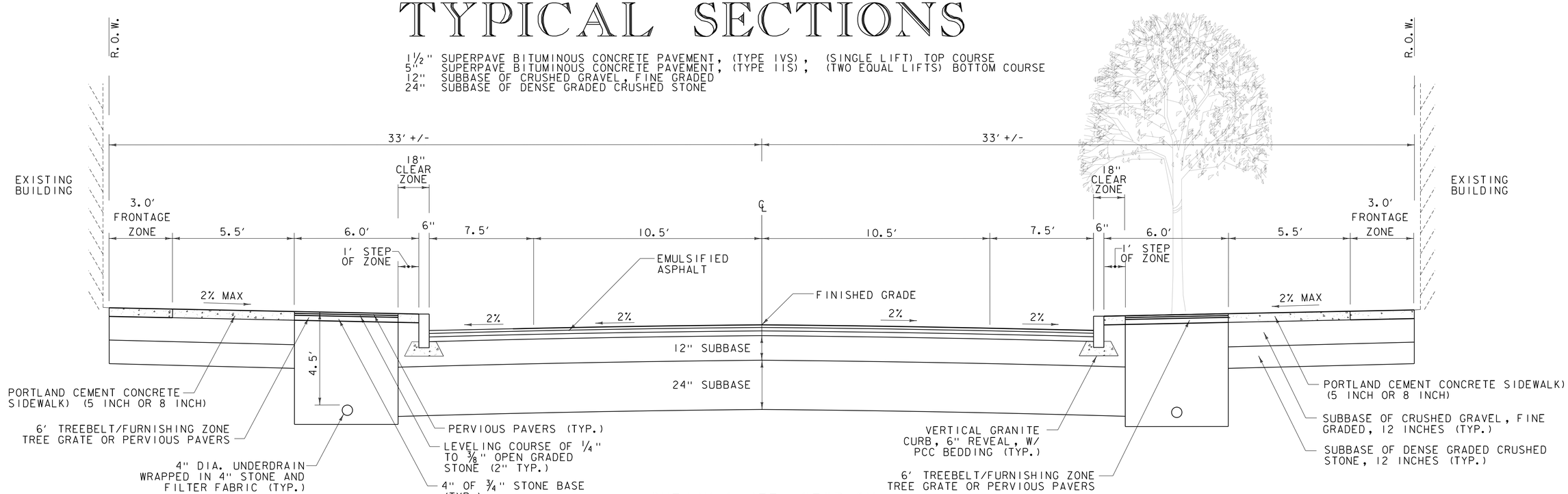

CHERRY STREET SECTION
NOT TO SCALE

BANKING TABLE (BANK STREET)

STA	LT CROSS SLOPE	RT CROSS SLOPE
50+15.0	2.0%	-2.0%
52+75.0	2.0%	-2.0%
53+50.0	-2.0%	-2.0%
57+82.0	-2.0%	-2.0%

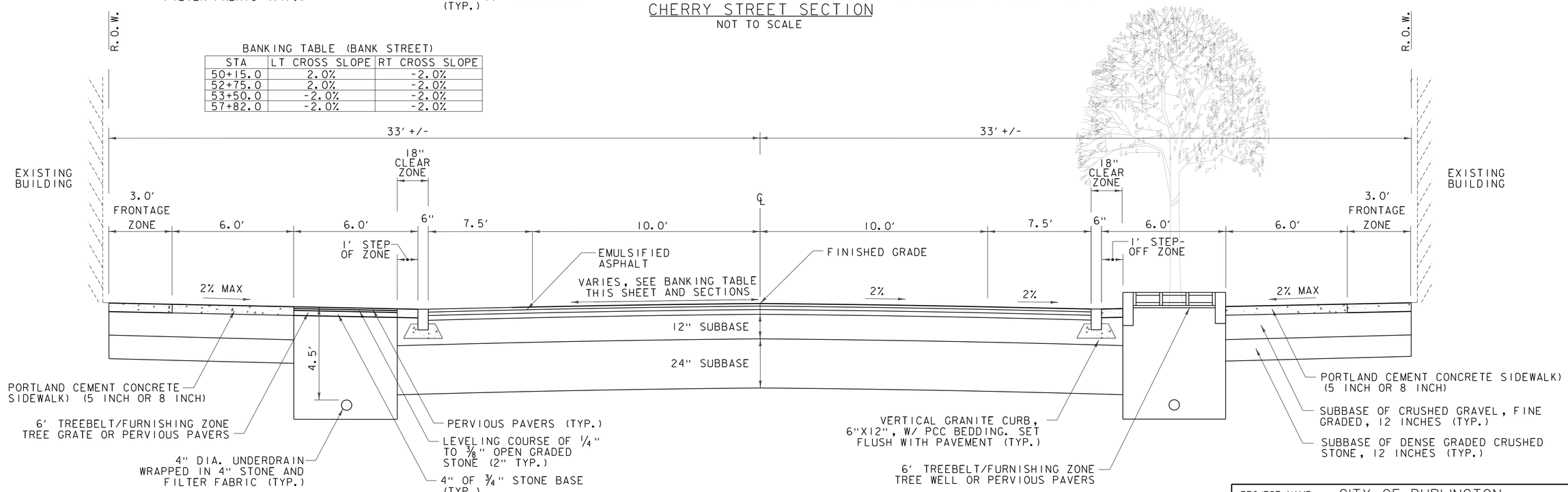

BANK STREET SECTION
NOT TO SCALE

Stantec

PROJECT NAME: CITY OF BURLINGTON	
PROJECT NUMBER: 195311541	
FILE NAME: 11541typ.dgn	PLOT DATE: 6/29/2018
PROJECT LEADER: G. EDWARDS	DRAWN BY: G. MERKLE
DESIGNED BY: K. RICHARDSON	CHECKED BY: G. GOYETTE
TYPICAL SHEET 1	SHEET 3 OF 91

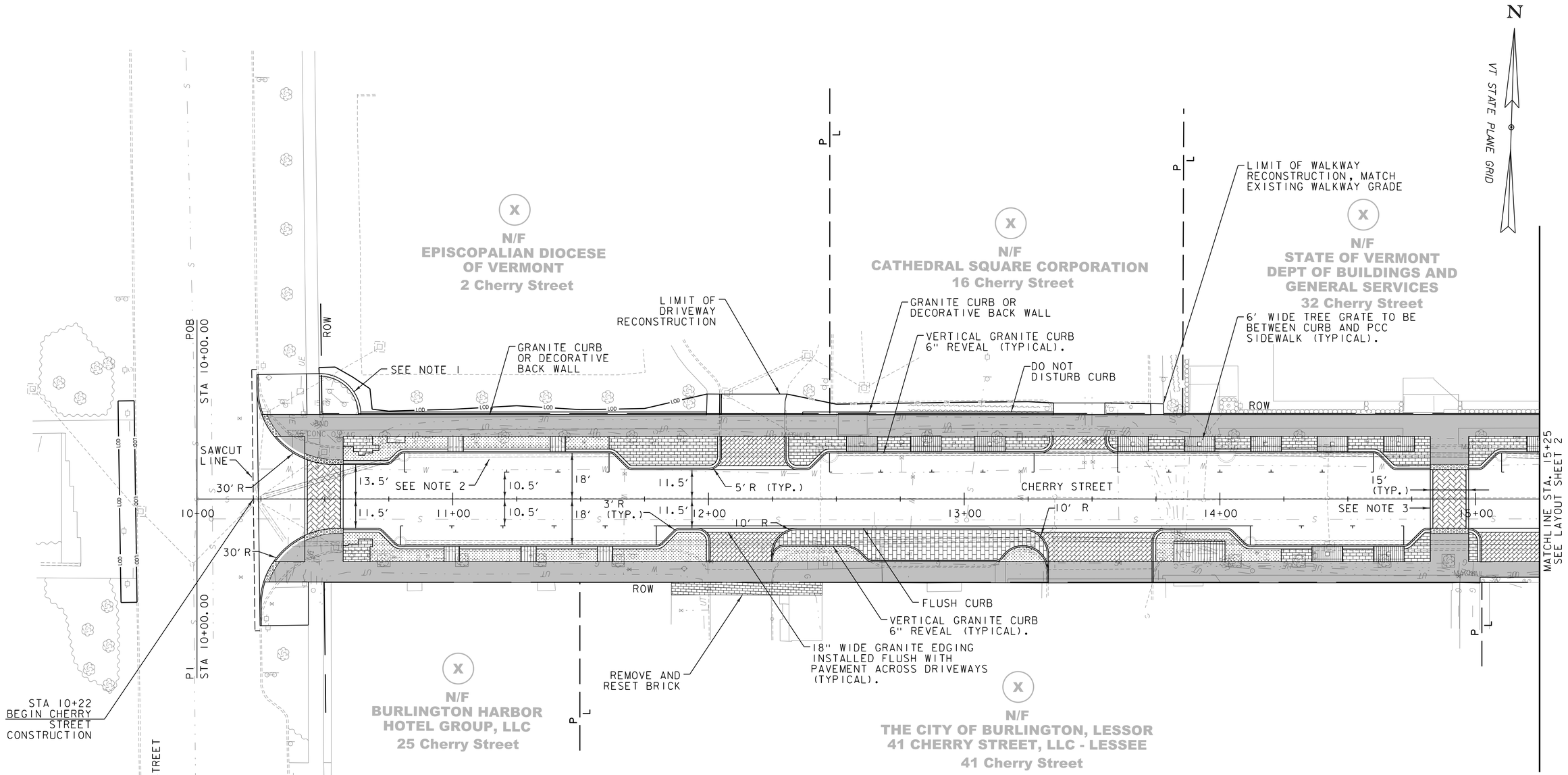

LEGEND

- NON-PERVIOUS PAVERS (HERRINGBONE PATTERN)
- PCC SIDEWALK
- NON-PERVIOUS CROSSWALK PAVERS (HERRINGBONE PATTERN)
- PERVIOUS TREEBELT PAVERS (SOLDIER PATTERN)
- TREE GRATE
- LOD — LIMITS OF DISTURBANCE
- RAIN GARDEN/LANDSCAPING
- PLANK WALKWAY/PATIO AREA
- NON-PERVIOUS DRIVEWAY PAVERS (HERRINGBONE PATTERN)
- ACCESSIBLE PARKING SPOT WITH RAMP UP TO SIDEWALK

NOTES

1. RETAINING WALL (30" MAX. HEIGHT).
2. 7.5' x 20' PARKING SPOTS (TYPICAL).
3. BRICK PAVER CROSSWALK WITH 12" WIDE GRANITE EDGING (TYPICAL).
4. BRICK PAVER MATERIALS, COLORS, AND PATTERNS TO BE DEFINED FOR 60% PLAN SUBMISSION.

0 20 40
SCALE

Stantec

PROJECT NAME: CITY OF BURLINGTON	
PROJECT NUMBER: 195311541	
FILE NAME: 11541bdr_layouts.dgn	PLOT DATE: 6/29/2018
PROJECT LEADER: G. EDWARDS	DRAWN BY: G. MERKLE
DESIGNED BY: K. RICHARDSON	CHECKED BY: G. GOYETTE
LAYOUT SHEET 1	SHEET 4 OF 91

CURVE DATA

PINE STREET
CURVE #4
Δ = 14°37'08"RT
D = 28°38'52"
R = 200'
T = 25.65'
L = 51.03'
E = 1.64'

PINE STREET
CURVE #5
Δ = 14°43'52"LT
D = 28°38'52"
R = 200'
T = 25.85'
L = 51.42'
E = 1.66'

BEARING DATA
Ⓓ = N1°49'03"W
Ⓔ = N12°48'06"E
Ⓕ = N1°55'46"W

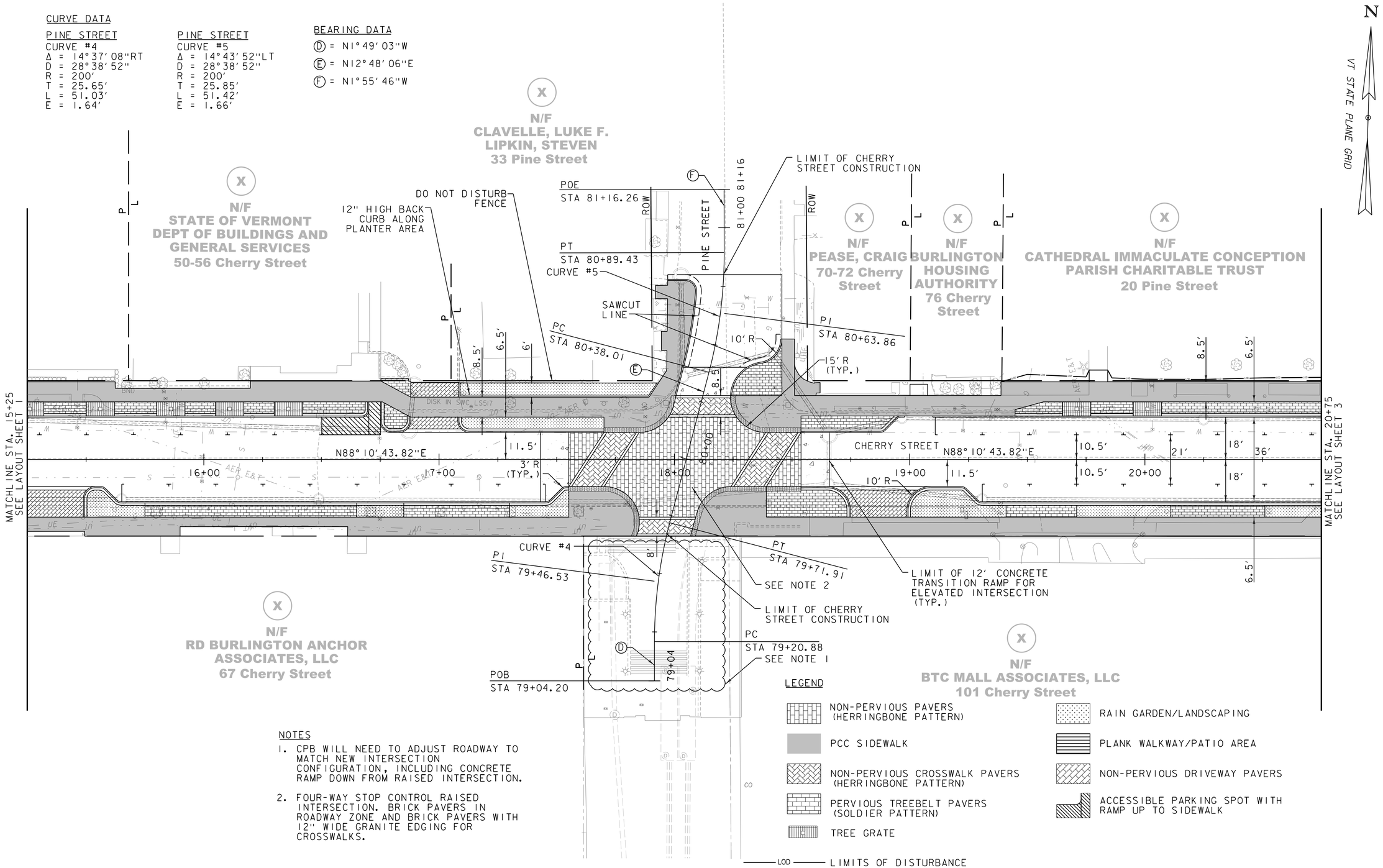

NOTES

1. CPB WILL NEED TO ADJUST ROADWAY TO MATCH NEW INTERSECTION CONFIGURATION, INCLUDING CONCRETE RAMP DOWN FROM RAISED INTERSECTION.
2. FOUR-WAY STOP CONTROL RAISED INTERSECTION. BRICK PAVERS IN ROADWAY ZONE AND BRICK PAVERS WITH 12" WIDE GRANITE EDGING FOR CROSSWALKS.

Stantec

PROJECT NAME: CITY OF BURLINGTON	
PROJECT NUMBER: 195311541	
FILE NAME: 1154lbdr_layouts.dgn	PLOT DATE: 6/29/2018
PROJECT LEADER: G. EDWARDS	DRAWN BY: G. MERKLE
DESIGNED BY: K. RICHARDSON	CHECKED BY: G. GOYETTE
LAYOUT SHEET 2	SHEET 5 OF 91

LEGEND

- NON-PERVIOUS PAVERS (HERRINGBONE PATTERN)
- PCC SIDEWALK
- NON-PERVIOUS CROSSWALK PAVERS (HERRINGBONE PATTERN)
- PERVIOUS TREEBELT PAVERS (SOLDIER PATTERN)
- TREE GRATE
- RAIN GARDEN/LANDSCAPING
- PLANK WALKWAY/PATIO AREA
- NON-PERVIOUS DRIVEWAY PAVERS
- ACCESSIBLE PARKING SPOT WITH RAMP UP TO SIDEWALK
- LOD — LIMITS OF DISTURBANCE

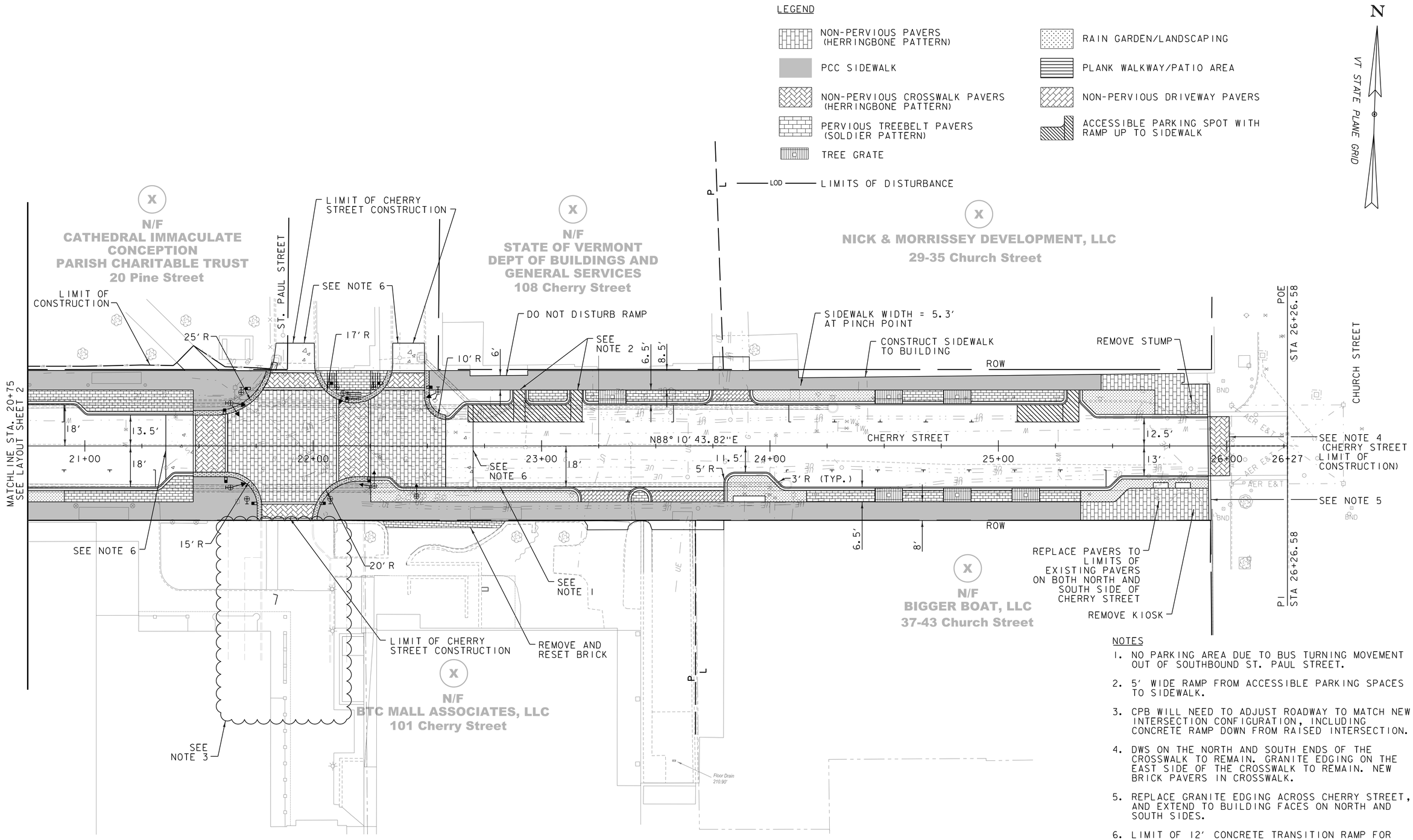

NOTES

1. NO PARKING AREA DUE TO BUS TURNING MOVEMENT OUT OF SOUTHBOUND ST. PAUL STREET.
2. 5' WIDE RAMP FROM ACCESSIBLE PARKING SPACES TO SIDEWALK.
3. CPB WILL NEED TO ADJUST ROADWAY TO MATCH NEW INTERSECTION CONFIGURATION, INCLUDING CONCRETE RAMP DOWN FROM RAISED INTERSECTION.
4. DWS ON THE NORTH AND SOUTH ENDS OF THE CROSSWALK TO REMAIN. GRANITE EDGING ON THE EAST SIDE OF THE CROSSWALK TO REMAIN. NEW BRICK PAVERS IN CROSSWALK.
5. REPLACE GRANITE EDGING ACROSS CHERRY STREET, AND EXTEND TO BUILDING FACES ON NORTH AND SOUTH SIDES.
6. LIMIT OF 12' CONCRETE TRANSITION RAMP FOR ELEVATED INTERSECTION.

0 20 40
SCALE

Stantec

PROJECT NAME: CITY OF BURLINGTON	
PROJECT NUMBER: 195311541	
FILE NAME: 1154lbdr_layouts.dgn	PLOT DATE: 6/29/2018
PROJECT LEADER: G. EDWARDS	DRAWN BY: G. MERKLE
DESIGNED BY: K. RICHARDSON	CHECKED BY: G. GOYETTE
LAYOUT SHEET 3	SHEET 6 OF 91

CURVE DATA

BANK STREET
CURVE #1
Δ = 33°07′42"RT
D = 143°14′22"
R = 40′
T = 11.90′
L = 23.13′
E = 1.73′

PINE STREET
CURVE #2
Δ = 34°29′08"LT
D = 63°39′43"
R = 90′
T = 27.93′
L = 54.17′
E = 4.24′

PINE STREET
CURVE #3
Δ = 33°38′58"RT
D = 63°39′43"
R = 90′
T = 27.22′
L = 52.86′
E = 4.02′

BEARING DATA

Ⓐ = N2°17′12"W

Ⓑ = N54°34′58"E

Ⓒ = N1°27′02"W

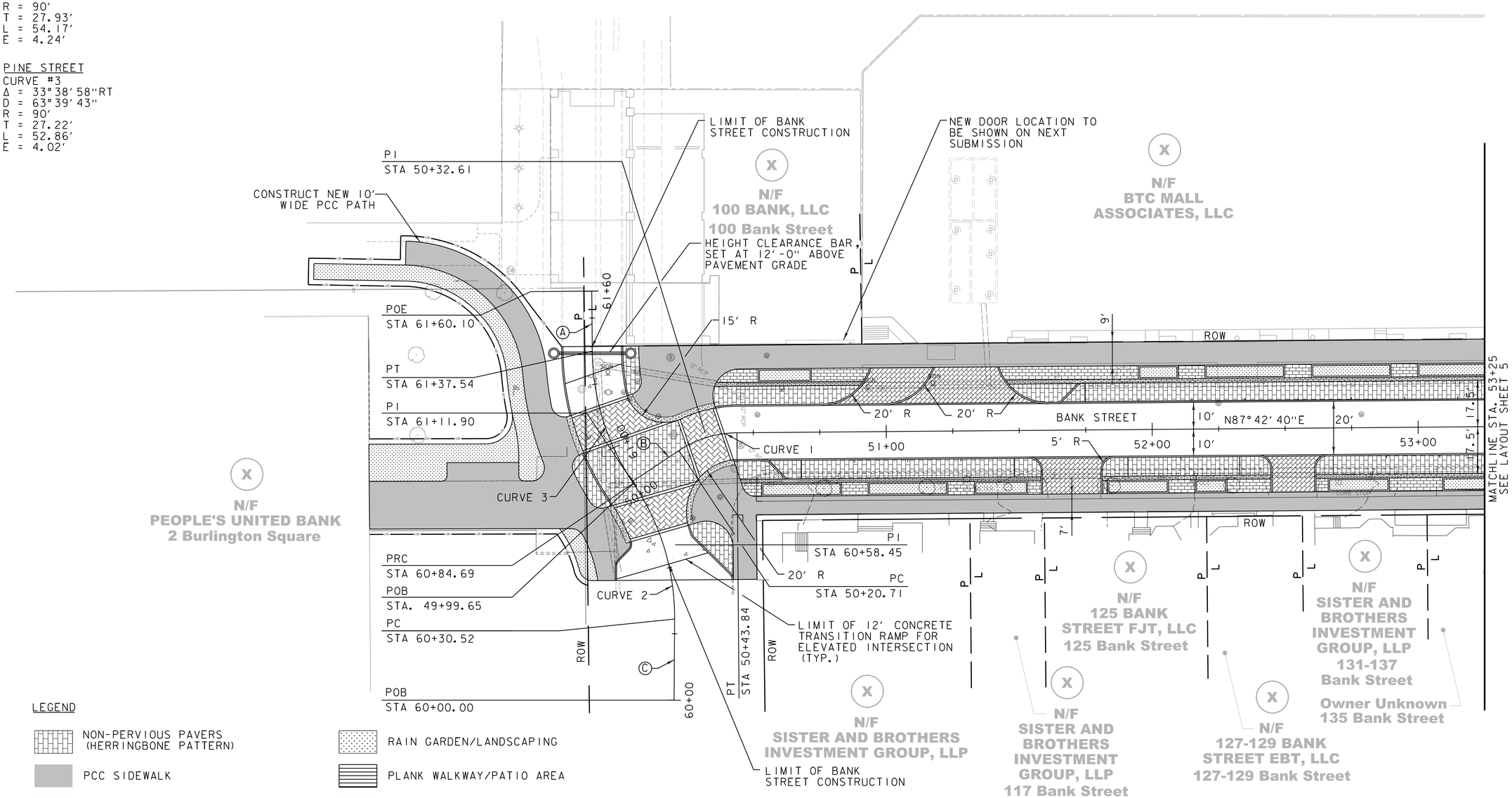

LEGEND

- NON-PERVIOUS PAVERS (HERRINGBONE PATTERN)
- PCC SIDEWALK
- NON-PERVIOUS CROSSWALK PAVERS (HERRINGBONE PATTERN)
- PERVIOUS TREEBELT PAVERS (SOLDIER PATTERN)
- TREE GRATE
- LOD — LIMITS OF DISTURBANCE
- RAIN GARDEN/LANDSCAPING
- PLANK WALKWAY/PATIO AREA
- NON-PERVIOUS DRIVEWAY PAVERS
- ACCESSIBLE PARKING SPOT WITH RAMP UP TO SIDEWALK

0 20 40
SCALE

Stantec

PROJECT NAME: CITY OF BURLINGTON	
PROJECT NUMBER: 195311541	
FILE NAME: 11541bdr_layouts.dgn	PLOT DATE: 6/29/2018
PROJECT LEADER: G. EDWARDS	DRAWN BY: G. MERKLE
DESIGNED BY: K. RICHARDSON	CHECKED BY: G. GOYETTE
LAYOUT SHEET 4	SHEET 7 OF 91

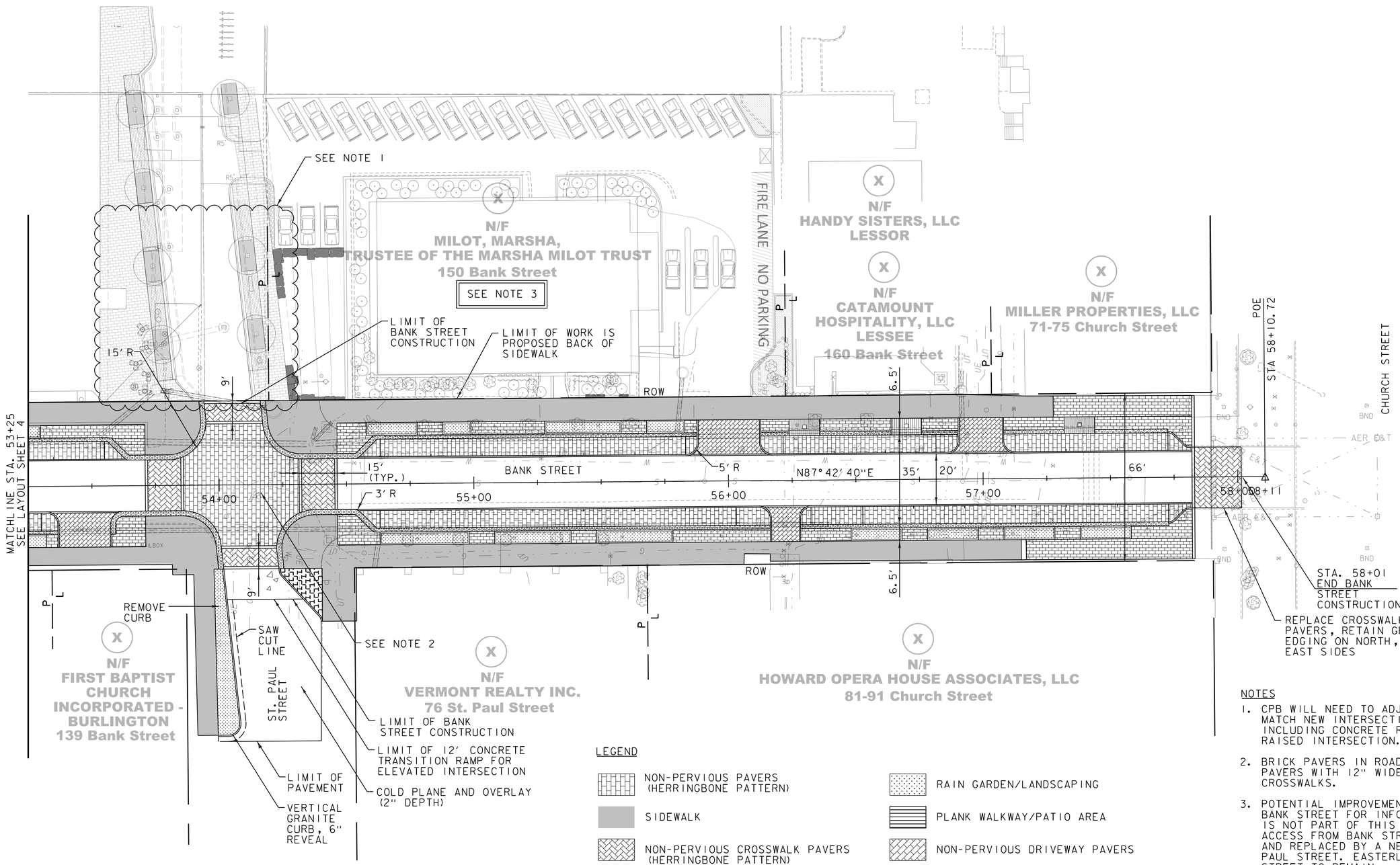

LEGEND

- NON-PERVIOUS PAVERS (HERRINGBONE PATTERN)
- SIDEWALK
- NON-PERVIOUS CROSSWALK PAVERS (HERRINGBONE PATTERN)
- PERVIOUS TREEBELT PAVERS (SOLDIER PATTERN)
- TREE GRATE
- LOD — LIMITS OF DISTURBANCE
- RAIN GARDEN/LANDSCAPING
- PLANK WALKWAY/PATIO AREA
- NON-PERVIOUS DRIVEWAY PAVERS
- ACCESSIBLE PARKING SPOT WITH RAMP UP TO SIDEWALK

0 20 40
SCALE

Stantec

NOTES

1. CPB WILL NEED TO ADJUST ROADWAY TO MATCH NEW INTERSECTION CONFIGURATION, INCLUDING CONCRETE RAMP DOWN FROM RAISED INTERSECTION.
2. BRICK PAVERS IN ROADWAY ZONE AND BRICK PAVERS WITH 12" WIDE GRANITE EDGING CROSSWALKS.
3. POTENTIAL IMPROVEMENTS SHOWN ON 150 BANK STREET FOR INFORMATION ONLY AND IS NOT PART OF THIS CONTRACT. WESTERLY ACCESS FROM BANK STREET TO ELIMINATED AND REPLACED BY A NEW ACCESS FROM ST. PAUL STREET. EASTERLY ACCESS ON BANK STREET TO REMAIN.

PROJECT NAME: CITY OF BURLINGTON
PROJECT NUMBER: 195311541

FILE NAME: 1154lbdr_layouts.dgn
PROJECT LEADER: G. EDWARDS
DESIGNED BY: K. RICHARDSON
LAYOUT SHEET 5

PLOT DATE: 6/29/2018
DRAWN BY: G. MERKLE
CHECKED BY: G. GOYETTE
SHEET 8 OF 91

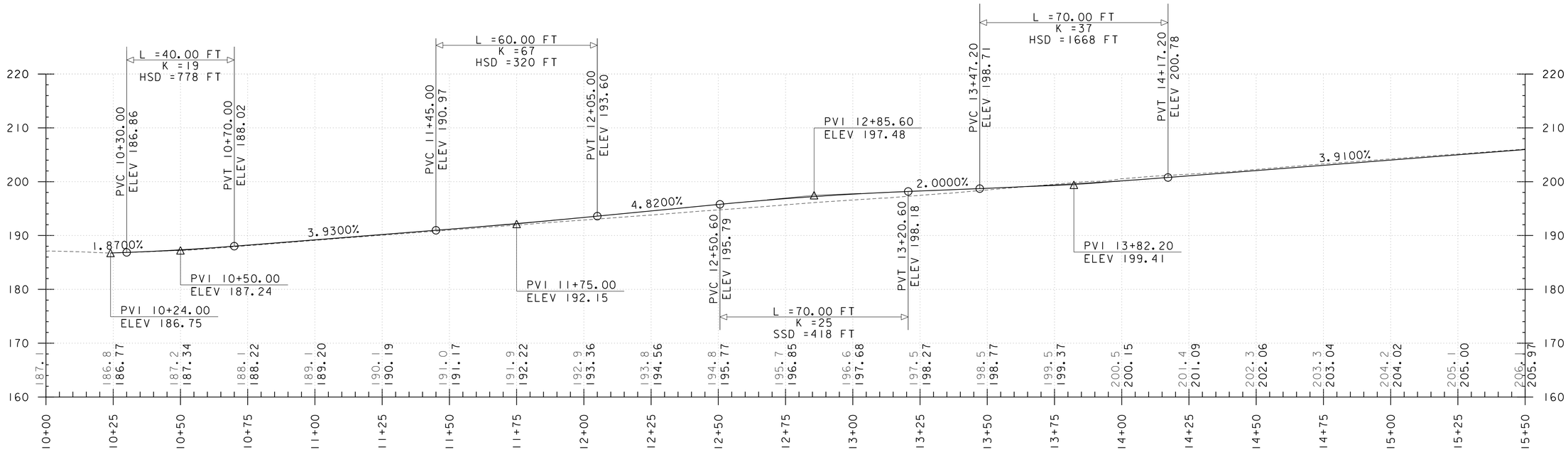

CHERRY STREET (STA. 10+00 TO 15+50)

HORIZONTAL SCALE: 1"=10'
VERTICAL SCALE: 1"=20'

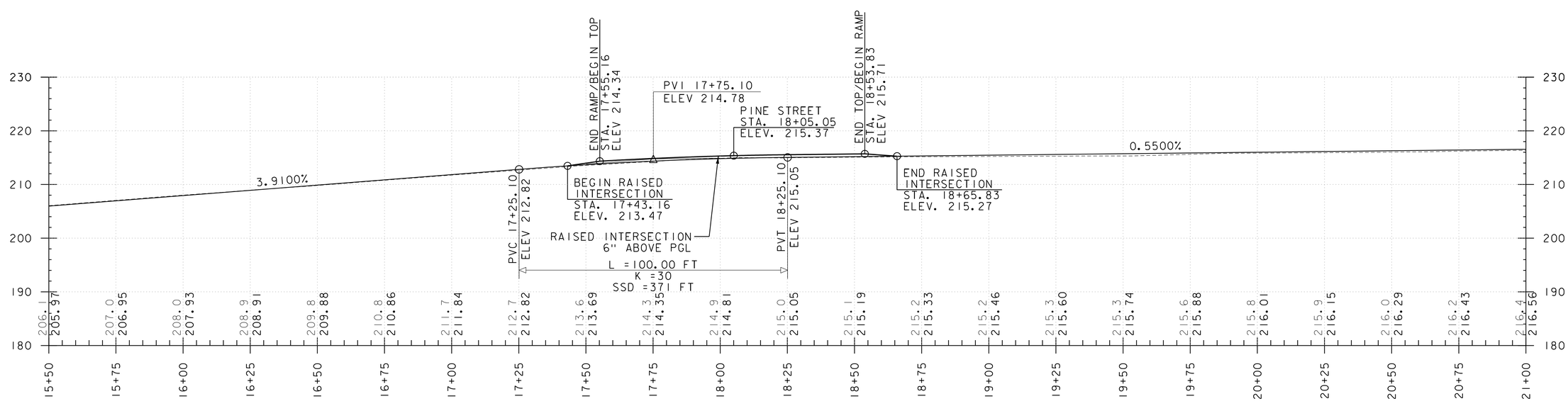

CHERRY STREET (STA. 15+50 TO 21+00)

HORIZONTAL SCALE: 1"=10'
VERTICAL SCALE: 1"=20'

NOTE: GRADES SHOWN TO THE NEAREST TENTH OF A FOOT ARE EXISTING GROUND

GRADES SHOWN TO THE NEAREST HUNDREDTH OF A FOOT ARE PROFILE GRADE LINE (PGL) ELEVATIONS

Stantec

PROJECT NAME: CITY OF BURLINGTON	
PROJECT NUMBER: 195311541	
FILE NAME: 11541pro.dgn	PLOT DATE: 6/29/2018
PROJECT LEADER: G. EDWARDS	DRAWN BY: G. MERKLE
DESIGNED BY: C. GENDRON	CHECKED BY: K. RICHARDSON
PROFILE SHEET 1	SHEET 9 OF 91

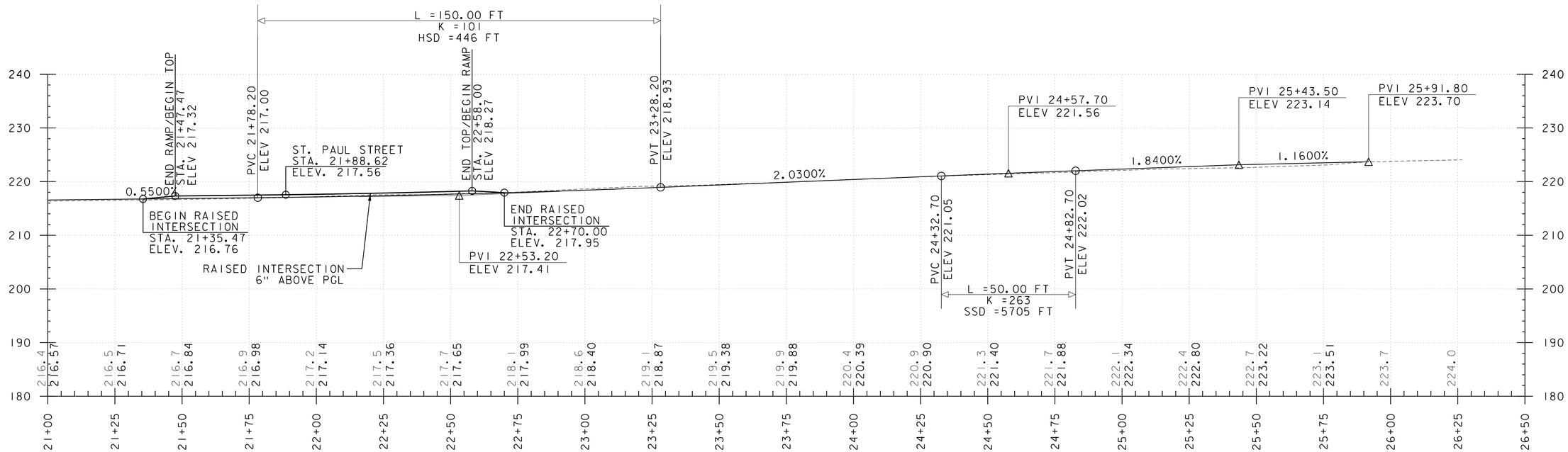

CHERRY STREET (STA. 21+00 TO 26+50)

HORIZONTAL SCALE: 1"=10'
VERTICAL SCALE: 1"=20'

NOTE: GRADES SHOWN TO THE NEAREST TENTH OF A FOOT ARE EXISTING GROUND

GRADES SHOWN TO THE NEAREST HUNDREDTH OF A FOOT ARE PROFILE GRADE LINE (PGL) ELEVATIONS

Stantec

PROJECT NAME: CITY OF BURLINGTON	
PROJECT NUMBER: 195311541	
FILE NAME: 11541pro.dgn	PLOT DATE: 6/29/2018
PROJECT LEADER: G. EDWARDS	DRAWN BY: G. MERKLE
DESIGNED BY: C. GENDRON	CHECKED BY: K. RICHARDSON
PROFILE SHEET 2	SHEET 10 OF 91

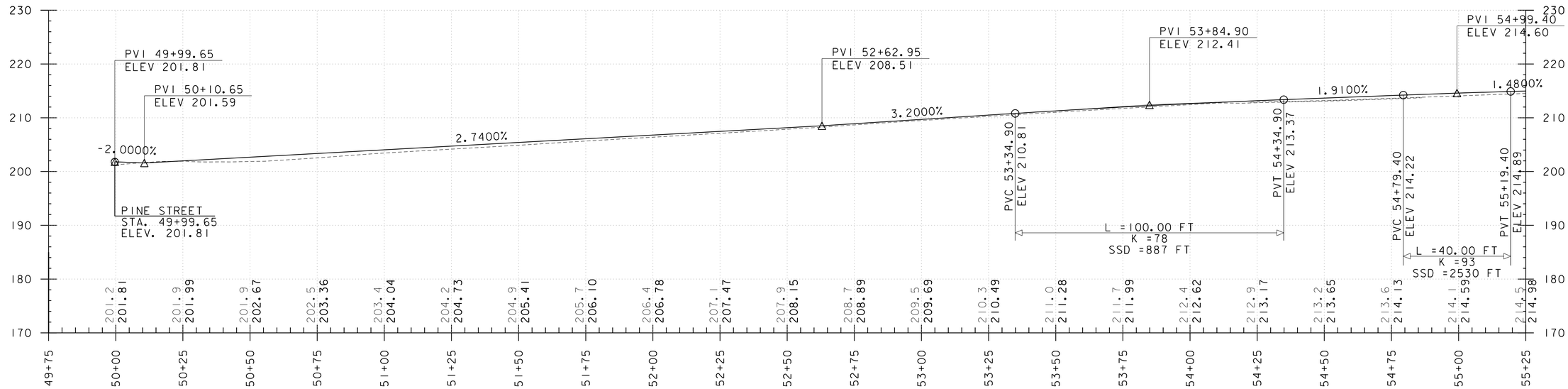

BANK STREET (49+75 TO 55+25)
HORIZONTAL SCALE: 1"=10'
VERTICAL SCALE: 1"=20'

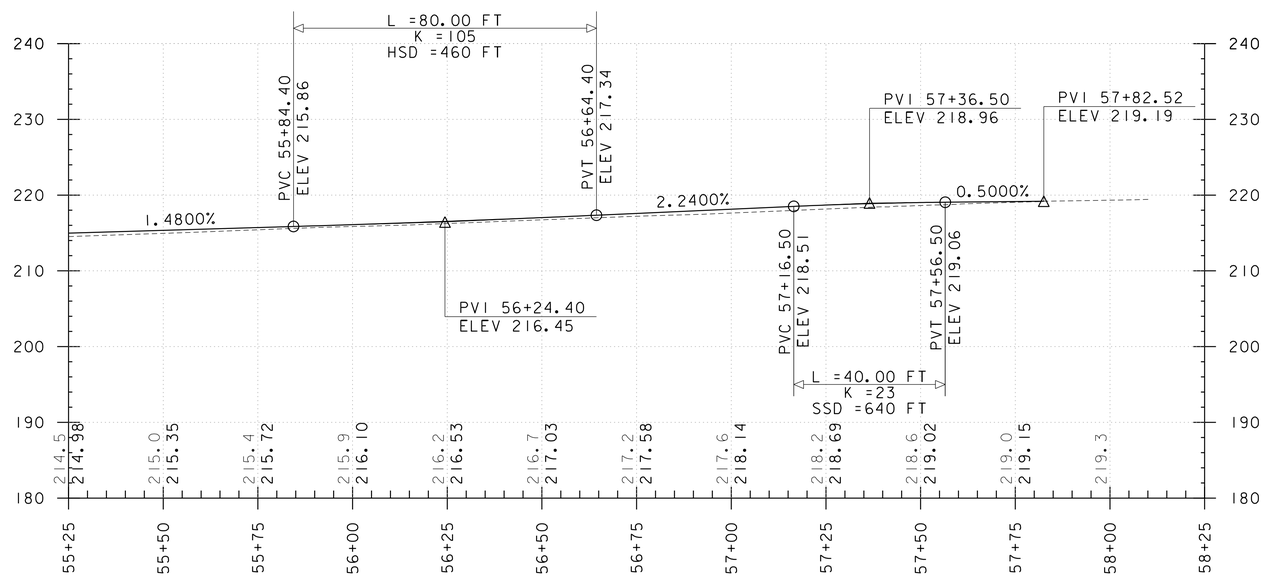

BANK STREET (55+25 TO 58+25)
HORIZONTAL SCALE: 1"=10'
VERTICAL SCALE: 1"=20'

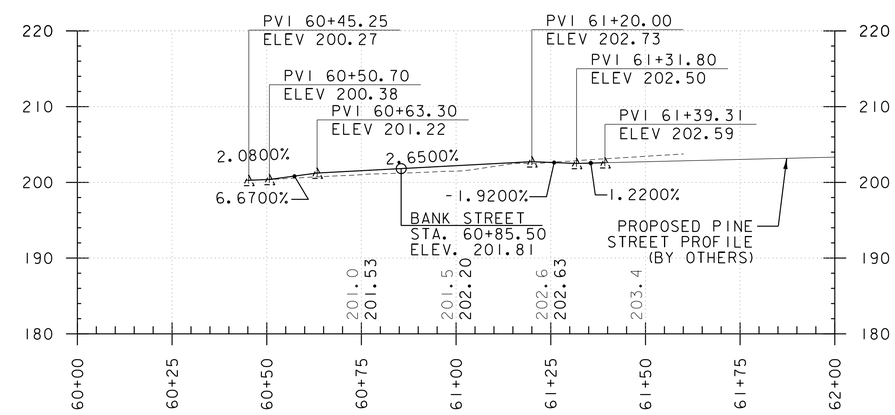

PINE STREET (AT BANK)
HORIZONTAL SCALE: 1"=10'
VERTICAL SCALE: 1"=20'

NOTE: GRADES SHOWN TO THE NEAREST TENTH OF A FOOT ARE EXISTING GROUND

GRADES SHOWN TO THE NEAREST HUNDREDTH OF A FOOT ARE PROFILE GRADE LINE (PGL) ELEVATIONS

Stantec

PROJECT NAME: CITY OF BURLINGTON	
PROJECT NUMBER: 195311541	
FILE NAME: 11541pro.dgn	PLOT DATE: 6/29/2018
PROJECT LEADER: G. EDWARDS	DRAWN BY: G. MERKLE
DESIGNED BY: C. GENDRON	CHECKED BY: K. RICHARDSON
PROFILE SHEET 2	SHEET 11 OF 91

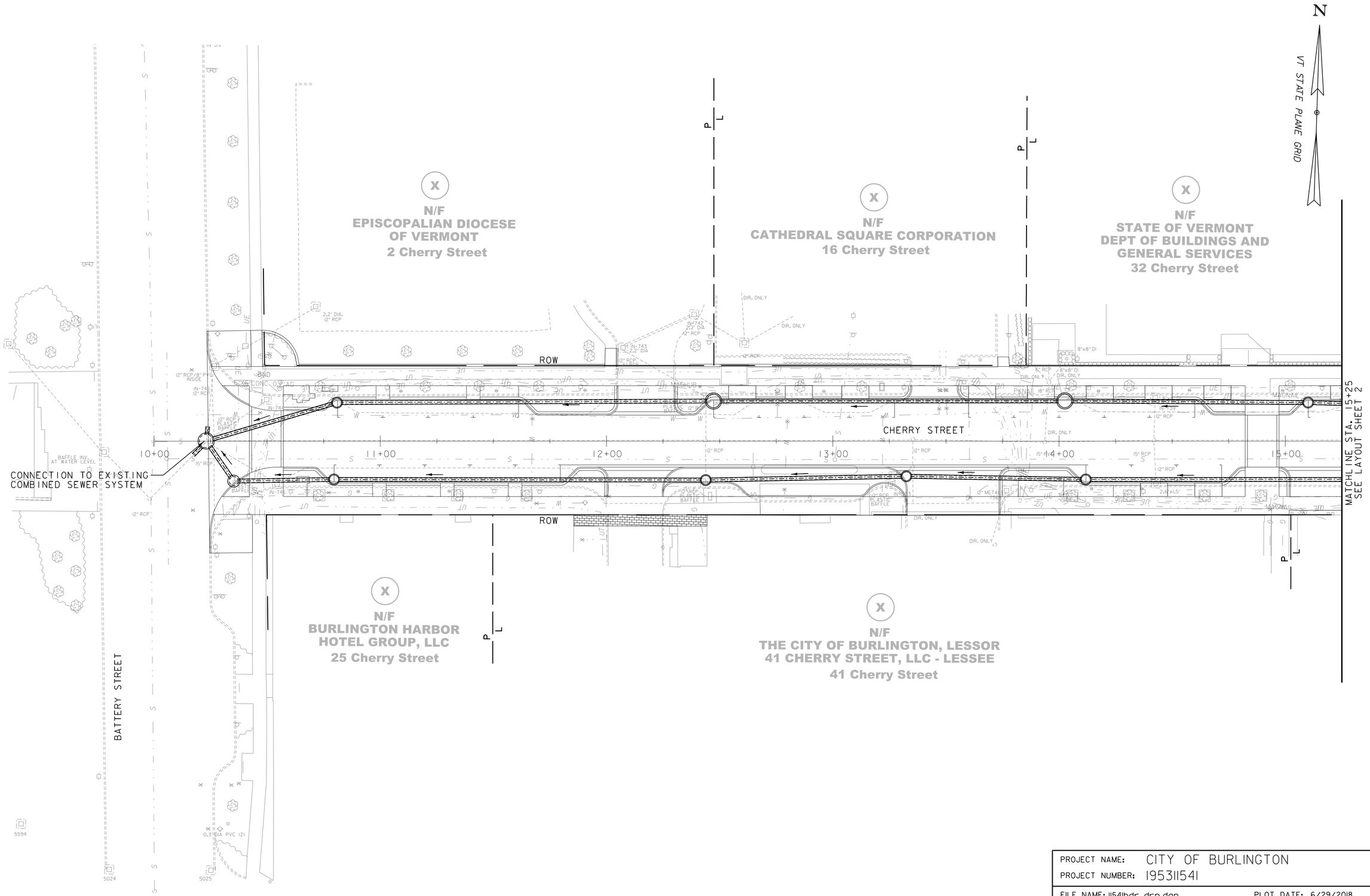

0 20 40
SCALE

Stantec

PROJECT NAME: CITY OF BURLINGTON	
PROJECT NUMBER: 195311541	
FILE NAME: 1154lbdr_drn.dgn	PLOT DATE: 6/29/2018
PROJECT LEADER: G. EDWARDS	DRAWN BY: G. MERKLE
DESIGNED BY: K. RICHARDSON	CHECKED BY: G. GOYETTE
DRAINAGE SHEET 1	SHEET 12 OF 91

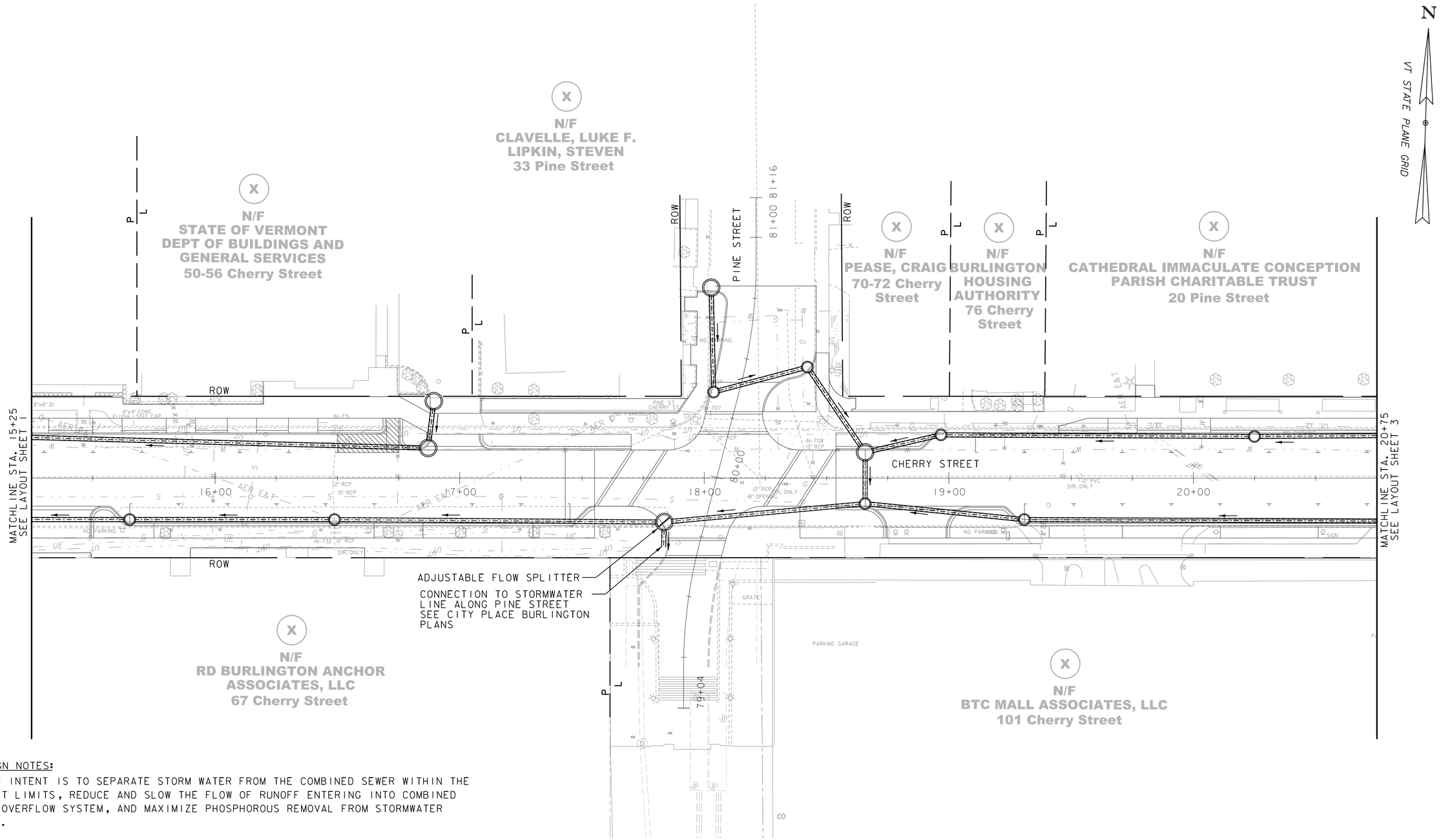

30% DESIGN NOTES:

1. DESIGN INTENT IS TO SEPARATE STORM WATER FROM THE COMBINED SEWER WITHIN THE PROJECT LIMITS, REDUCE AND SLOW THE FLOW OF RUNOFF ENTERING INTO COMBINED SEWER OVERFLOW SYSTEM, AND MAXIMIZE PHOSPHOROUS REMOVAL FROM STORMWATER RUNOFF.

2. ADJUSTABLE FLOW SPLITTER TO BE INSTALLED AT INTERSECTION OF PINE AND CHERRY STREET. FLOW SPLITTER WILL DIVERT UPSTREAM RUNOFF FROM PINE AND CHERRY STREETS INTO NEW STORM PIPE THAT WILL BE INSTALLED ALONG THE NEW PINE STREET CONNECTION BY THE CPB DEVELOPMENT PROJECT. AMOUNT OF RUNOFF DIVERTED WILL BE DETERMINED DURING 60% DESIGN. THE INTENT IS TO DIVERT AS MUCH RUNOFF AS POSSIBLE WITHOUT OVERWHELMING THE DOWNSTREAM STORM SYSTEM THAT DISCHARGES AT THE COLLEGE STREET OUTFALL. RUNOFF EXCEEDING THIS AMOUNT WILL FLOW OVER ADJUSTABLE SPLITTER AND INTO NEW CHERRY STREET STORM SYSTEM WEST OF INTERSECTION. THE NEW CHERRY STREET STORM SYSTEM WILL CONNECT BACK INTO THE CSO AT BATTERY STREET. ADJUSTABLE FLOW SPLITTER WILL ALLOW CITY TO ADJUST AMOUNT OF RUNOFF DISCHARGING TO BATTERY STREET CSO OR TO COLLEGE STREET OUTFALL IF AND WHEN THIS INFRASTRUCTURE IS IMPROVED.

3. STORMWATER WITHIN PROJECT LIMITS WILL BE FILTERED THROUGH POROUS PAVERS, TREE CELLS, AND BIORETENTION AREAS WHERE PRACTICAL. STORMWATER WILL NOT BE INFILTRATED DUE TO THE POTENTIAL FOR WATER TO INFILTRATE INTO BASEMENTS OF NEARBY BUILDINGS. FILTERING OF RUNOFF WITHIN PROJECT LIMITS WILL REMOVE PHOSPHOROUS AND REDUCE AND SLOW FLOW OF RUNOFF INTO COMBINED SEWER SYSTEM ON BATTERY STREET AND STORMWATER OUTFALL ON COLLEGE STREET.

4. STORMWATER TREATMENT PRACTICES AND ADJUSTABLE FLOW SPLITTER DETAILS TO BE INCLUDED WITH 60% PLAN SUBMISSION.

0 20 40
SCALE

Stantec

PROJECT NAME: CITY OF BURLINGTON	
PROJECT NUMBER: 195311541	
FILE NAME: 1154lbdr_drn.dgn	PLOT DATE: 6/29/2018
PROJECT LEADER: G. EDWARDS	DRAWN BY: G. MERKLE
DESIGNED BY: K. RICHARDSON	CHECKED BY: G. GOYETTE
DRAINAGE SHEET 2	SHEET 13 OF 91

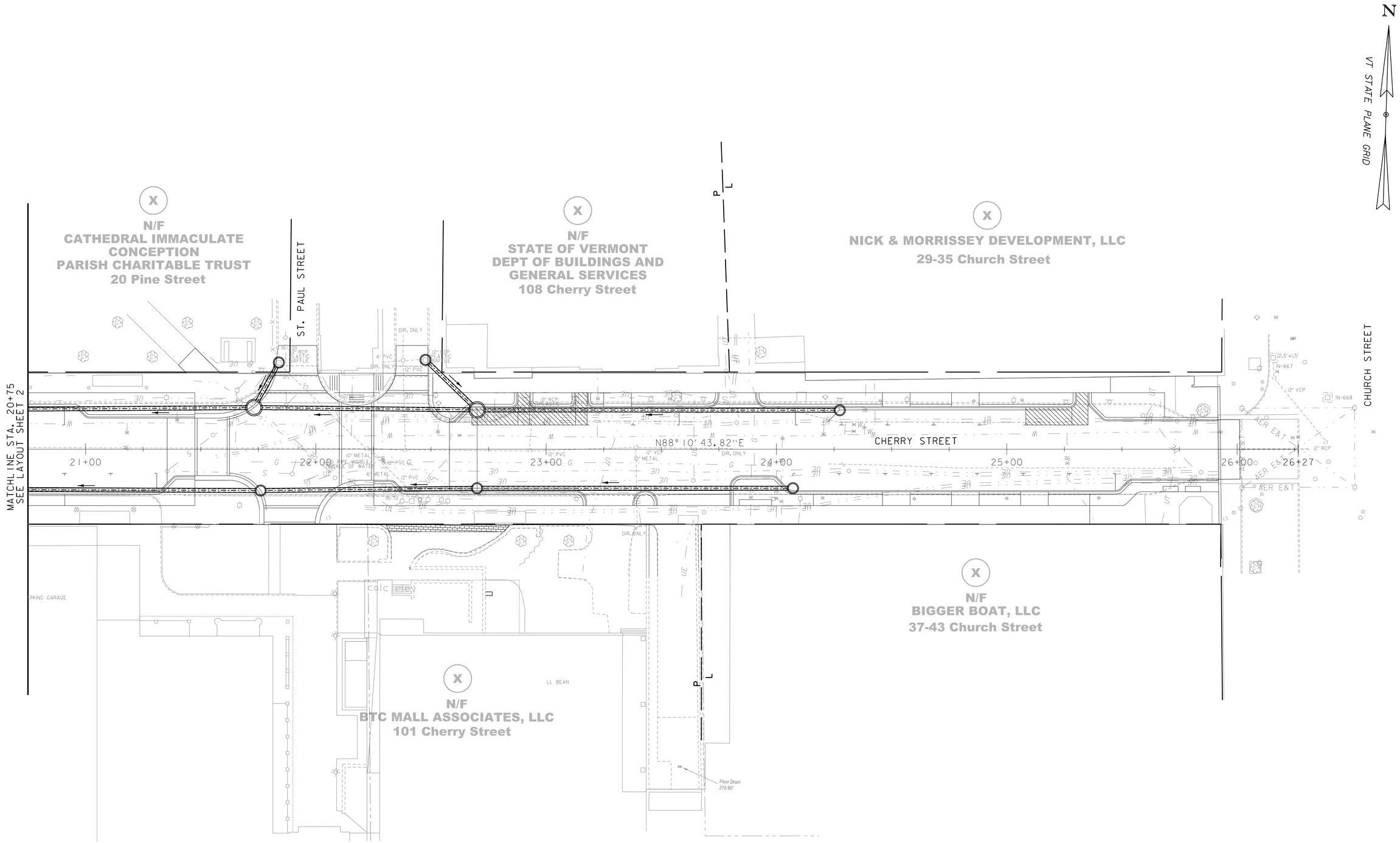

PROJECT NAME: CITY OF BURLINGTON	
PROJECT NUMBER: 195311541	
FILE NAME: 11541bdr_drn.dgn	PLOT DATE: 6/29/2018
PROJECT LEADER: G. EDWARDS	DRAWN BY: G. MERKLE
DESIGNED BY: K. RICHARDSON	CHECKED BY: G. GOYETTE
DRAINAGE SHEET 3	SHEET 14 OF 91

Stantec

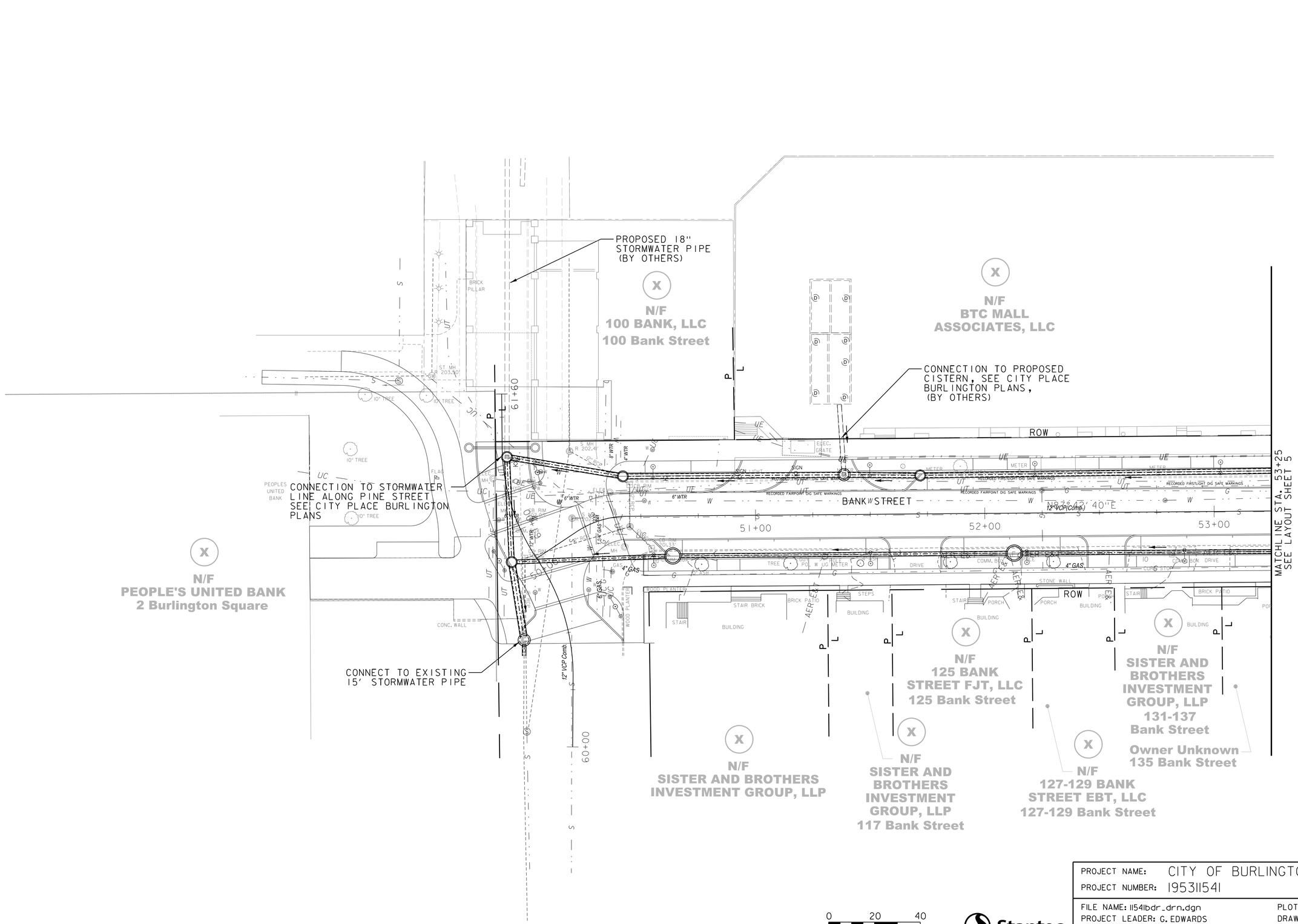

Stantec

PROJECT NAME: CITY OF BURLINGTON	
PROJECT NUMBER: 195311541	
FILE NAME: 1154lbdr_drn.dgn	PLOT DATE: 6/29/2018
PROJECT LEADER: G. EDWARDS	DRAWN BY: G. MERKLE
DESIGNED BY: K. RICHARDSON	CHECKED BY: G. GOYETTE
DRAINAGE SHEET 4	SHEET 15 OF 91

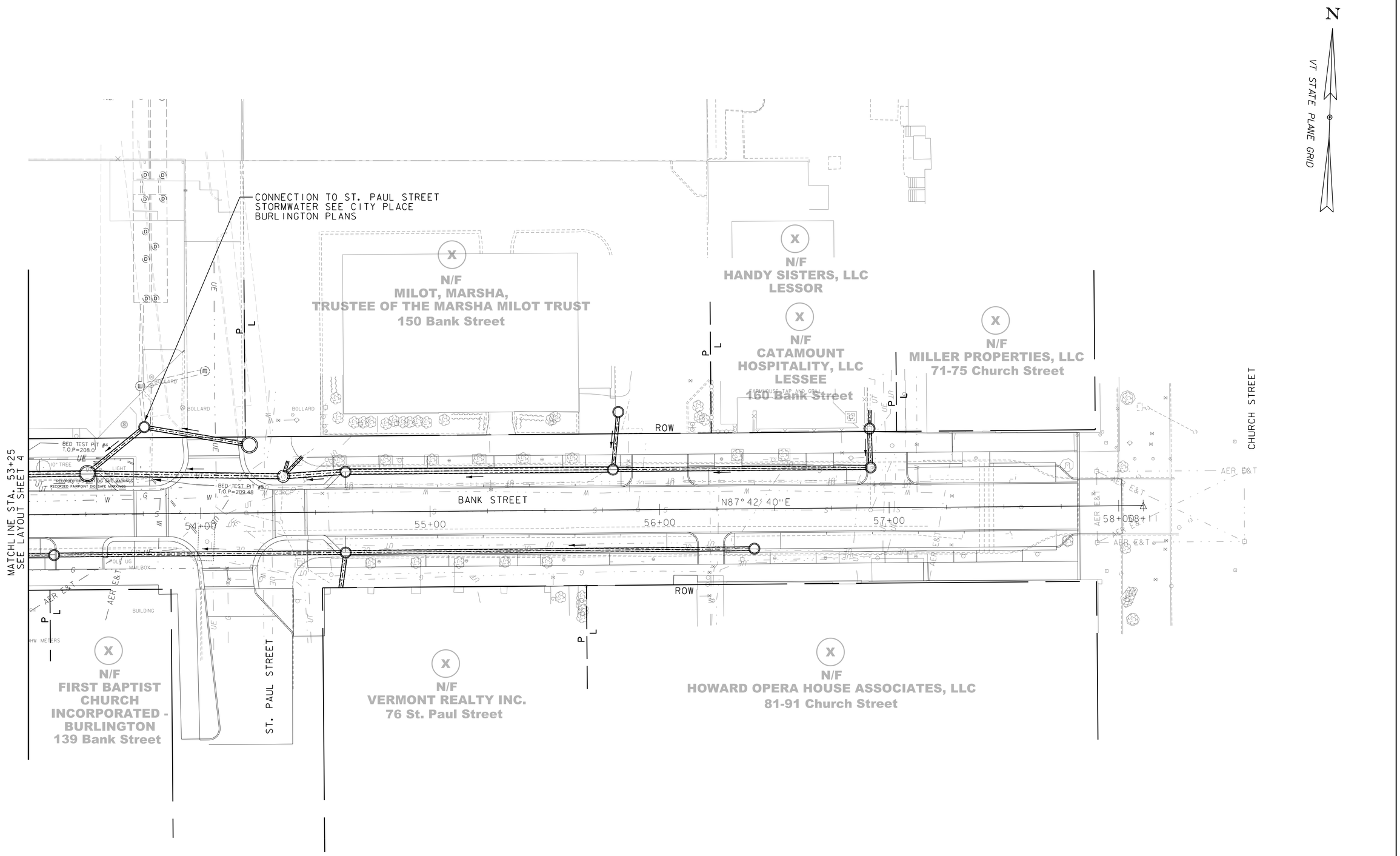

0 20 40
SCALE

Stantec

PROJECT NAME: CITY OF BURLINGTON	
PROJECT NUMBER: 195311541	
FILE NAME: 1154lbdr_drn.dgn	PLOT DATE: 6/29/2018
PROJECT LEADER: G. EDWARDS	DRAWN BY: G. MERKLE
DESIGNED BY: K. RICHARDSON	CHECKED BY: G. GOYETTE
DRAINAGE SHEET 5	SHEET 16 OF 91

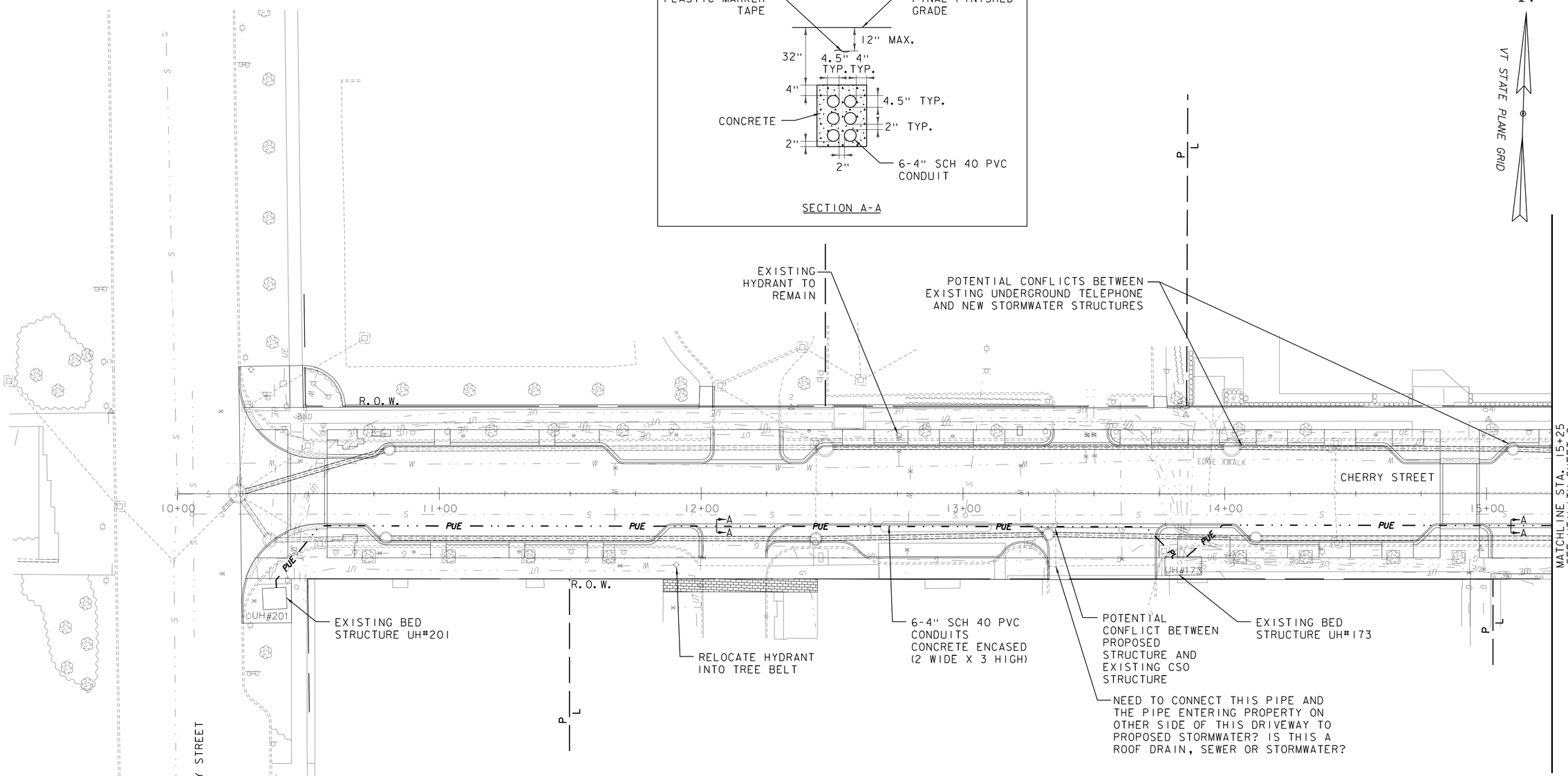

UTILITIES LEGEND

PUE	BURLINGTON ELECTRIC (PROPOSED)
PUT	COMMUNICATIONS (PROPOSED)
S	SEWER (EXISTING)
UT	BURLINGTON TELECOM (EXISTING)
W	WATER (EXISTING)
G	GAS (EXISTING)
UE	BURLINGTON ELECTRIC (EXISTING)

NOTES

1. ALL UTILITY WORK SHOWN AS "BY OTHERS" WILL BE UPDATED TO BE SHOWN AS EXISTING FOR FUTURE SUBMITTAL'S ONCE AS BUILT INFORMATION HAS BEEN RECEIVED.

2. POTENTIAL UTILITY CONFLICTS WILL BE IDENTIFIED DURING DEVELOPMENT OF 60% PLANS. POTHOLING TO DETERMINE LOCATION AND DEPTH OF EXISTING UTILITIES AT CONFLICT LOCATIONS WILL BE NECESSARY AND WILL BE COMPLETED DURING 60% PLAN DEVELOPMENT. PROPOSED RELOCATION ROUTING WILL BE INCLUDED IN 60% PLANS.

0 20 40
SCALE

Stantec

PROJECT NAME: CITY OF BURLINGTON
PROJECT NUMBER: 195311541

FILE NAME: 1154lbdr_utl.dgn
PROJECT LEADER: G. EDWARDS
DESIGNED BY: D. YOULEN
UTILITY SHEET 1

PLOT DATE: 6/29/2018
DRAWN BY: J. BURKE
CHECKED BY: G. GOYETTE
SHEET 17 OF 91

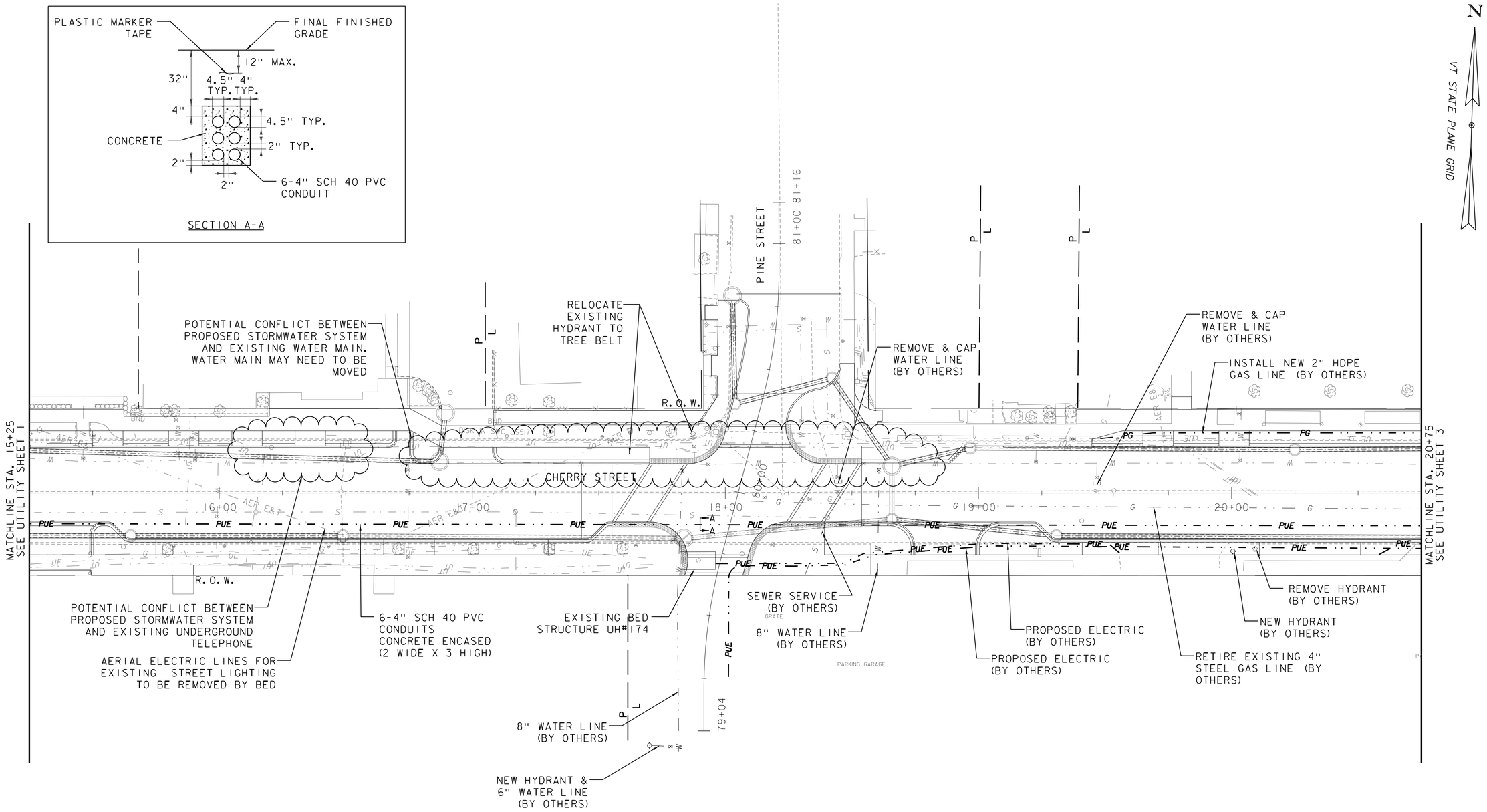

NOTES

1. ALL UTILITY WORK SHOWN AS "BY OTHERS" WILL BE UPDATED TO BE SHOWN AS EXISTING FOR FUTURE SUBMITTAL'S ONCE AS BUILT INFORMATION HAS BEEN RECEIVED.

0 20 40
SCALE

Stantec

PROJECT NAME: CITY OF BURLINGTON	
PROJECT NUMBER: 195311541	
FILE NAME: 11541bdr_util.dgn	PLOT DATE: 6/29/2018
PROJECT LEADER: G. EDWARDS	DRAWN BY: J. BURKE
DESIGNED BY: D. YOULEN	CHECKED BY: G. GOYETTE
UTILITY SHEET 2	SHEET 18 OF 91

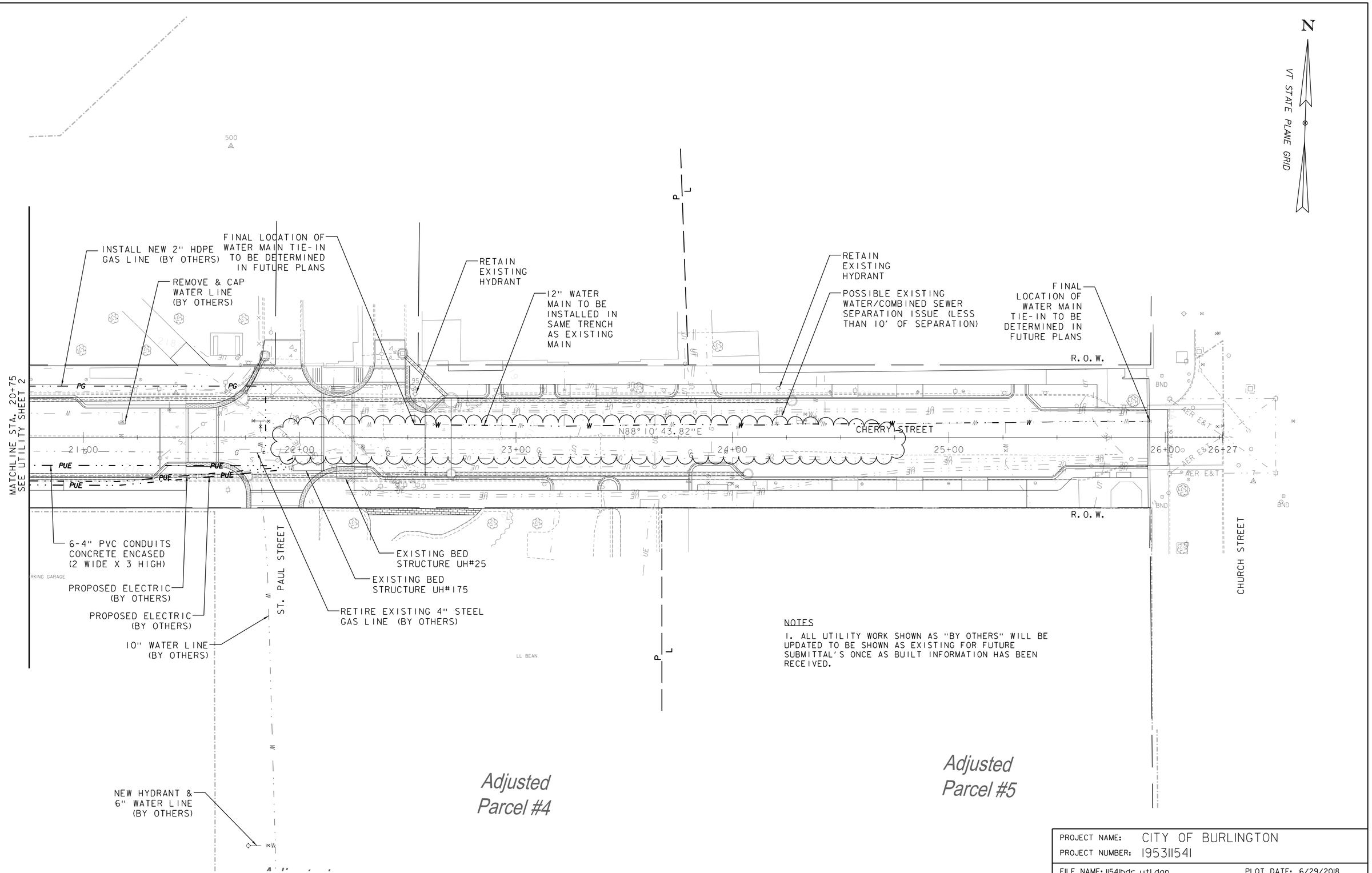

NOTES

1. ALL UTILITY WORK SHOWN AS "BY OTHERS" WILL BE UPDATED TO BE SHOWN AS EXISTING FOR FUTURE SUBMITTAL'S ONCE AS BUILT INFORMATION HAS BEEN RECEIVED.

Stantec

PROJECT NAME: CITY OF BURLINGTON	
PROJECT NUMBER: 195311541	
FILE NAME: 11541bdr_util.dgn	PLOT DATE: 6/29/2018
PROJECT LEADER: G. EDWARDS	DRAWN BY: J. BURKE
DESIGNED BY: D. YOULEN	CHECKED BY: G. GOYETTE
UTILITY SHEET 3	SHEET 19 OF 91

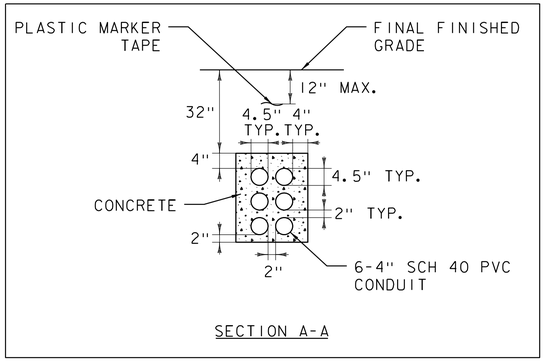

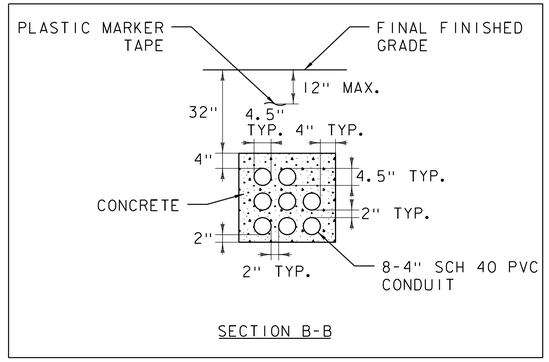

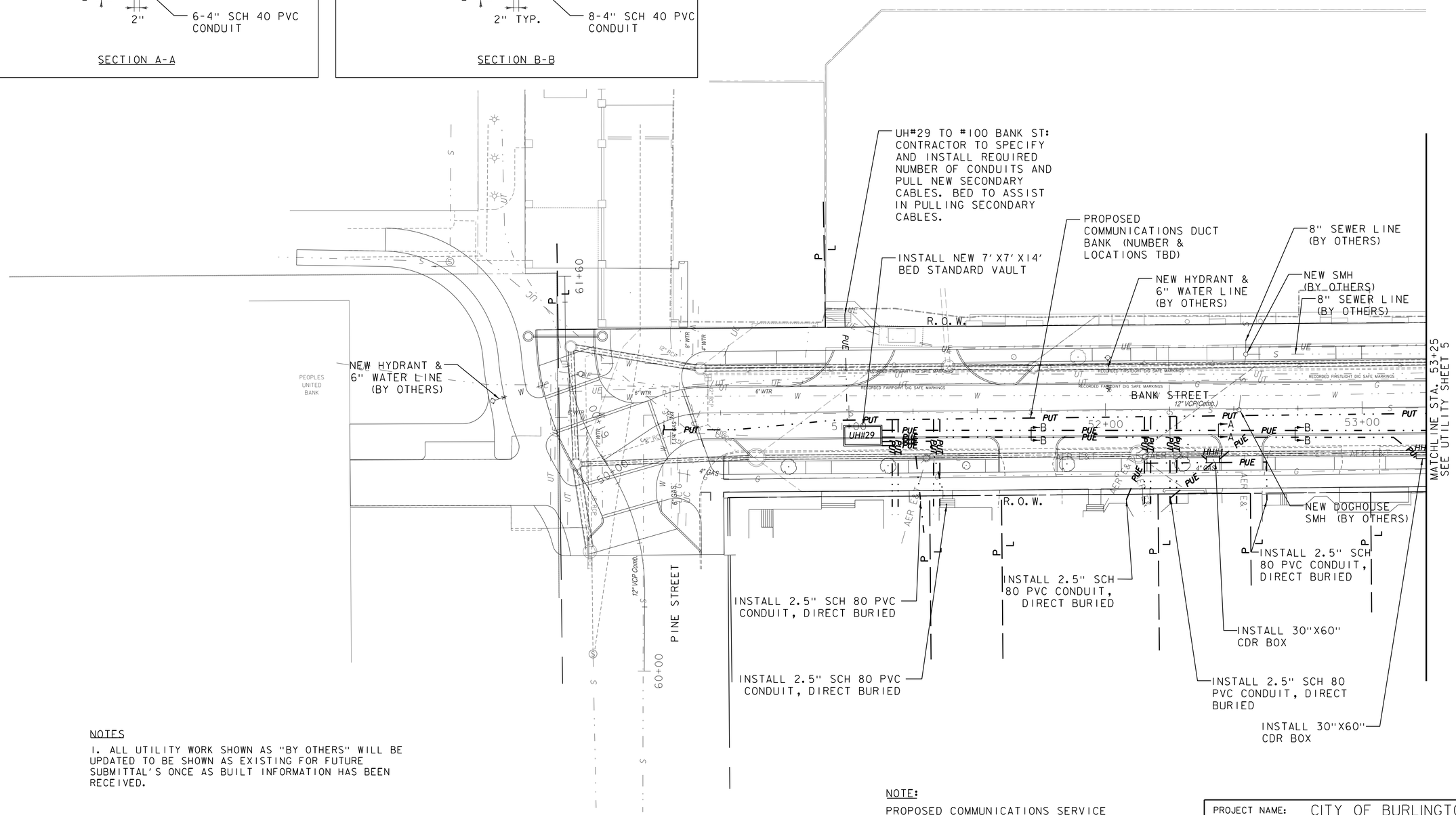

NOTES

1. ALL UTILITY WORK SHOWN AS "BY OTHERS" WILL BE UPDATED TO BE SHOWN AS EXISTING FOR FUTURE SUBMITTAL'S ONCE AS BUILT INFORMATION HAS BEEN RECEIVED.

NOTE:

PROPOSED COMMUNICATIONS SERVICE LOCATIONS TO BE DETERMINED IN FUTURE PLANS.

0 20 40
SCALE

Stantec

PROJECT NAME: CITY OF BURLINGTON	
PROJECT NUMBER: 195311541	
FILE NAME: 11541bdr_util.dgn	PLOT DATE: 6/29/2018
PROJECT LEADER: G. EDWARDS	DRAWN BY: J. BURKE
DESIGNED BY: D. YOULEN	CHECKED BY: G. GOYETTE
UTILITY SHEET 4	SHEET 20 OF 91

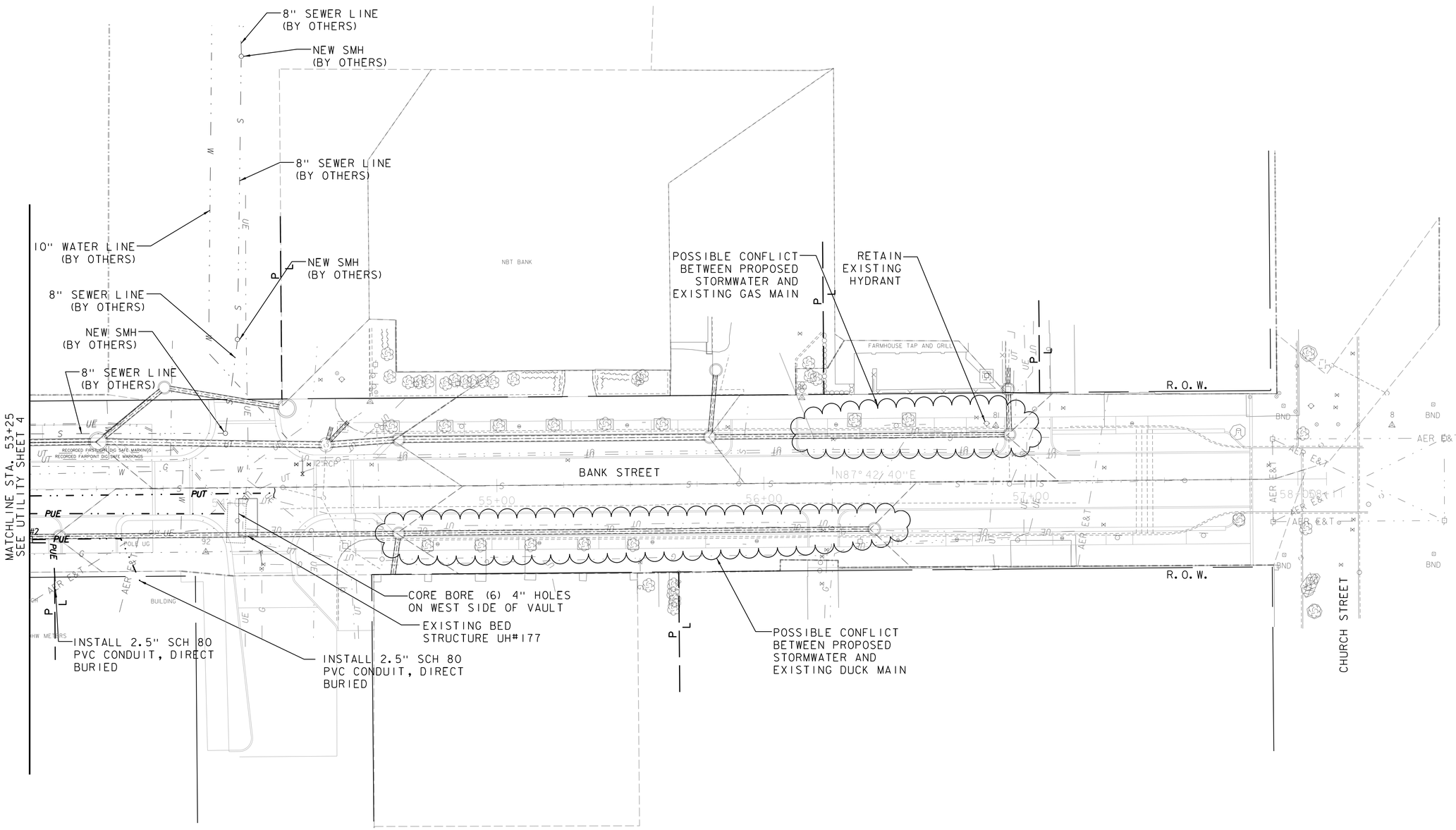

NOTES

1. ALL UTILITY WORK SHOWN AS "BY OTHERS" WILL BE UPDATED TO BE SHOWN AS EXISTING FOR FUTURE SUBMITTAL'S ONCE AS BUILT INFORMATION HAS BEEN RECEIVED.

NOTE:

PROPOSED COMMUNICATIONS SERVICE LOCATIONS TO BE DETERMINED IN FUTURE PLANS.

0 20 40
SCALE

Stantec

PROJECT NAME: CITY OF BURLINGTON	
PROJECT NUMBER: 195311541	
FILE NAME: 1154lbdr_utl.dgn	PLOT DATE: 6/29/2018
PROJECT LEADER: G. EDWARDS	DRAWN BY: J. BURKE
DESIGNED BY: D. YOULEN	CHECKED BY: G. GOYETTE
UTILITY SHEET 5	SHEET 21 OF 91

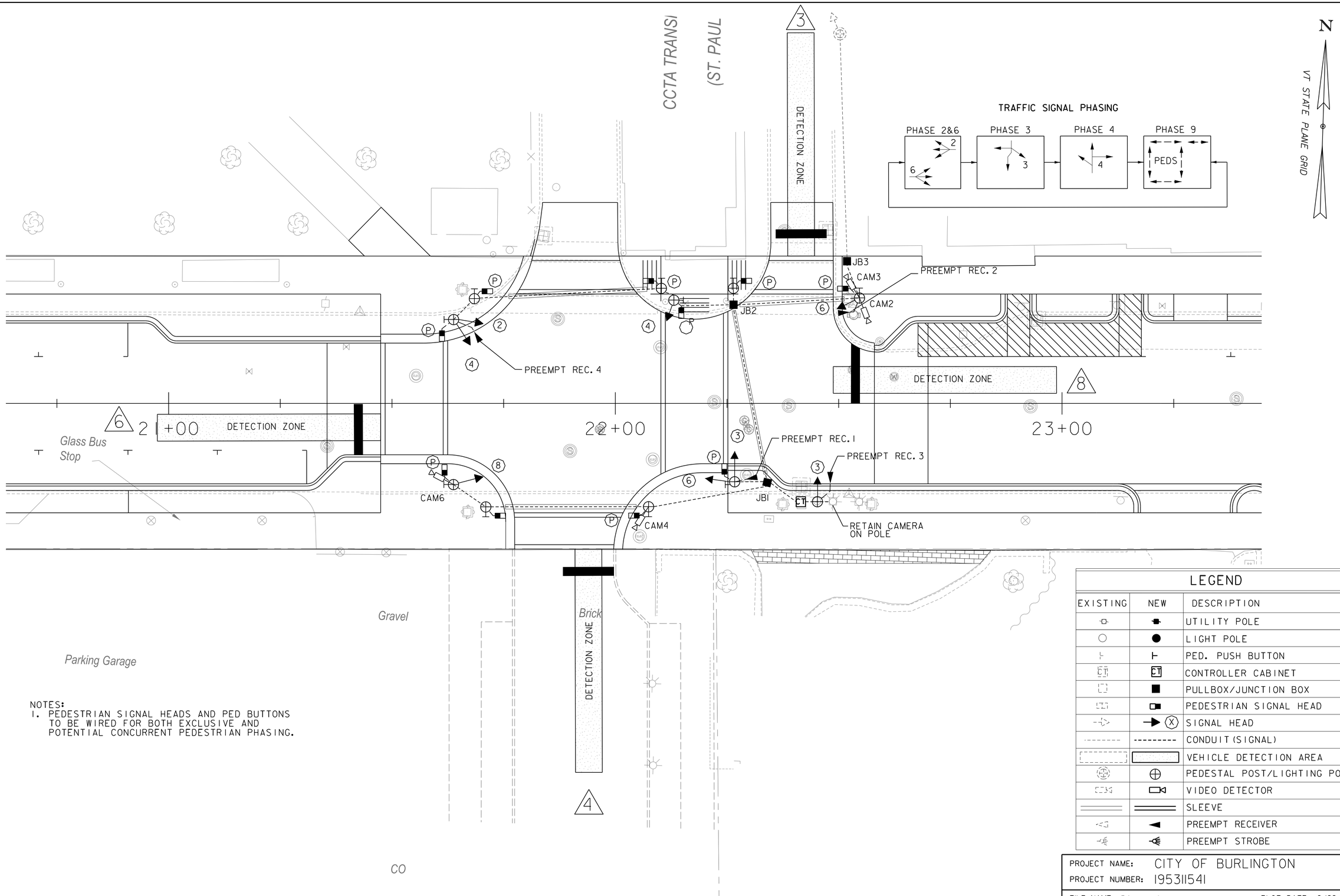

NOTES:
1. PEDESTRIAN SIGNAL HEADS AND PED BUTTONS TO BE WIRED FOR BOTH EXCLUSIVE AND POTENTIAL CONCURRENT PEDESTRIAN PHASING.

LEGEND

EXISTING	NEW	DESCRIPTION
		UTILITY POLE
		LIGHT POLE
		PED. PUSH BUTTON
		CONTROLLER CABINET
		PULLBOX/JUNCTION BOX
		PEDESTRIAN SIGNAL HEAD
		SIGNAL HEAD
		CONDUIT (SIGNAL)
		VEHICLE DETECTION AREA
		PEDESTAL POST/LIGHTING POLE
		VIDEO DETECTOR
		SLEEVE
		PREEMPT RECEIVER
		PREEMPT STROBE

0 10 20
SCALE

Stantec

PROJECT NAME: CITY OF BURLINGTON
PROJECT NUMBER: 195311541

FILE NAME: 1154lbdr_sig.dgn
PROJECT LEADER: G. EDWARDS
DESIGNED BY: K. RICHARDSON
SIGNAL PLAN

PLOT DATE: 6/29/2018
DRAWN BY: G. MERKLE
CHECKED BY: G. GOYETTE
SHEET 22 OF 91

LEGEND

- = BOULDER SEAT
- = TRASH/RECYCLING RECEPTACLE
- = WAYFINDING SIGN
- = BENCH
- = PAY TO PARK KIOSK
- = BIKE RACK
- = TABLE WITH CHAIRS
- = BULLETIN BOARD
- = PLANTER
- = SINGLE ARM STREET LIGHT
- = BOLLARDS
- = TREE
- = SMALL BUSH
- = MEDIUM BUSH
- = BUS SHELTER WITH BENCH
- = LARGE BUS SHELTER WITH BENCH
- = COVERED BIKE RACK
- = DOUBLE ARM STREET LIGHT
- = TREE GRATE

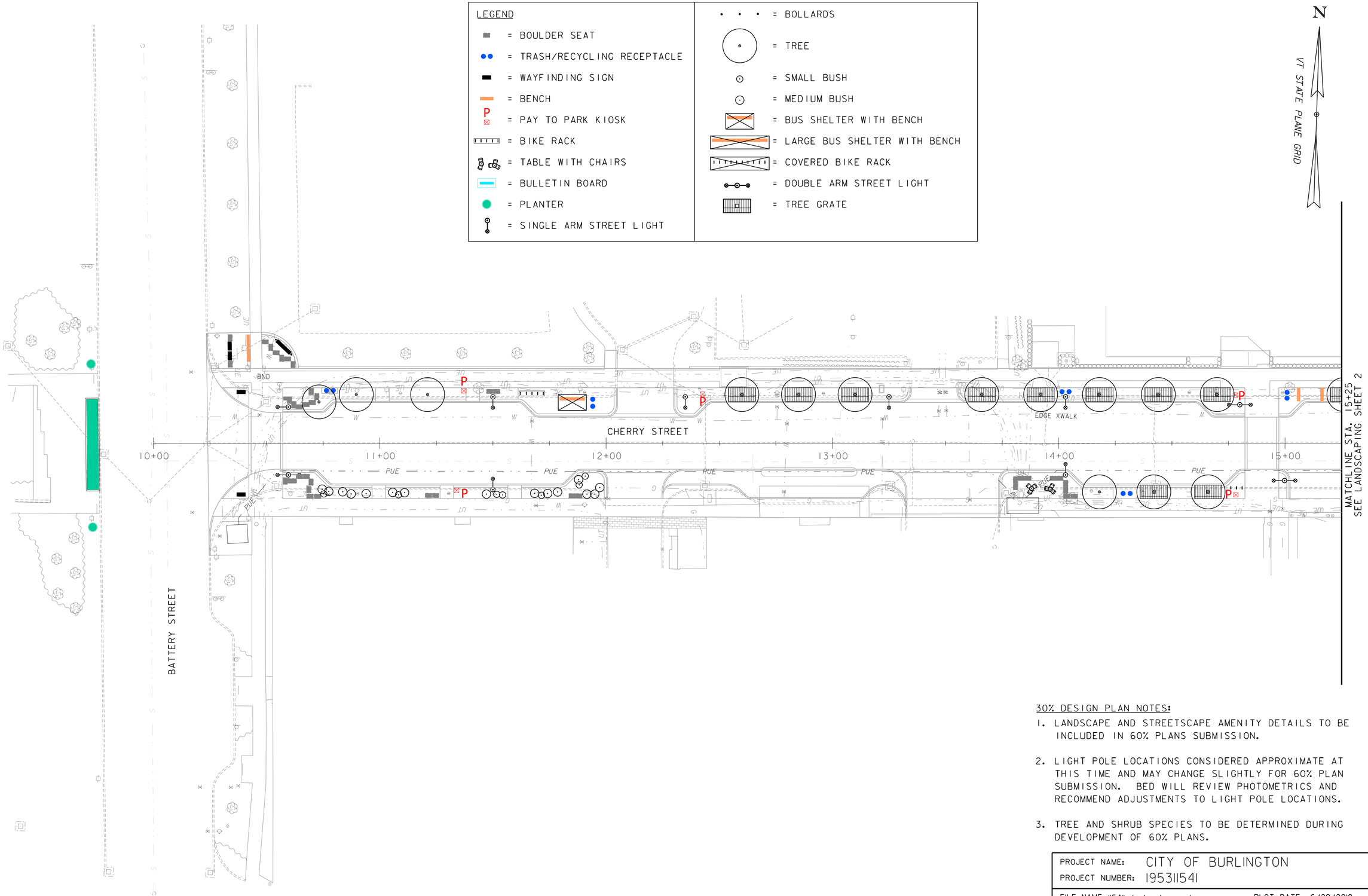

30% DESIGN PLAN NOTES:

1. LANDSCAPE AND STREETSCAPE AMENITY DETAILS TO BE INCLUDED IN 60% PLANS SUBMISSION.
2. LIGHT POLE LOCATIONS CONSIDERED APPROXIMATE AT THIS TIME AND MAY CHANGE SLIGHTLY FOR 60% PLAN SUBMISSION. BED WILL REVIEW PHOTOMETRICS AND RECOMMEND ADJUSTMENTS TO LIGHT POLE LOCATIONS.
3. TREE AND SHRUB SPECIES TO BE DETERMINED DURING DEVELOPMENT OF 60% PLANS.

0 20 40
SCALE

Stantec

PROJECT NAME: CITY OF BURLINGTON	
PROJECT NUMBER: 195311541	
FILE NAME: 1154lbdr_landcape.dgn	PLOT DATE: 6/29/2018
PROJECT LEADER: G. EDWARDS	DRAWN BY: J. BURKE
DESIGNED BY: K. RICHARDSON	CHECKED BY: G. GOYETTE
LANDSCAPING & LIGHTING SHEET 1	SHEET 23 OF 91

LEGEND

- = BOULDER SEAT
- = TRASH/RECYCLING RECEPTACLE
- = WAYFINDING SIGN
- = BENCH
- = PAY TO PARK KIOSK
- = BIKE RACK
- = TABLE AND CHAIRS
- = BULLETIN BOARD
- = PLANTER
- = SINGLE ARM STREET LIGHT
- = BOLLARDS
- = TREE
- = SMALL BUSH
- = MEDIUM BUSH
- = BUS SHELTER WITH BENCH
- = LARGE BUS SHELTER WITH BENCH
- = COVERED BIKE RACK
- = DOUBLE ARM STREET LIGHT
- = TREE GRATE

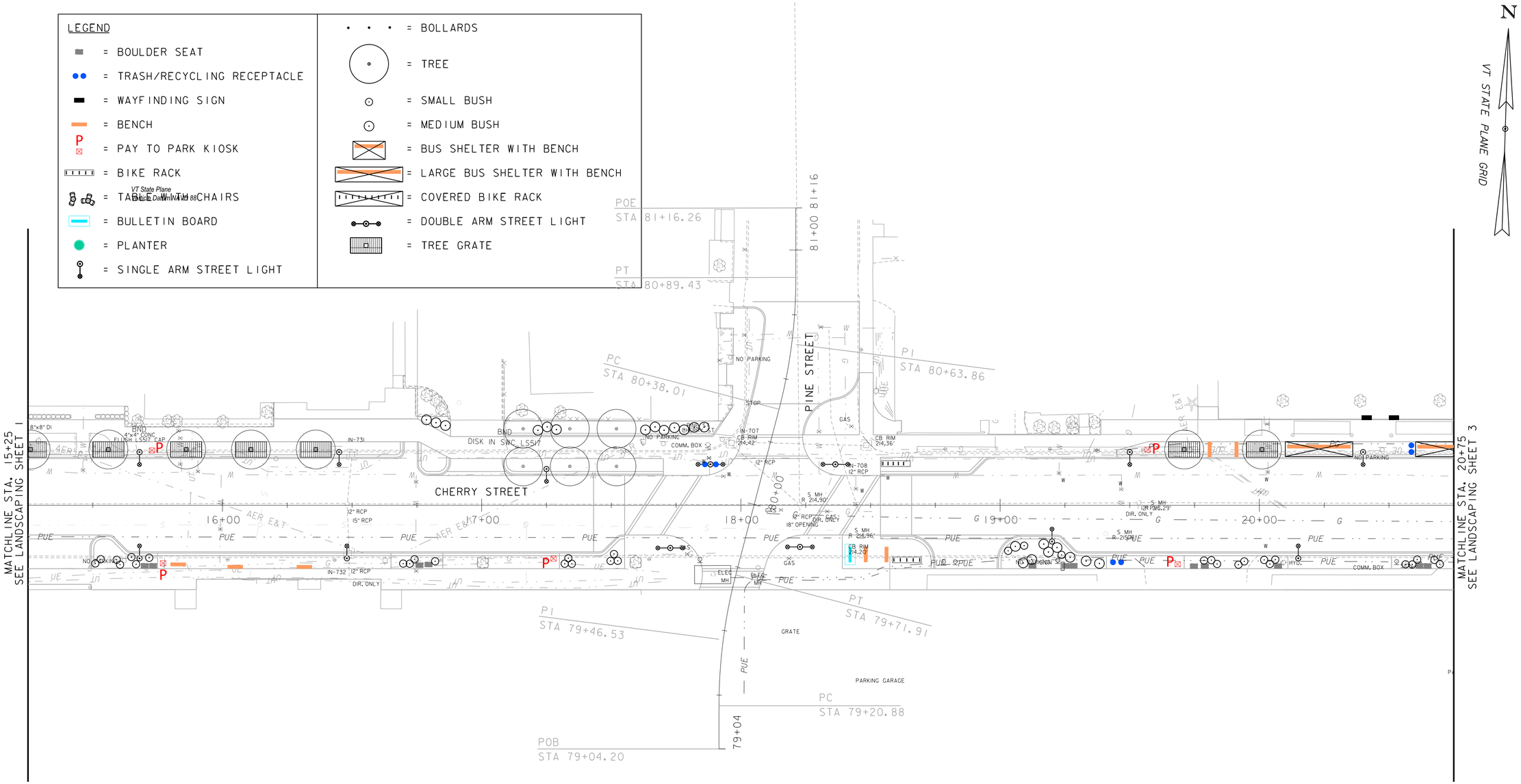

0 20 40
SCALE

Stantec

PROJECT NAME: CITY OF BURLINGTON	
PROJECT NUMBER: 195311541	
FILE NAME: 1154lbdr_landcape.dgn	PLOT DATE: 6/29/2018
PROJECT LEADER: G. EDWARDS	DRAWN BY: J. BURKE
DESIGNED BY: K. RICHARDSON	CHECKED BY: G. GOYETTE
LANDSCAPING & LIGHTING SHEET 2	SHEET 24 OF 91

LEGEND

- = BOULDER SEAT
- = TRASH/RECYCLING RECEPTACLE
- = WAYFINDING SIGN
- = BENCH
- = PAY TO PARK KIOSK
- = BIKE RACK
- = TABLE WITH CHAIRS
- = BULLETIN BOARD
- = PLANTER
- = SINGLE ARM STREET LIGHT
- = BOLLARDS
- = TREE
- = SMALL BUSH
- = MEDIUM BUSH
- = BUS SHELTER WITH BENCH
- = LARGE BUS SHELTER WITH BENCH
- = COVERED BIKE RACK
- = DOUBLE ARM STREET LIGHT
- = TREE GRATE

N

VT STATE PLANE GRID

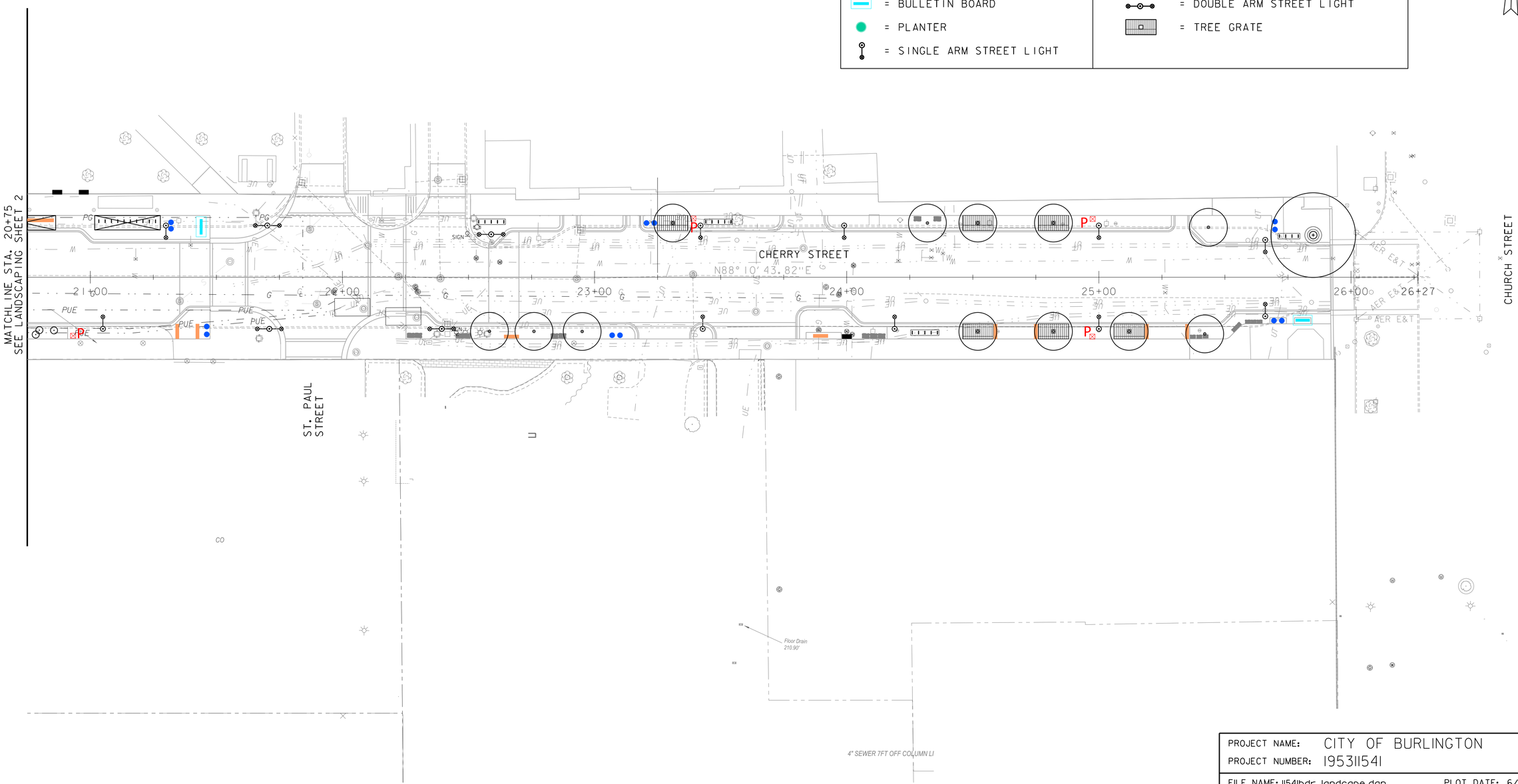

0 20 40
SCALE

Stantec

PROJECT NAME: CITY OF BURLINGTON	
PROJECT NUMBER: 195311541	
FILE NAME: 11541bdr_landcape.dgn	PLOT DATE: 6/29/2018
PROJECT LEADER: G. EDWARDS	DRAWN BY: J. BURKE
DESIGNED BY: K. RICHARDSON	CHECKED BY: G. GOYETTE
LANDSCAPING & LIGHTING SHEET 3	SHEET 25 OF 91

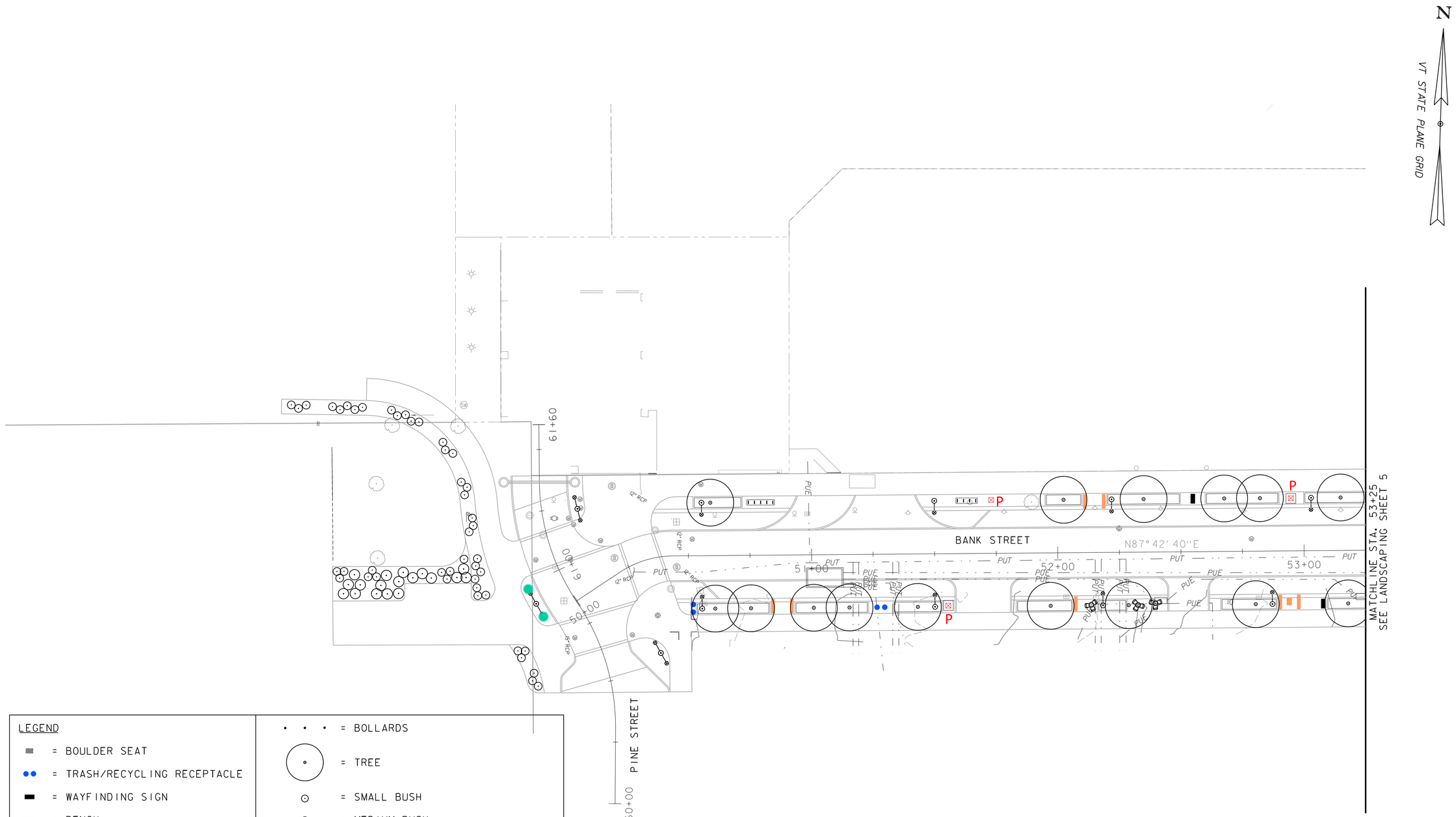

LEGEND

- = BOULDER SEAT
- = TRASH/RECYCLING RECEPTACLE
- = WAYFINDING SIGN
- = BENCH
- P = PAY TO PARK KIOSK
- = BIKE RACK
- = TABLE WITH CHAIRS
- = BULLETIN BOARD
- = PLANTER
- = SINGLE ARM STREET LIGHT
- = BOLLARDS
- = TREE
- = SMALL BUSH
- = MEDIUM BUSH
- = BUS SHELTER WITH BENCH
- = LARGE BUS SHELTER WITH BENCH
- = COVERED BIKE RACK
- = DOUBLE ARM STREET LIGHT
- = TREE GRATE

0 20 40
SCALE

Stantec

PROJECT NAME: CITY OF BURLINGTON
PROJECT NUMBER: 195311541

FILE NAME: 1154lbdr_landcape.dgn
PROJECT LEADER: G. EDWARDS
DESIGNED BY: K. RICHARDSON
LANDSCAPING & LIGHTING SHEET 4

PLOT DATE: 6/29/2018
DRAWN BY: J. BURKE
CHECKED BY: G. GOYETTE
SHEET 26 OF 91

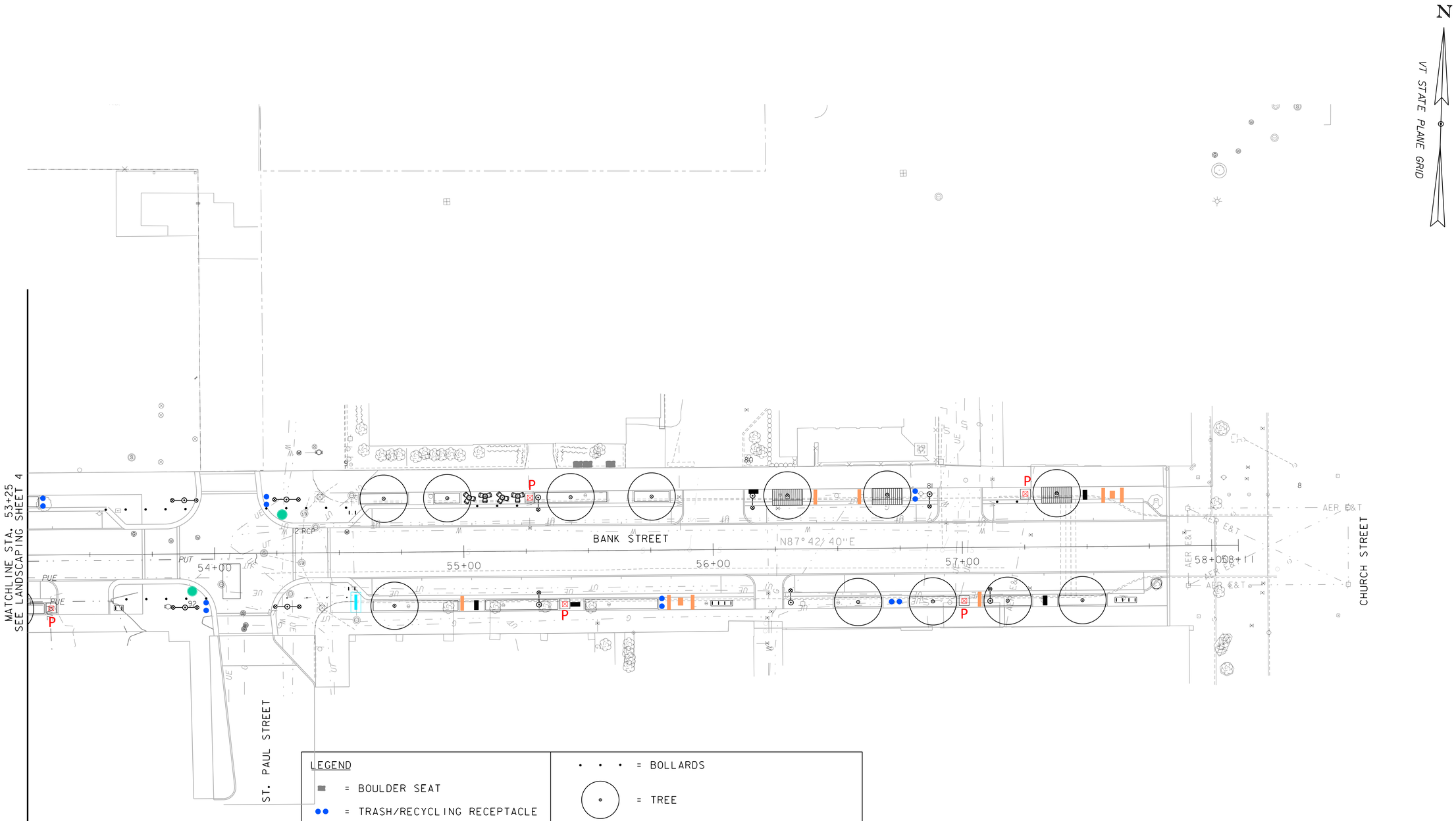

LEGEND

- = BOULDER SEAT
- = TRASH/RECYCLING RECEPTACLE
- = WAYFINDING SIGN
- = BENCH
- P = PAY TO PARK KIOSK
- = BIKE RACK
- = TABLE WITH CHAIRS
- = BULLETIN BOARD
- = PLANTER
- = SINGLE ARM STREET LIGHT
- = BOLLARDS
- = TREE
- = SMALL BUSH
- = MEDIUM BUSH
- = BUS SHELTER WITH BENCH
- = LARGE BUS SHELTER WITH BENCH
- = COVERED BIKE RACK
- = DOUBLE ARM STREET LIGHT
- = TREE GRATE

0 20 40
SCALE

Stantec

PROJECT NAME: CITY OF BURLINGTON	
PROJECT NUMBER: 195311541	
FILE NAME: 1154lbdr_landcape.dgn	PLOT DATE: 6/29/2018
PROJECT LEADER: G. EDWARDS	DRAWN BY: J. BURKE
DESIGNED BY: K. RICHARDSON	CHECKED BY: G. GOYETTE
LANDSCAPING & LIGHTING SHEET 5	SHEET 27 OF 91

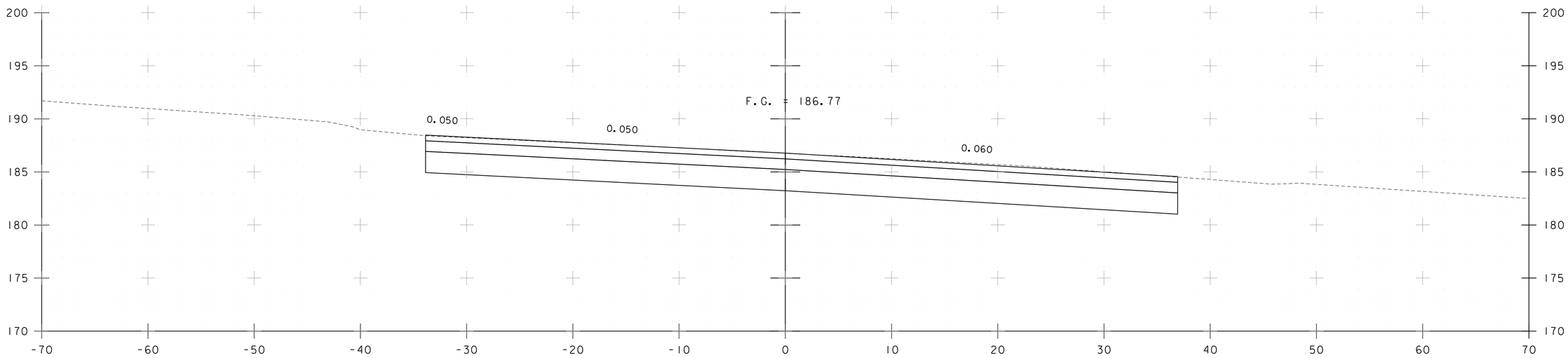

10+25

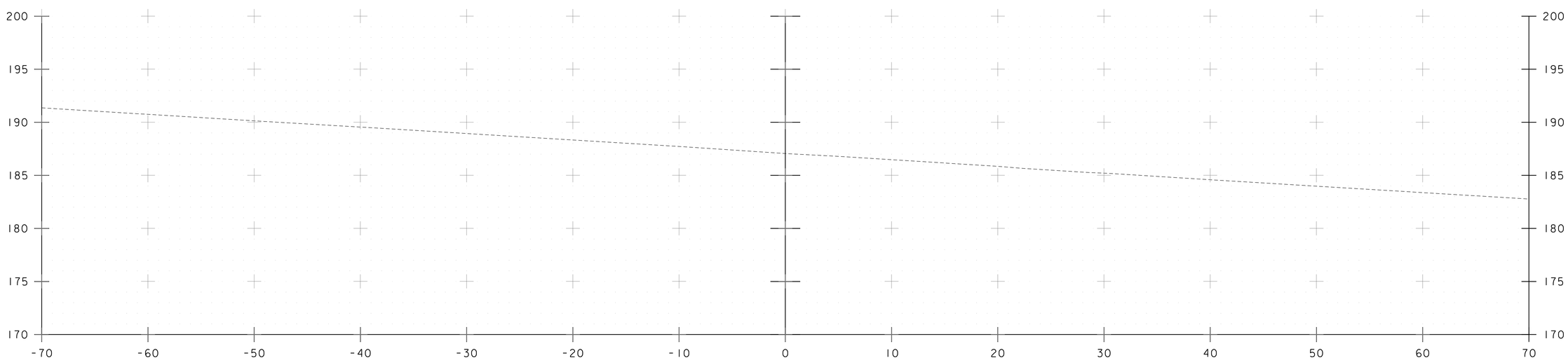

10+00

CHERRY STREET CROSS SECTIONS

PROJECT NAME:

PROJECT NUMBER: 195311541

FILE NAME: 11541xs.dgn	PLOT DATE: 6/29/2018
PROJECT LEADER: G. EDWARDS	DRAWN BY: G. MERKLE
DESIGNED BY: K. RICHARDSON	CHECKED BY: G. GOYETTE
CROSS SECTIONS 1	SHEET 28 OF 91

Stantec

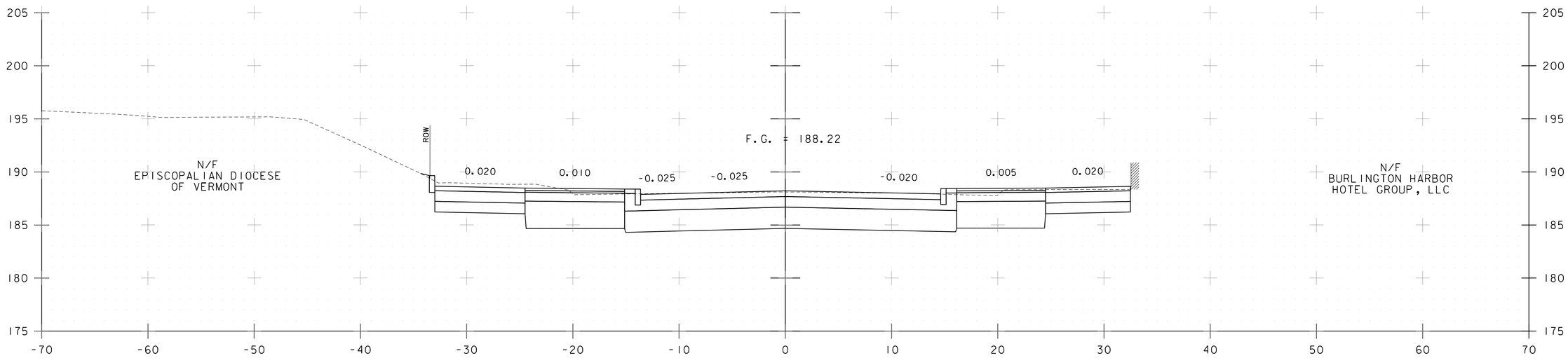

10+75

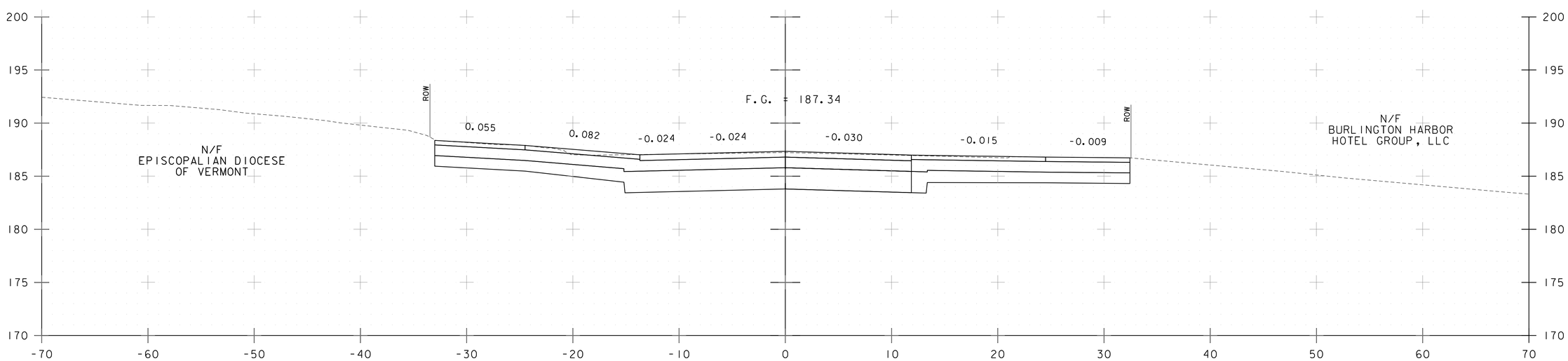

10+50

CHERRY STREET CROSS SECTIONS

PROJECT NAME: CITY OF BURLINGTON	
PROJECT NUMBER: 195311541	
FILE NAME: 11541xs.dgn	PLOT DATE: 6/29/2018
PROJECT LEADER: G. EDWARDS	DRAWN BY: G. MERKLE
DESIGNED BY: K. RICHARDSON	CHECKED BY: G. GOYETTE
CROSS SECTIONS 2	SHEET 29 OF 91

Stantec

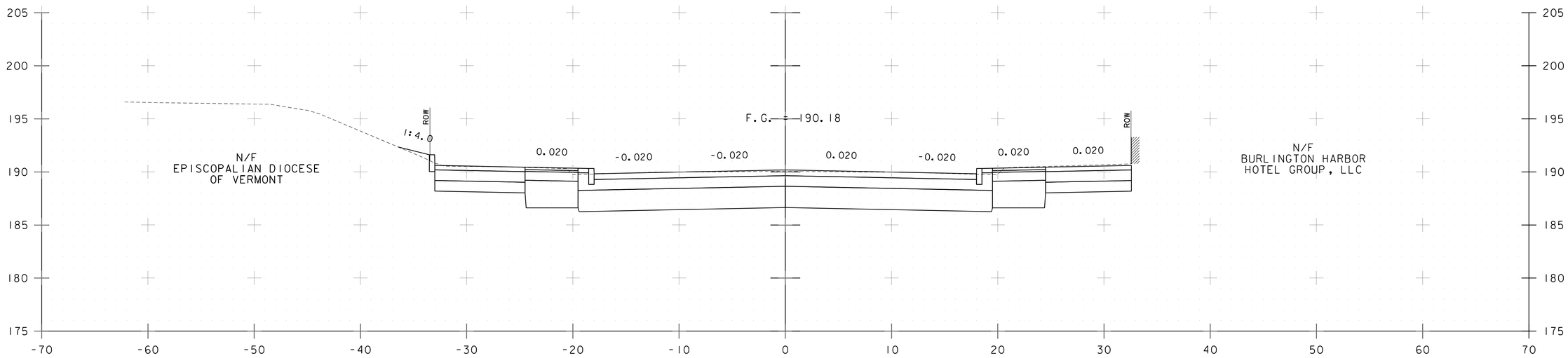

11+25

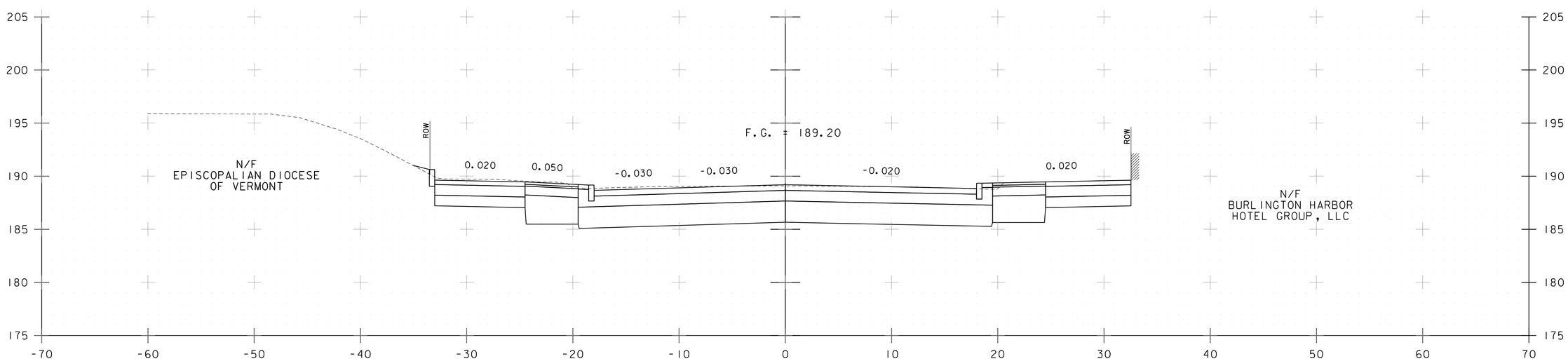

11+00

CHERRY STREET CROSS SECTIONS

PROJECT NAME: CITY OF BURLINGTON	
PROJECT NUMBER: 195311541	
FILE NAME: 11541xs.dgn	PLOT DATE: 6/29/2018
PROJECT LEADER: G. EDWARDS	DRAWN BY: G. MERKLE
DESIGNED BY: K. RICHARDSON	CHECKED BY: G. GOYETTE
CROSS SECTIONS 3	SHEET 30 OF 91

Stantec

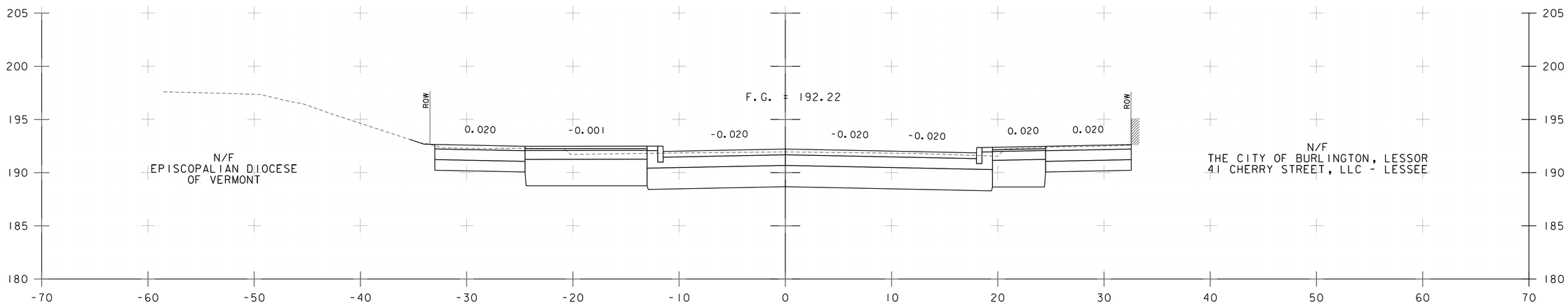

11+75

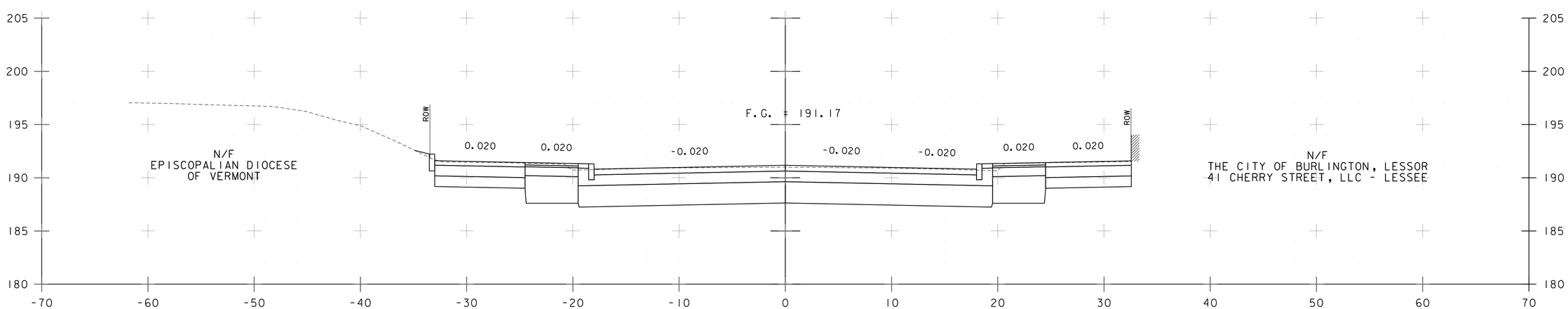

11+50

CHERRY STREET CROSS SECTIONS

PROJECT NAME: CITY OF BURLINGTON	
PROJECT NUMBER: 195311541	
FILE NAME: 11541xs.dgn	PLOT DATE: 6/29/2018
PROJECT LEADER: G. EDWARDS	DRAWN BY: G. MERKLE
DESIGNED BY: K. RICHARDSON	CHECKED BY: G. GOYETTE
CROSS SECTIONS 4	SHEET 31 OF 91

Stantec

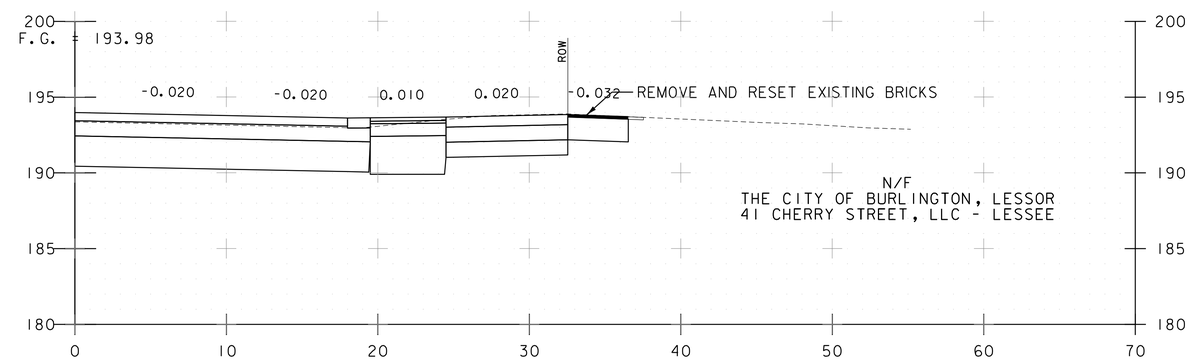

12+13

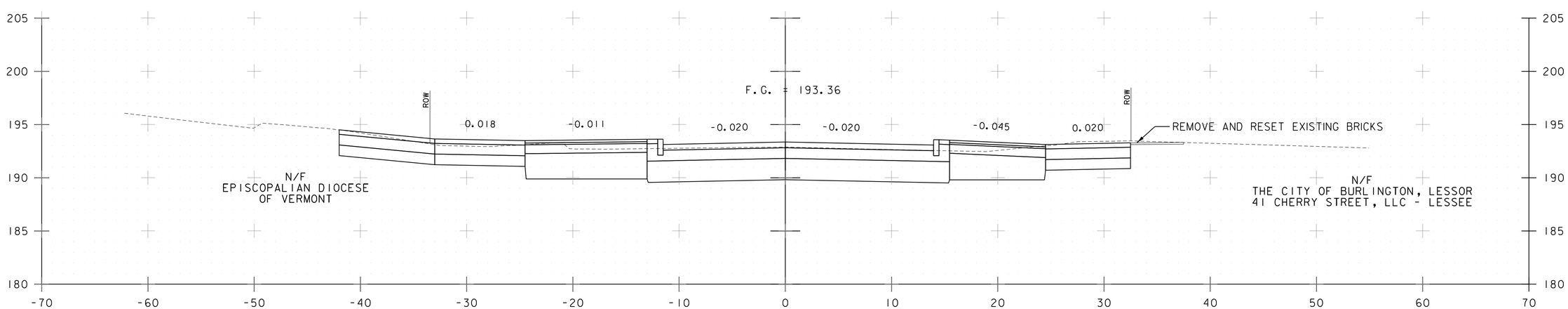

12+00

CHERRY STREET CROSS SECTIONS

PROJECT NAME: CITY OF BURLINGTON	
PROJECT NUMBER: 195311541	
FILE NAME: 11541xs.dgn	PLOT DATE: 6/29/2018
PROJECT LEADER: G. EDWARDS	DRAWN BY: G. MERKLE
DESIGNED BY: K. RICHARDSON	CHECKED BY: G. GOYETTE
CROSS SECTIONS 5	SHEET 32 OF 91

Stantec

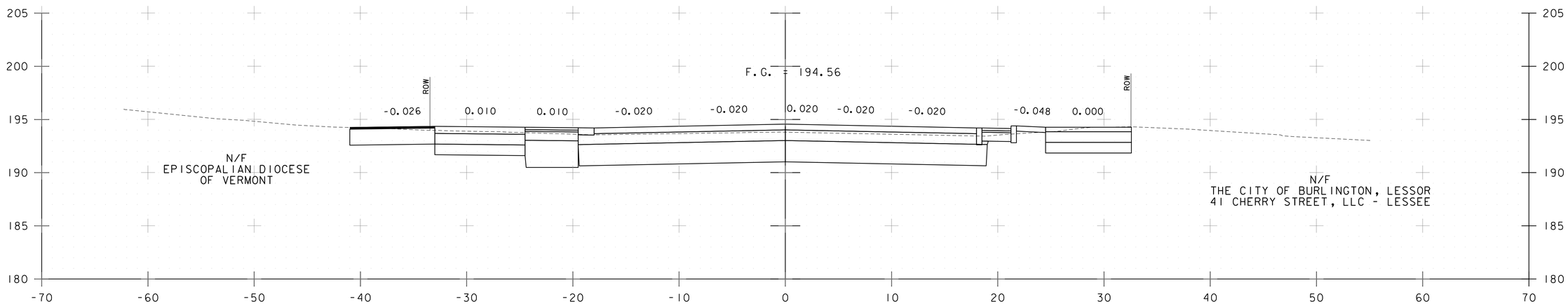

12+25

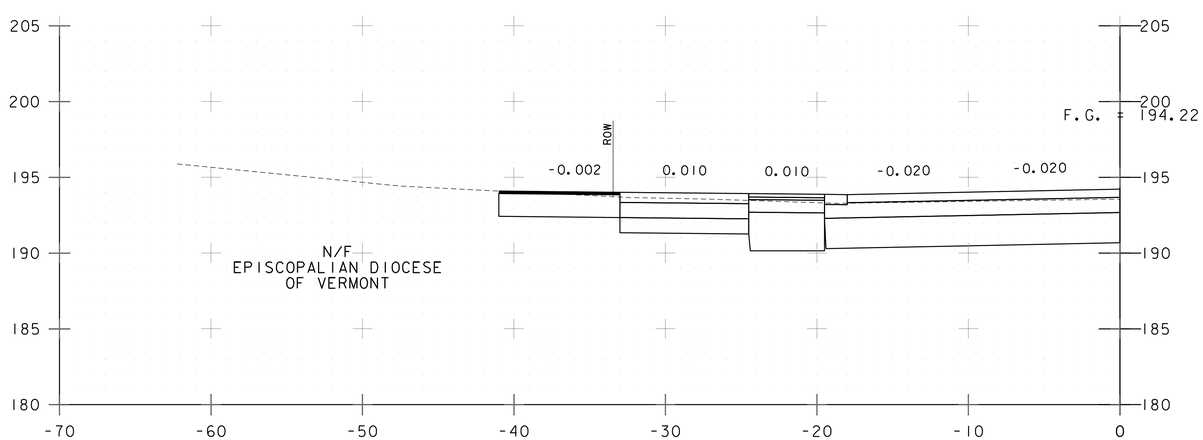

12+18

CHERRY STREET CROSS SECTIONS

PROJECT NAME: CITY OF BURLINGTON	
PROJECT NUMBER: 195311541	
FILE NAME: 11541xs.dgn	PLOT DATE: 6/29/2018
PROJECT LEADER: G. EDWARDS	DRAWN BY: G. MERKLE
DESIGNED BY: K. RICHARDSON	CHECKED BY: G. GOYETTE
CROSS SECTIONS 6	SHEET 33 OF 91

Stantec

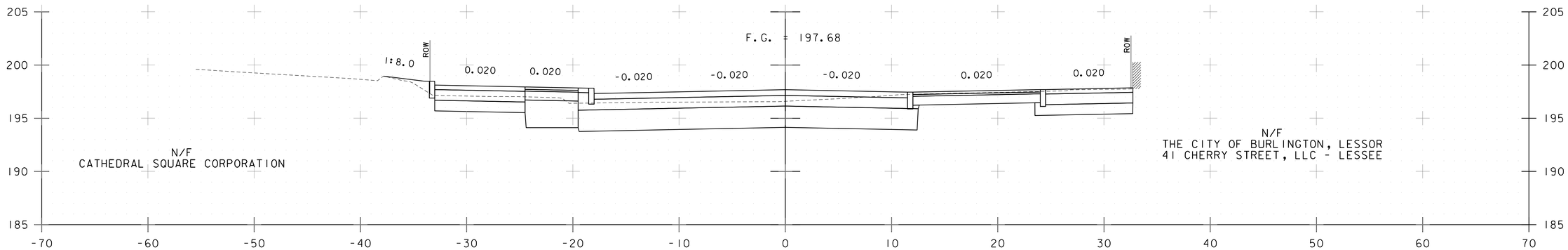

13+00

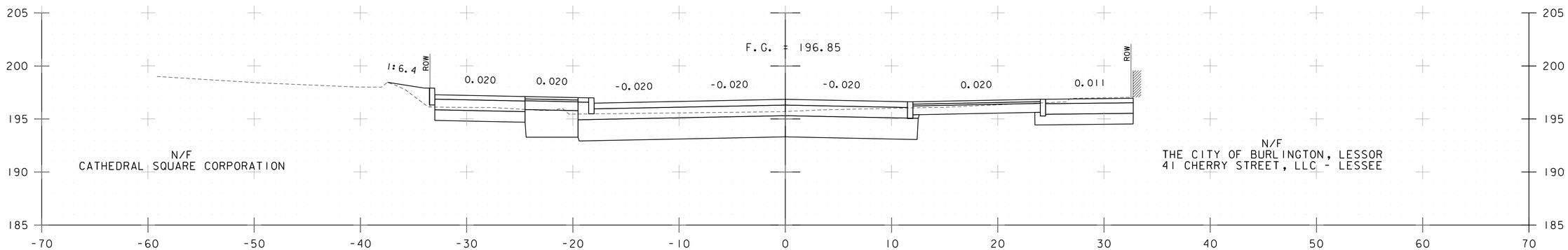

12+75

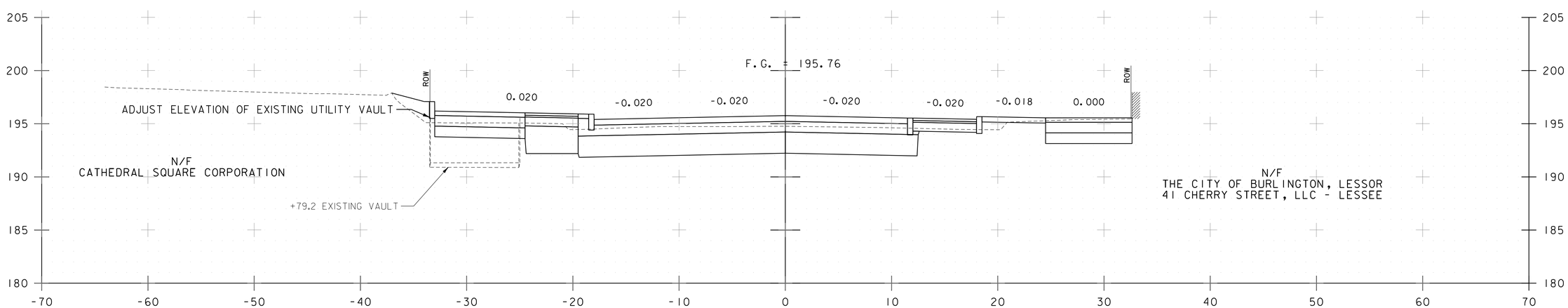

12+50

CHERRY STREET CROSS SECTIONS

PROJECT NAME: CITY OF BURLINGTON	
PROJECT NUMBER: 195311541	
FILE NAME: 11541xs.dgn	PLOT DATE: 6/29/2018
PROJECT LEADER: G. EDWARDS	DRAWN BY: G. MERKLE
DESIGNED BY: K. RICHARDSON	CHECKED BY: G. GOYETTE
CROSS SECTIONS 7	SHEET 34 OF 91

Stantec

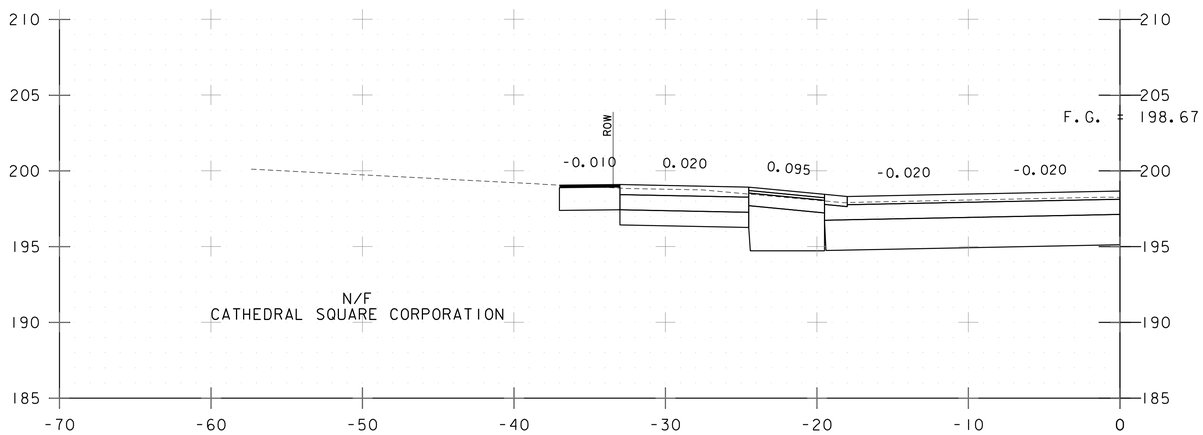

13+45

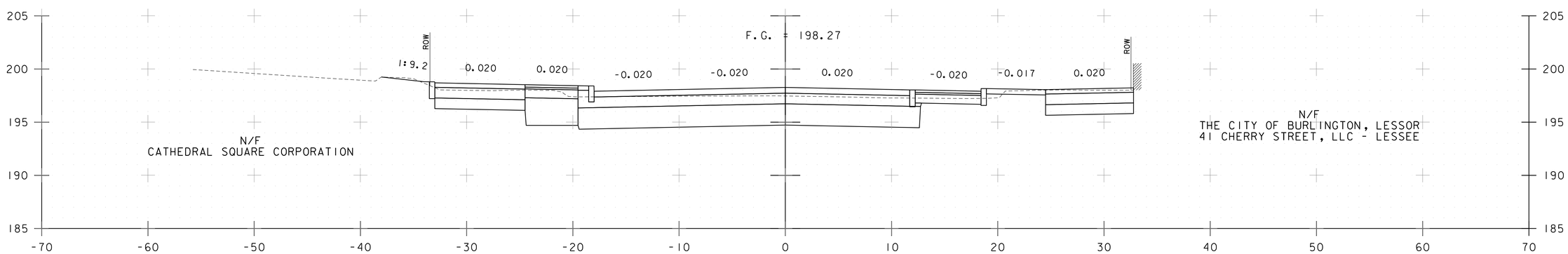

13+25

CHERRY STREET CROSS SECTIONS

PROJECT NAME: CITY OF BURLINGTON
PROJECT NUMBER: 195311541

Stantec

FILE NAME: 11541xs.dgn
PROJECT LEADER: G. EDWARDS
DESIGNED BY: K. RICHARDSON
CROSS SECTIONS 8

PLOT DATE: 6/29/2018
DRAWN BY: G. MERKLE
CHECKED BY: G. GOYETTE
SHEET 35 OF 91

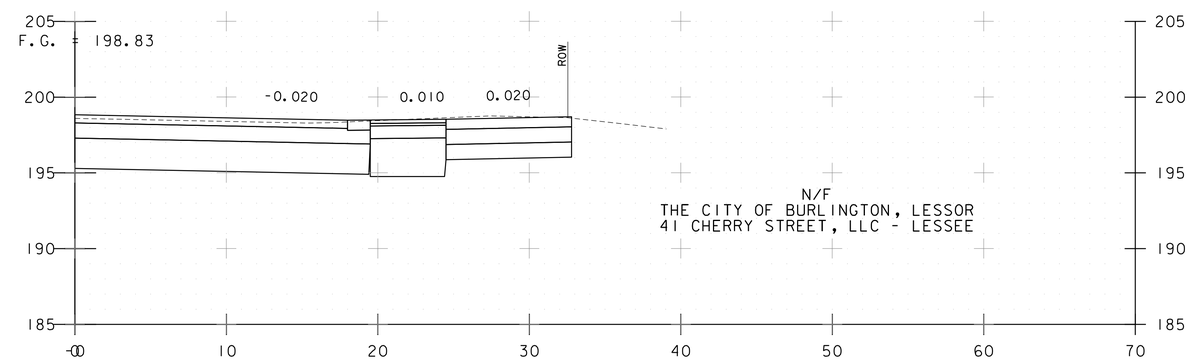

13+53

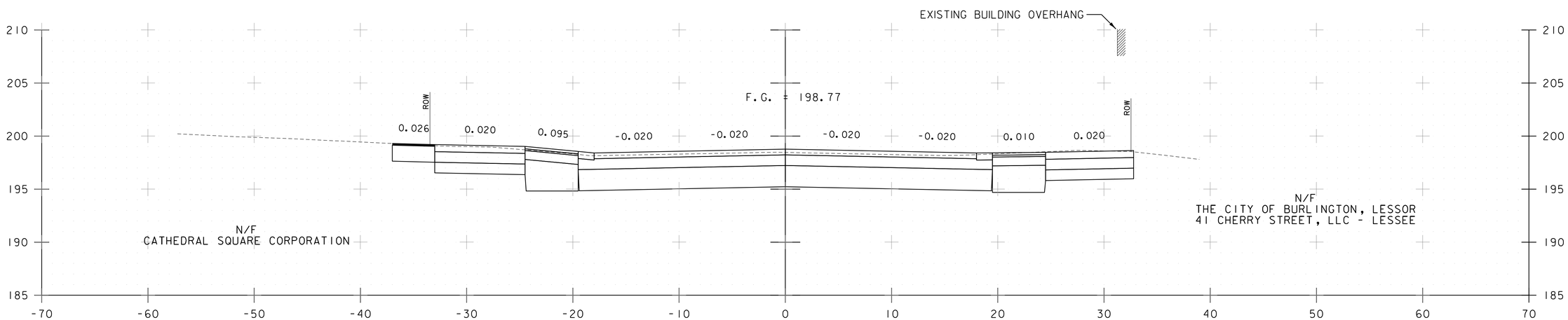

13+50

CHERRY STREET CROSS SECTIONS

PROJECT NAME: CITY OF BURLINGTON
PROJECT NUMBER: 195311541

Stantec

FILE NAME: 11541xs.dgn
PROJECT LEADER: G. EDWARDS
DESIGNED BY: K. RICHARDSON
CROSS SECTIONS 9

PLOT DATE: 6/29/2018
DRAWN BY: G. MERKLE
CHECKED BY: G. GOYETTE
SHEET 36 OF 91

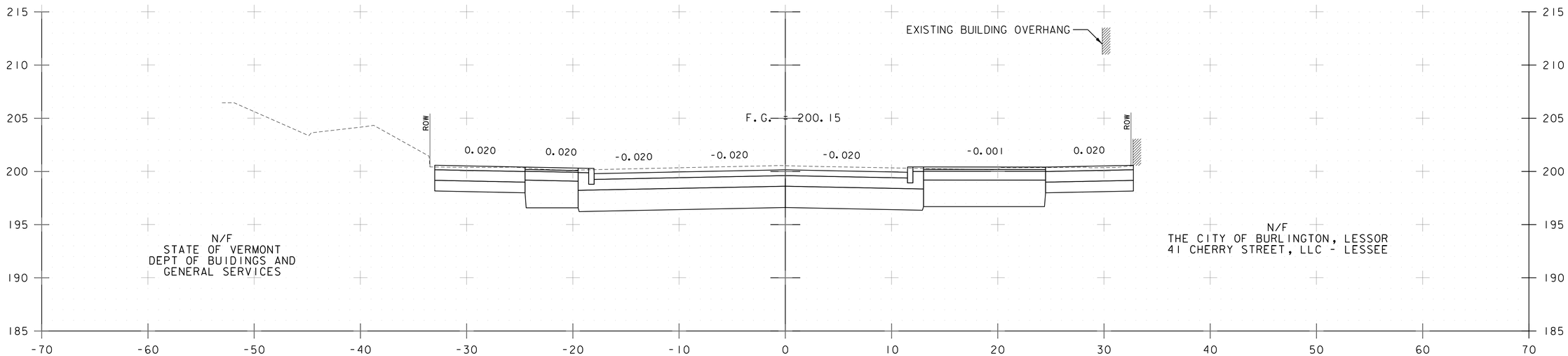

14+00

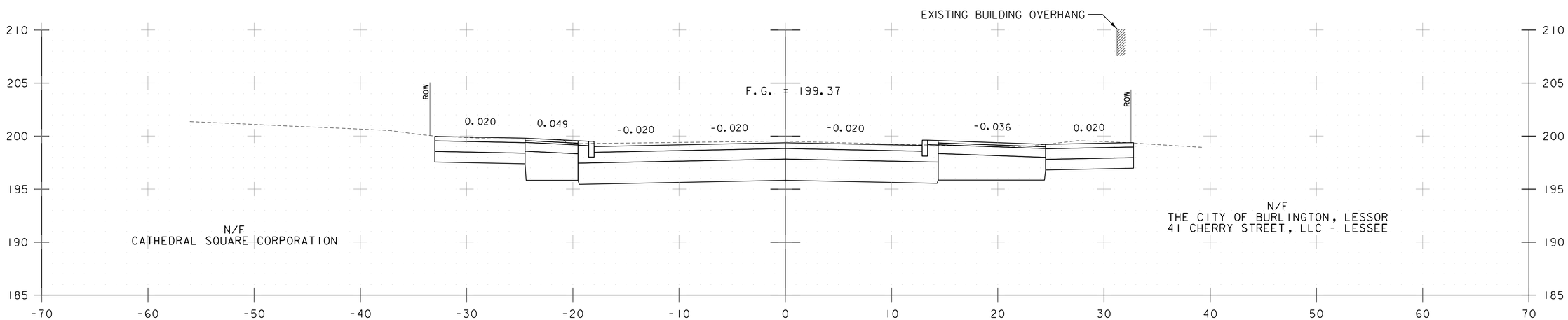

13+75

CHERRY STREET CROSS SECTIONS

PROJECT NAME: CITY OF BURLINGTON
PROJECT NUMBER: 195311541

Stantec

FILE NAME: 11541xs.dgn
PROJECT LEADER: G. EDWARDS
DESIGNED BY: K. RICHARDSON
CROSS SECTIONS 10

PLOT DATE: 6/29/2018
DRAWN BY: G. MERKLE
CHECKED BY: G. GOYETTE
SHEET 37 OF 91

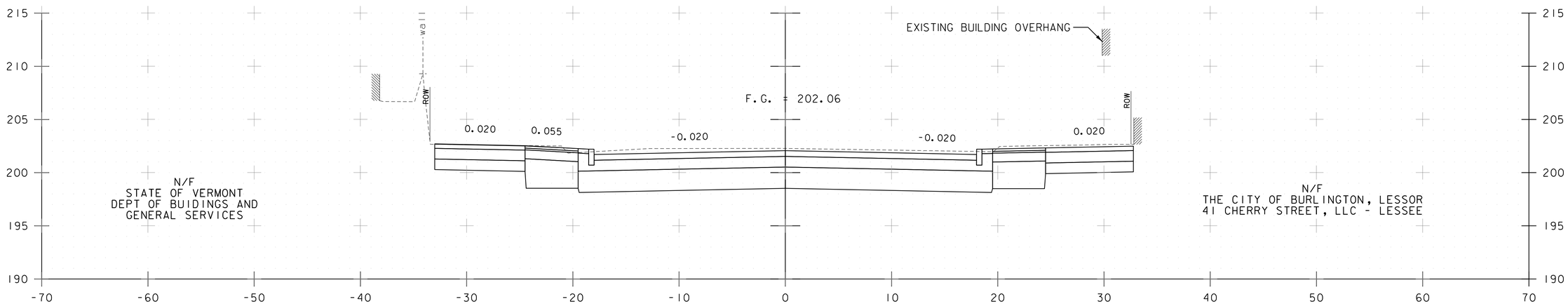

14+50

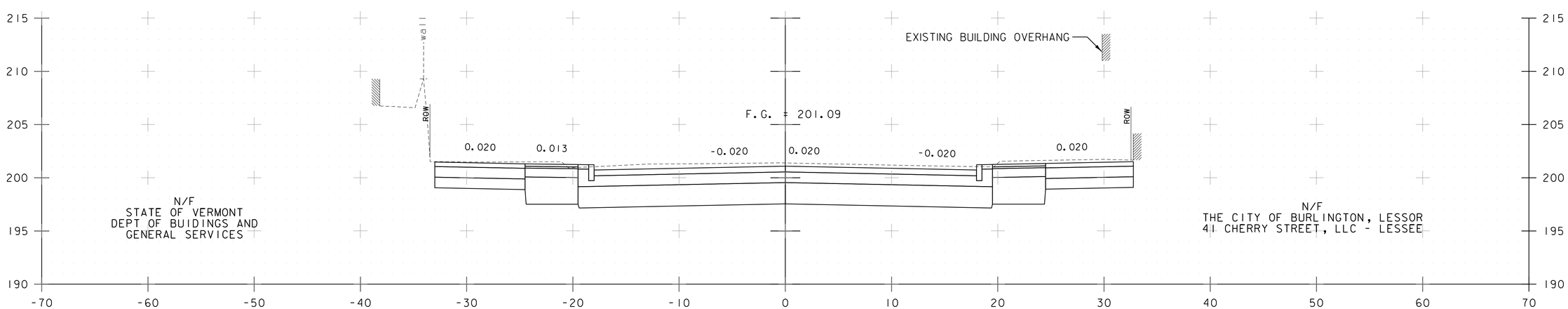

14+25

CHERRY STREET CROSS SECTIONS

PROJECT NAME: CITY OF BURLINGTON	
PROJECT NUMBER: 195311541	
FILE NAME: 11541xs.dgn	PLOT DATE: 6/29/2018
PROJECT LEADER: G. EDWARDS	DRAWN BY: G. MERKLE
DESIGNED BY: K. RICHARDSON	CHECKED BY: G. GOYETTE
CROSS SECTIONS II	SHEET 38 OF 91

Stantec

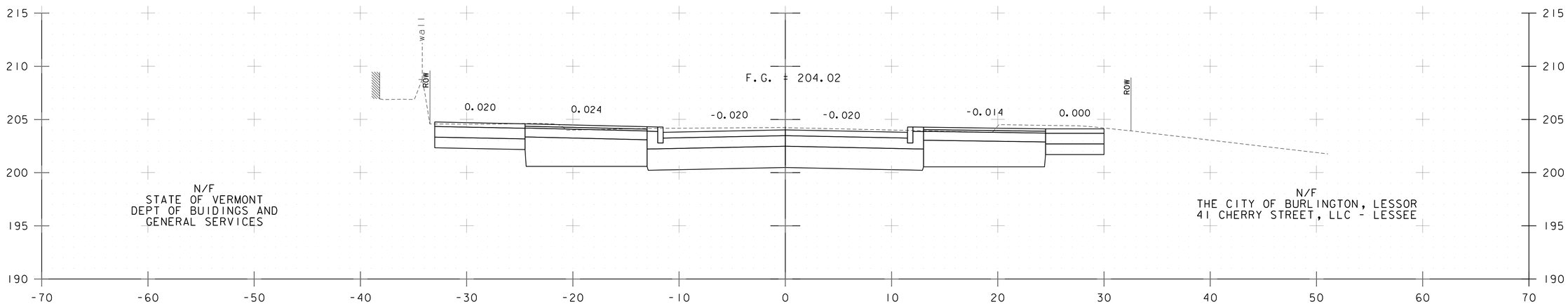

15+00

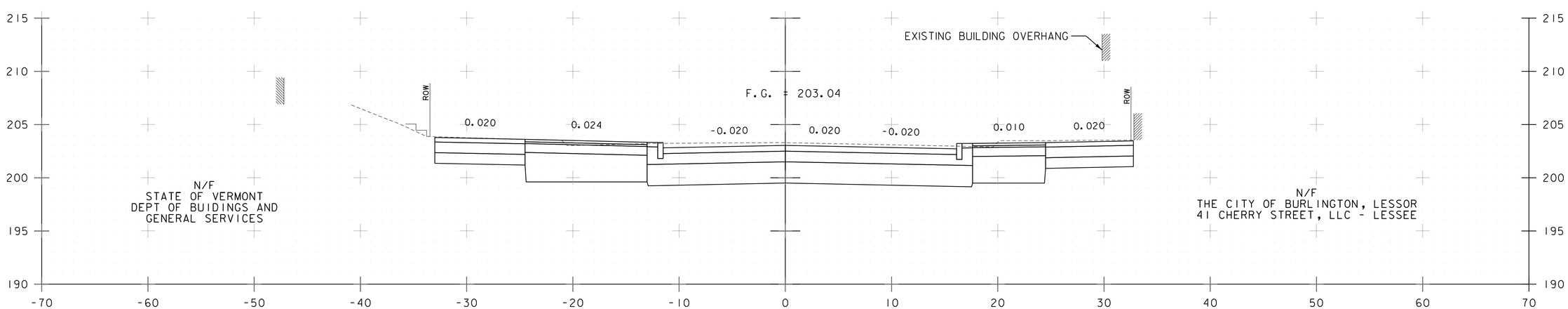

14+75

CHERRY STREET CROSS SECTIONS

PROJECT NAME: CITY OF BURLINGTON
PROJECT NUMBER: 195311541

Stantec

FILE NAME: 11541xs.dgn
PROJECT LEADER: G. EDWARDS
DESIGNED BY: K. RICHARDSON
CROSS SECTIONS 12

PLOT DATE: 6/29/2018
DRAWN BY: G. MERKLE
CHECKED BY: G. GOYETTE
SHEET 39 OF 91

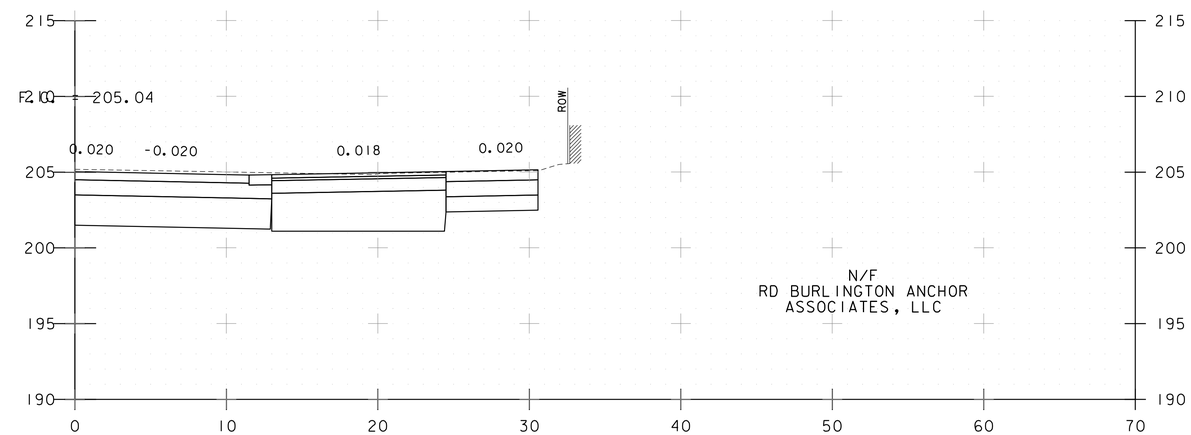

15+26

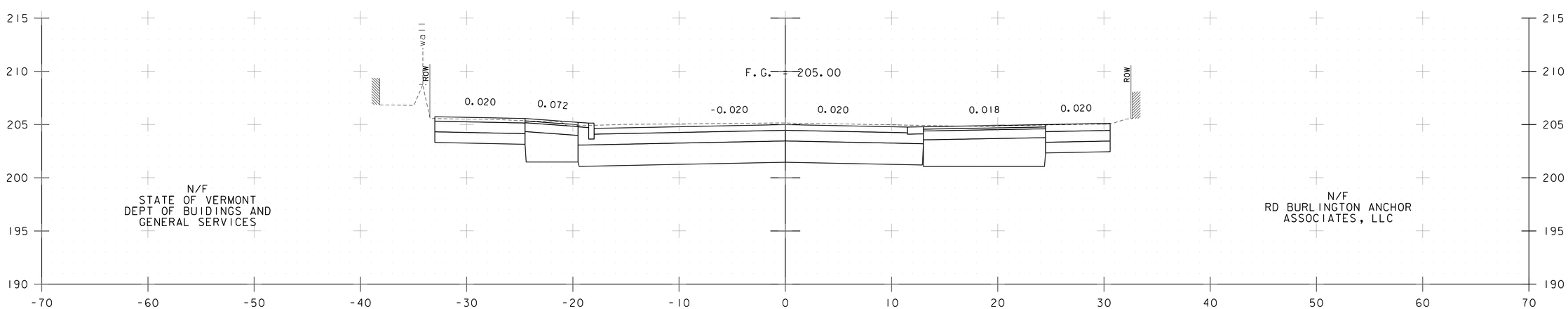

15+25

CHERRY STREET CROSS SECTIONS

PROJECT NAME: CITY OF BURLINGTON	
PROJECT NUMBER: 195311541	
FILE NAME: 11541xs.dgn	PLOT DATE: 6/29/2018
PROJECT LEADER: G. EDWARDS	DRAWN BY: G. MERKLE
DESIGNED BY: K. RICHARDSON	CHECKED BY: G. GOYETTE
CROSS SECTIONS 13	SHEET 40 OF 91

Stantec

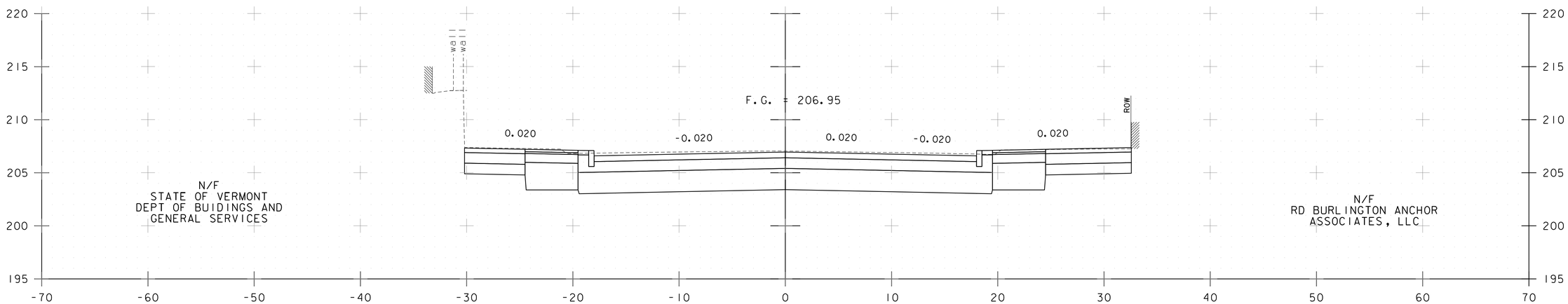

15+75

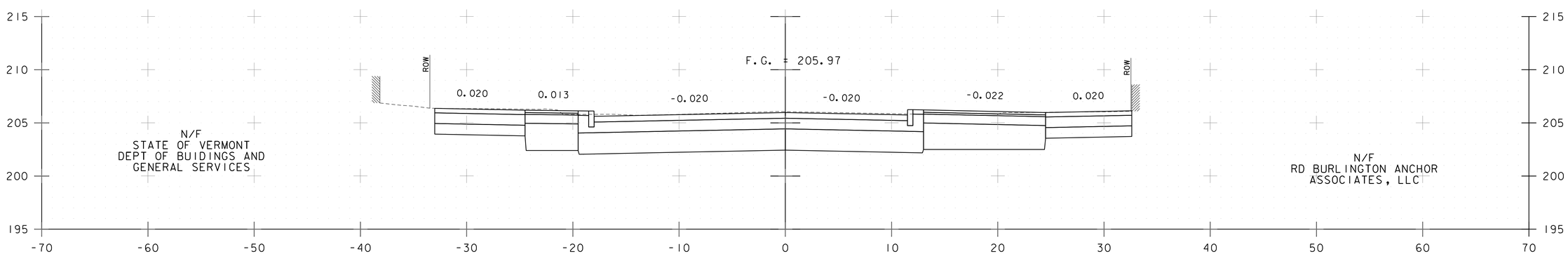

15+50

CHERRY STREET CROSS SECTIONS

PROJECT NAME: CITY OF BURLINGTON	
PROJECT NUMBER: 195311541	
FILE NAME: 11541xs.dgn	PLOT DATE: 6/29/2018
PROJECT LEADER: G. EDWARDS	DRAWN BY: G. MERKLE
DESIGNED BY: K. RICHARDSON	CHECKED BY: G. GOYETTE
CROSS SECTIONS 14	SHEET 41 OF 91

Stantec

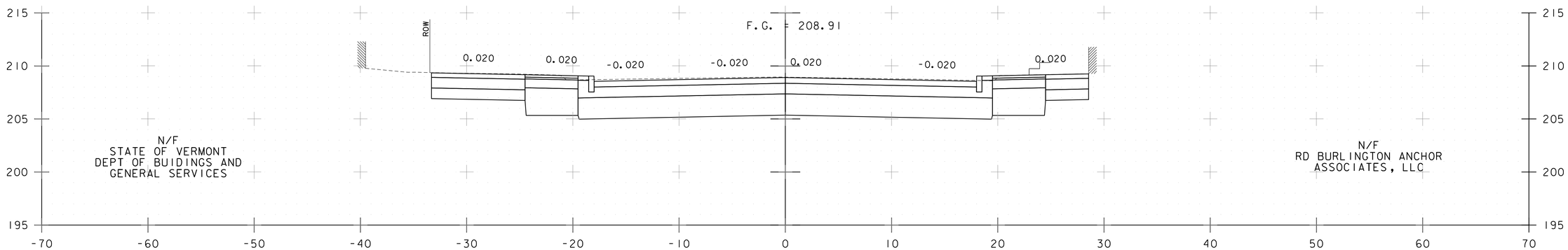

16+25

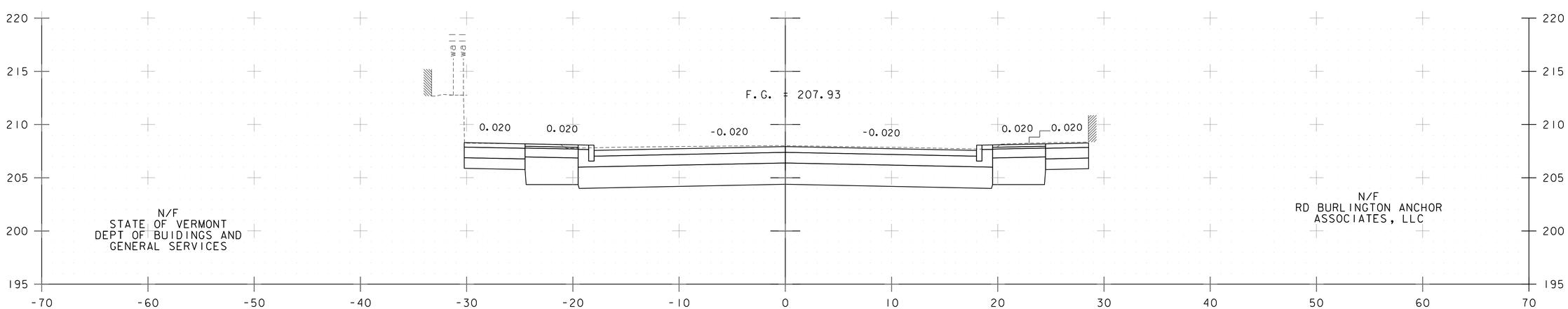

16+00

CHERRY STREET CROSS SECTIONS

PROJECT NAME: CITY OF BURLINGTON
PROJECT NUMBER: 195311541

Stantec

FILE NAME: 11541xs.dgn
PROJECT LEADER: G. EDWARDS
DESIGNED BY: K. RICHARDSON
CROSS SECTIONS 15

PLOT DATE: 6/29/2018
DRAWN BY: G. MERKLE
CHECKED BY: G. GOYETTE
SHEET 42 OF 91

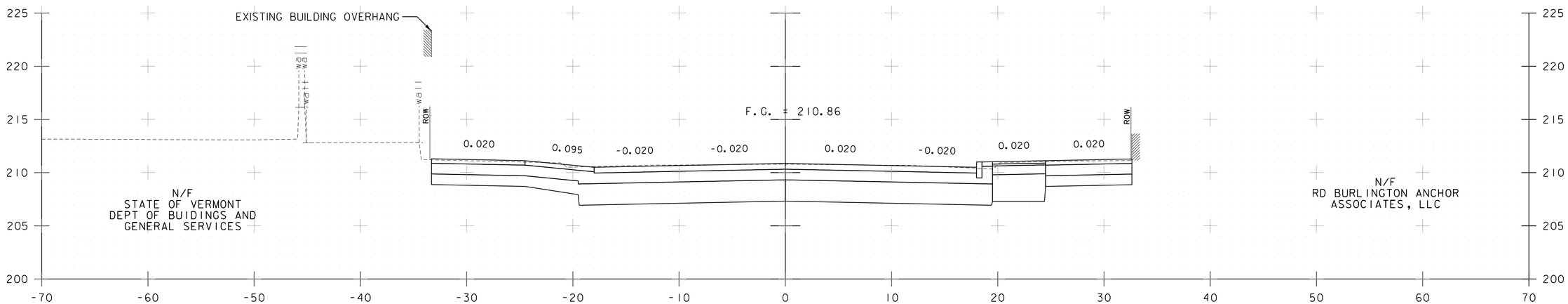

16+75

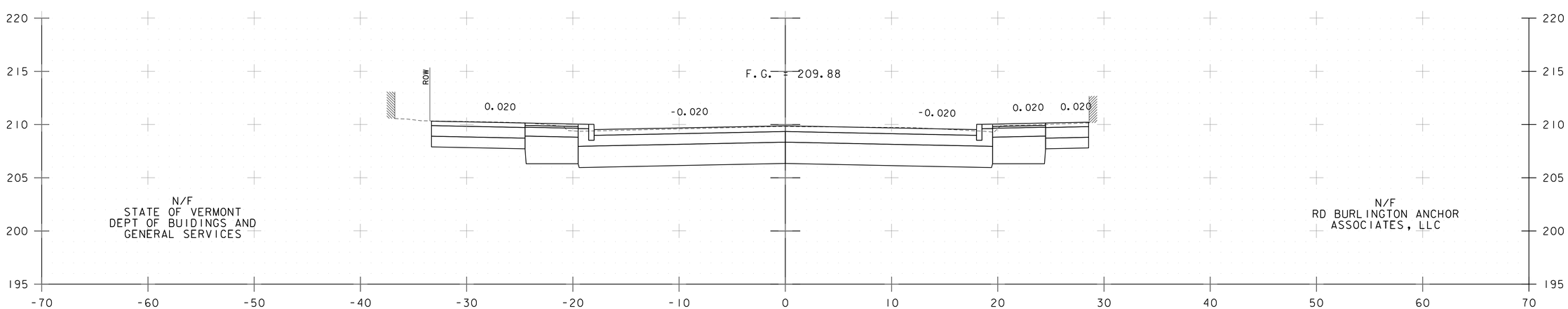

16+50

CHERRY STREET CROSS SECTIONS

PROJECT NAME: CITY OF BURLINGTON	
PROJECT NUMBER: 195311541	
FILE NAME: 11541xs.dgn	PLOT DATE: 6/29/2018
PROJECT LEADER: G. EDWARDS	DRAWN BY: G. MERKLE
DESIGNED BY: K. RICHARDSON	CHECKED BY: G. GOYETTE
CROSS SECTIONS 16	SHEET 43 OF 91

Stantec

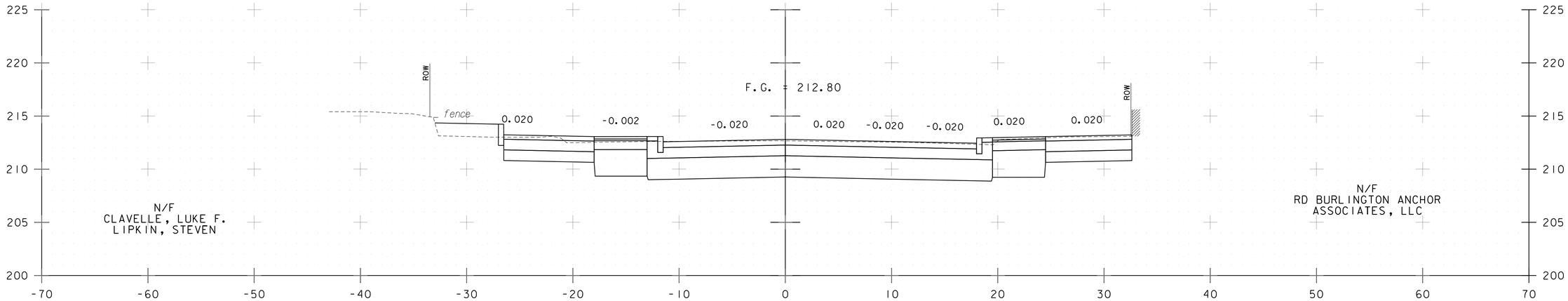

17+25

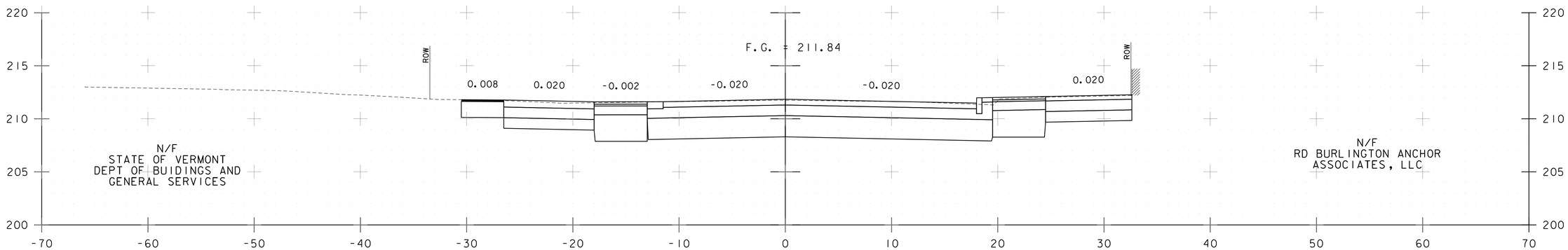

17+00

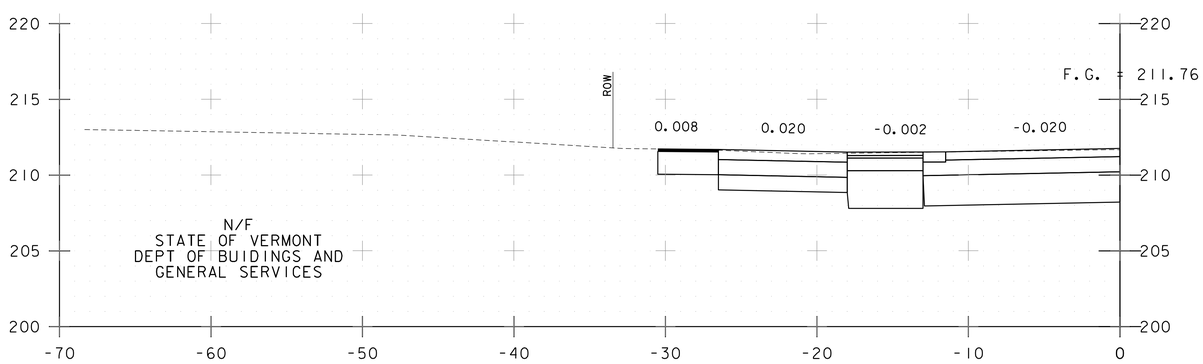

16+98

CHERRY STREET CROSS SECTIONS

PROJECT NAME: CITY OF BURLINGTON
PROJECT NUMBER: 195311541

FILE NAME: 11541xs.dgn
PROJECT LEADER: G. EDWARDS
DESIGNED BY: K. RICHARDSON
CROSS SECTIONS 17

PLOT DATE: 6/29/2018
DRAWN BY: G. MERKLE
CHECKED BY: G. GOYETTE
SHEET 44 OF 91

Stantec

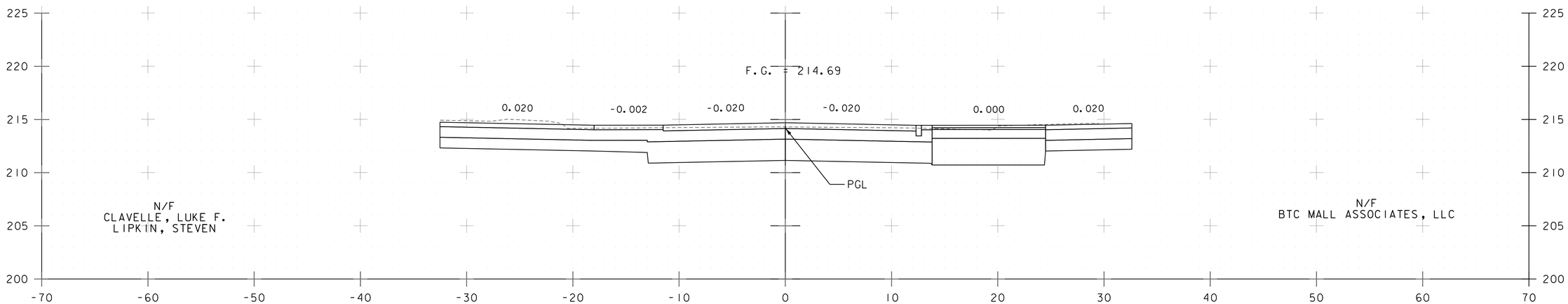

17+75

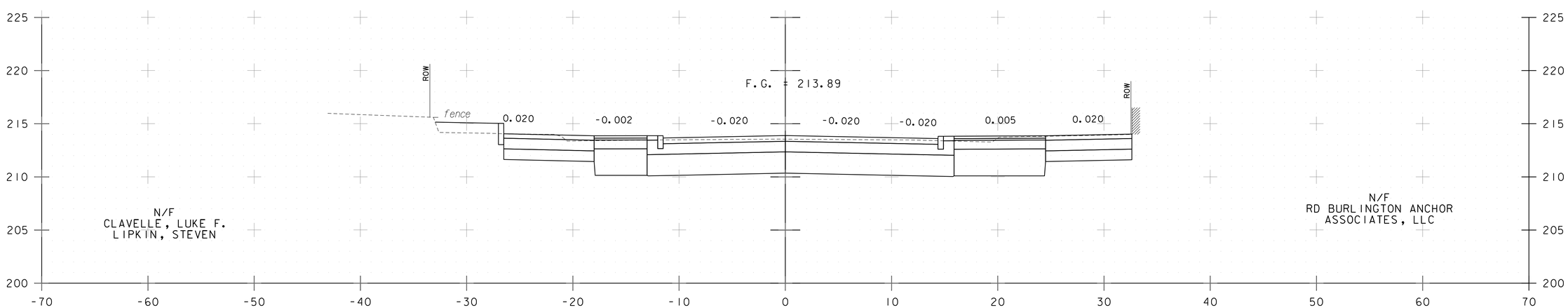

17+50

CHERRY STREET CROSS SECTIONS

PROJECT NAME: CITY OF BURLINGTON
PROJECT NUMBER: 195311541

Stantec

FILE NAME: 11541xs.dgn
PROJECT LEADER: G. EDWARDS
DESIGNED BY: K. RICHARDSON
CROSS SECTIONS 18

PLOT DATE: 6/29/2018
DRAWN BY: G. MERKLE
CHECKED BY: G. GOYETTE
SHEET 45 OF 91

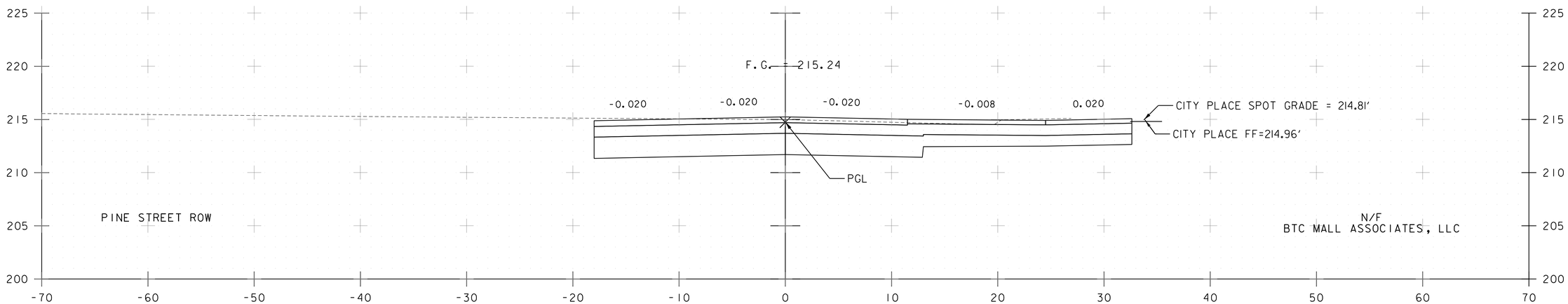

18+25

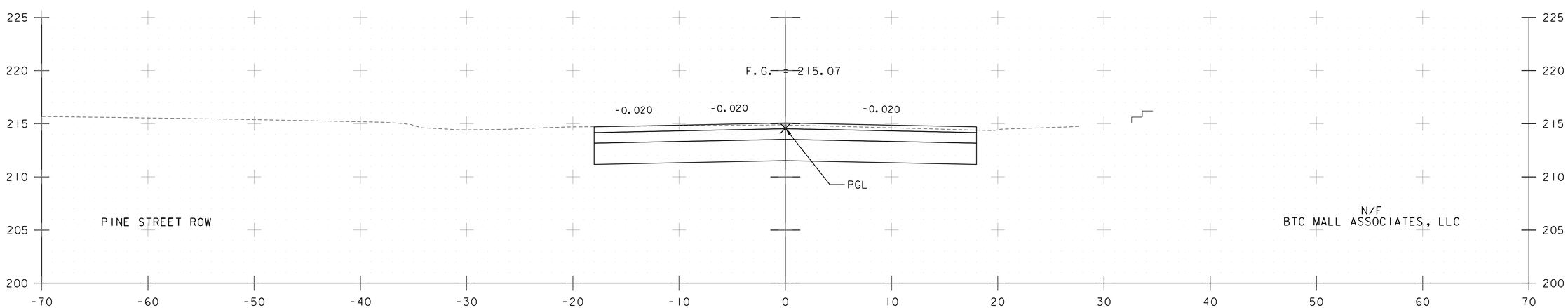

18+00

CHERRY STREET CROSS SECTIONS

PROJECT NAME: CITY OF BURLINGTON	
PROJECT NUMBER: 195311541	
FILE NAME: 11541xs.dgn	PLOT DATE: 6/29/2018
PROJECT LEADER: G. EDWARDS	DRAWN BY: G. MERKLE
DESIGNED BY: K. RICHARDSON	CHECKED BY: G. GOYETTE
CROSS SECTIONS 19	SHEET 46 OF 91

Stantec

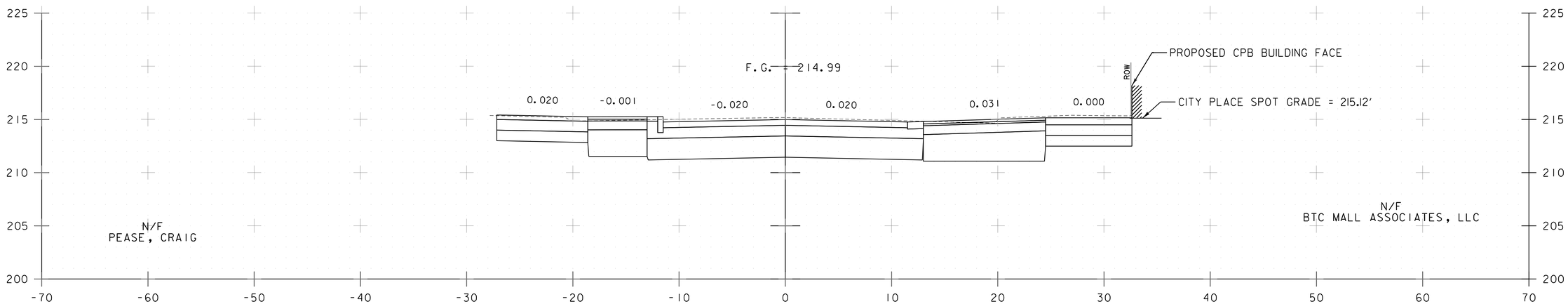

18+75

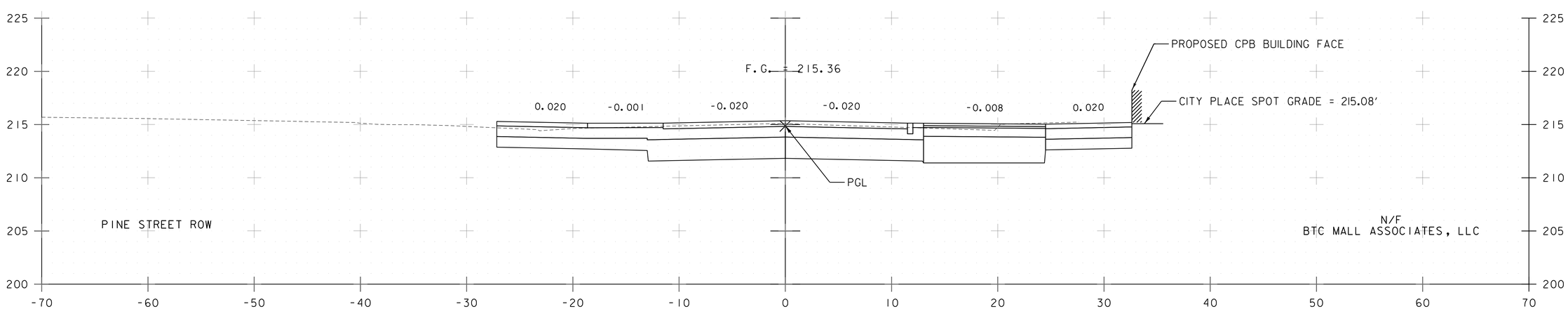

18+50

CHERRY STREET CROSS SECTIONS

PROJECT NAME: CITY OF BURLINGTON
PROJECT NUMBER: 195311541

Stantec

FILE NAME: 11541xs.dgn
PROJECT LEADER: G. EDWARDS
DESIGNED BY: K. RICHARDSON
CROSS SECTIONS 20

PLOT DATE: 6/29/2018
DRAWN BY: G. MERKLE
CHECKED BY: G. GOYETTE
SHEET 47 OF 91

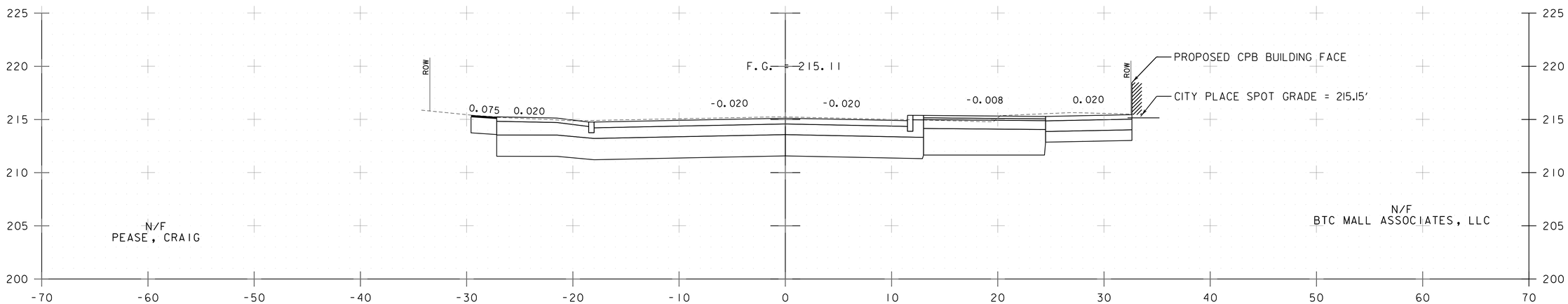

19+00

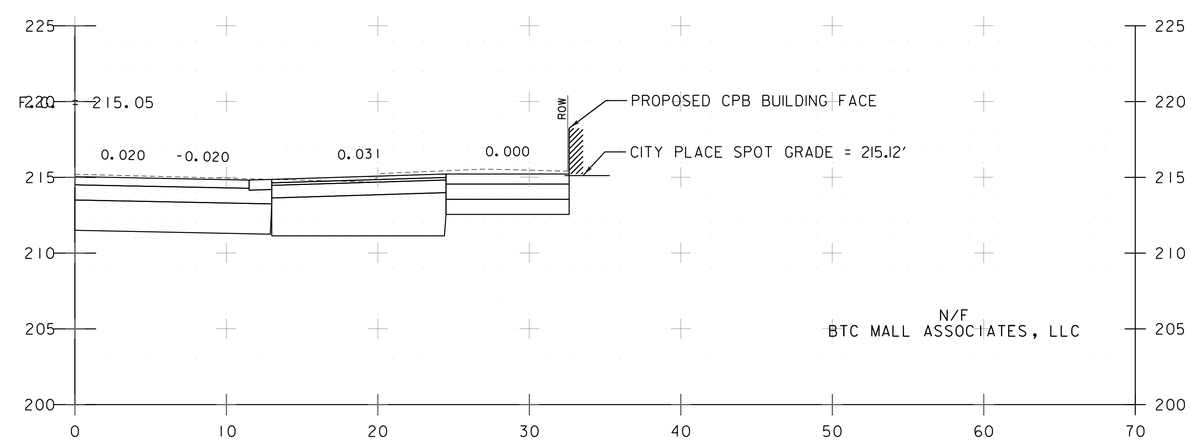

18+87

CHERRY STREET CROSS SECTIONS

PROJECT NAME: CITY OF BURLINGTON
PROJECT NUMBER: 195311541

Stantec

FILE NAME: 11541xs.dgn
PROJECT LEADER: G. EDWARDS
DESIGNED BY: K. RICHARDSON
CROSS SECTIONS 21

PLOT DATE: 6/29/2018
DRAWN BY: G. MERKLE
CHECKED BY: G. GOYETTE
SHEET 48 OF 91

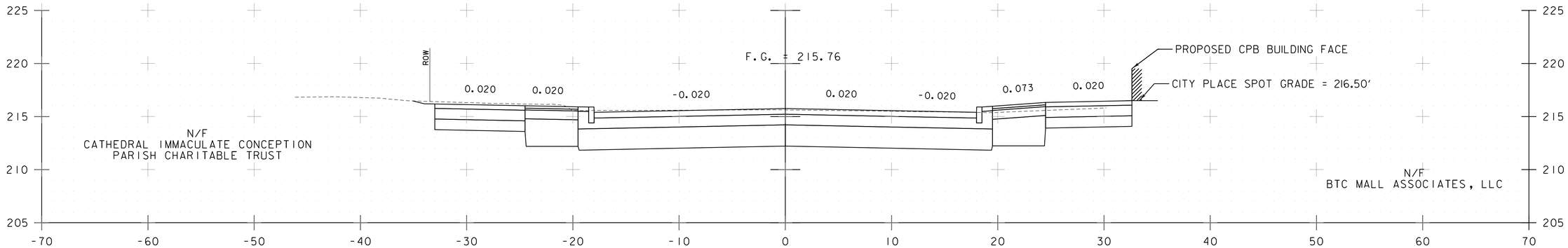

19+75

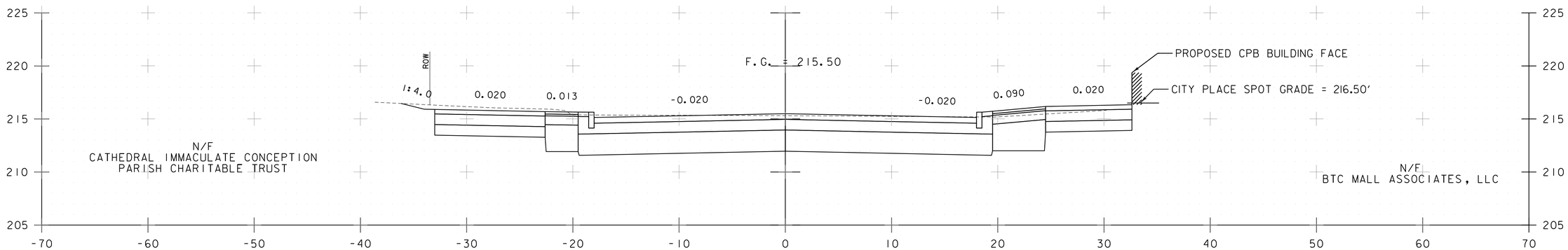

19+50

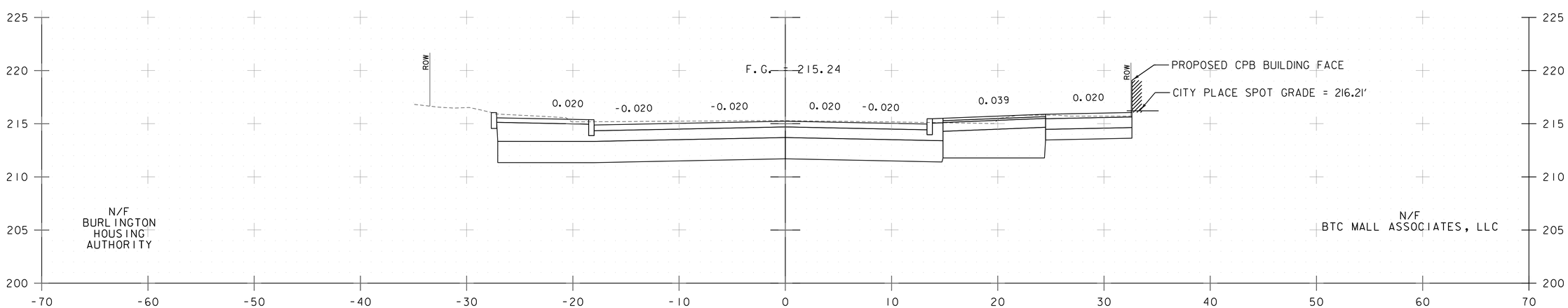

19+25

CHERRY STREET CROSS SECTIONS

PROJECT NAME: CITY OF BURLINGTON	
PROJECT NUMBER: 195311541	
FILE NAME: 11541xs.dgn	PLOT DATE: 6/29/2018
PROJECT LEADER: G. EDWARDS	DRAWN BY: G. MERKLE
DESIGNED BY: K. RICHARDSON	CHECKED BY: G. GOYETTE
CROSS SECTIONS 22	SHEET 49 OF 91

Stantec

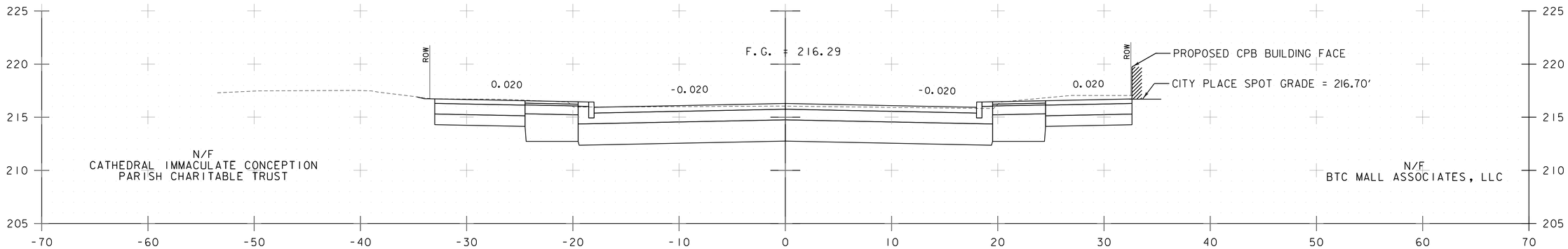

20+50

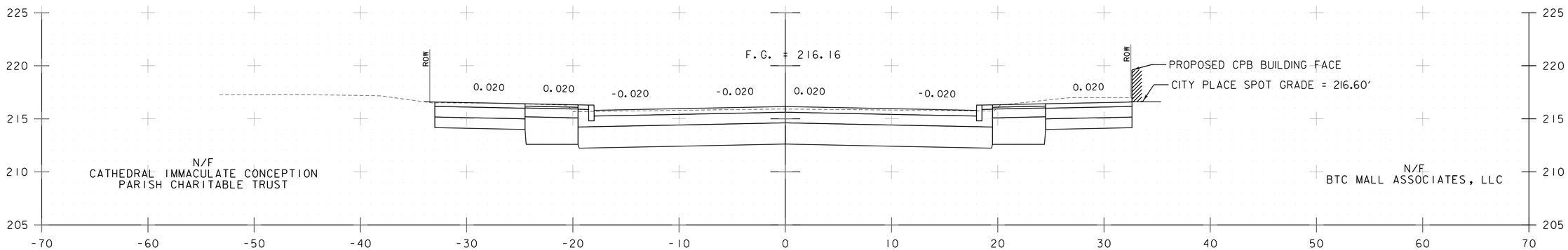

20+25

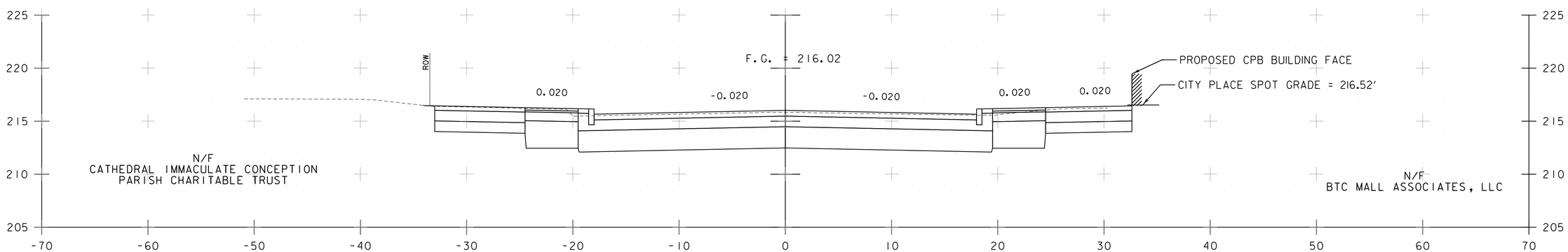

20+00

CHERRY STREET CROSS SECTIONS

PROJECT NAME: CITY OF BURLINGTON	
PROJECT NUMBER: 195311541	
FILE NAME: 1154lxs.dgn	PLOT DATE: 6/29/2018
PROJECT LEADER: G. EDWARDS	DRAWN BY: G. MERKLE
DESIGNED BY: K. RICHARDSON	CHECKED BY: G. GOYETTE
CROSS SECTIONS 23	SHEET 50 OF 91

Stantec

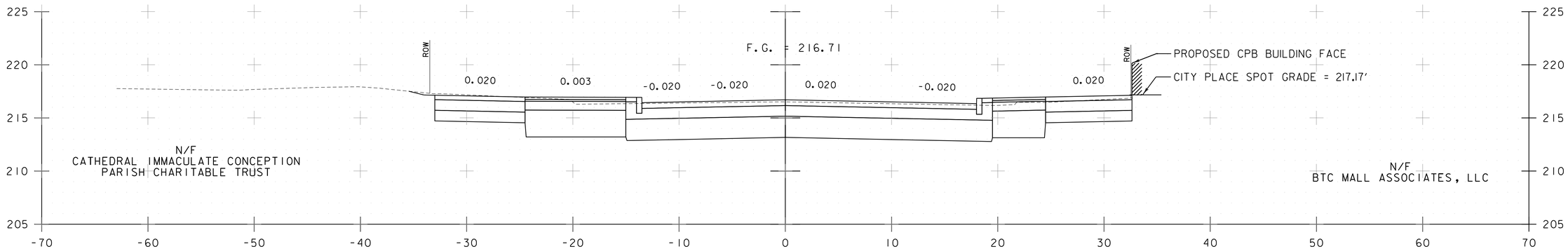

21+25

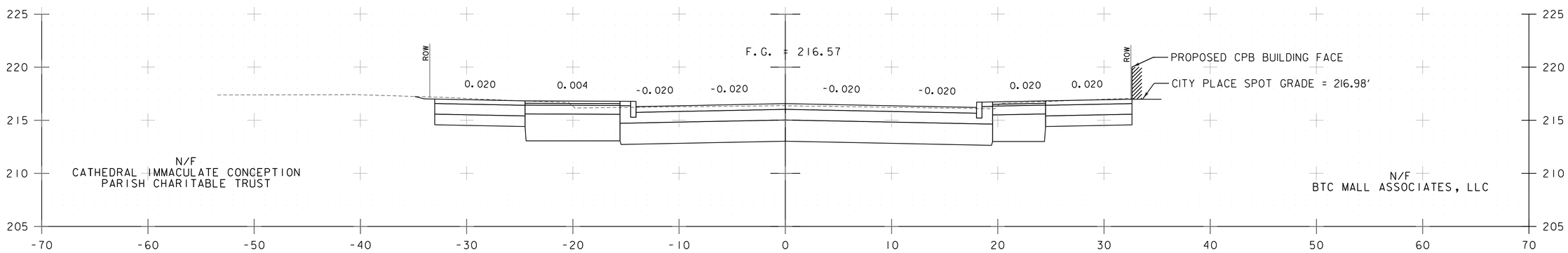

21+00

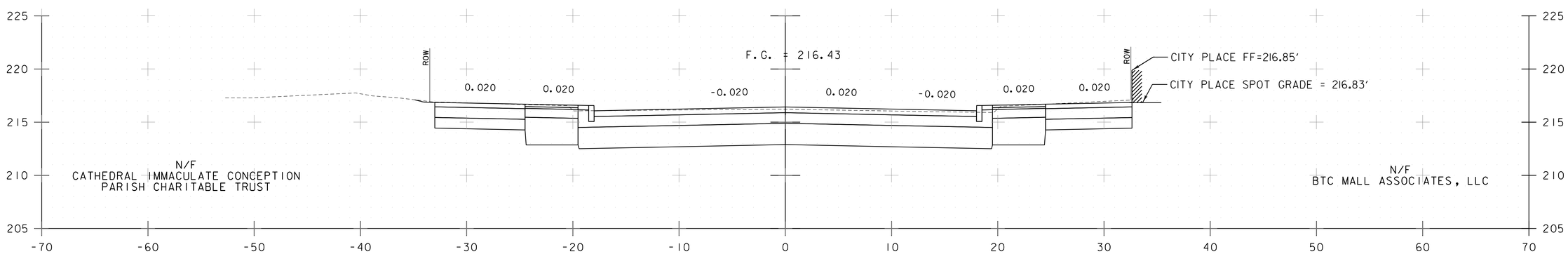

20+75

CHERRY STREET CROSS SECTIONS

PROJECT NAME: CITY OF BURLINGTON
PROJECT NUMBER: 195311541

Stantec

FILE NAME: 11541xs.dgn
PROJECT LEADER: G. EDWARDS
DESIGNED BY: K. RICHARDSON
CROSS SECTIONS 24

PLOT DATE: 6/29/2018
DRAWN BY: G. MERKLE
CHECKED BY: G. GOYETTE
SHEET 51 OF 91

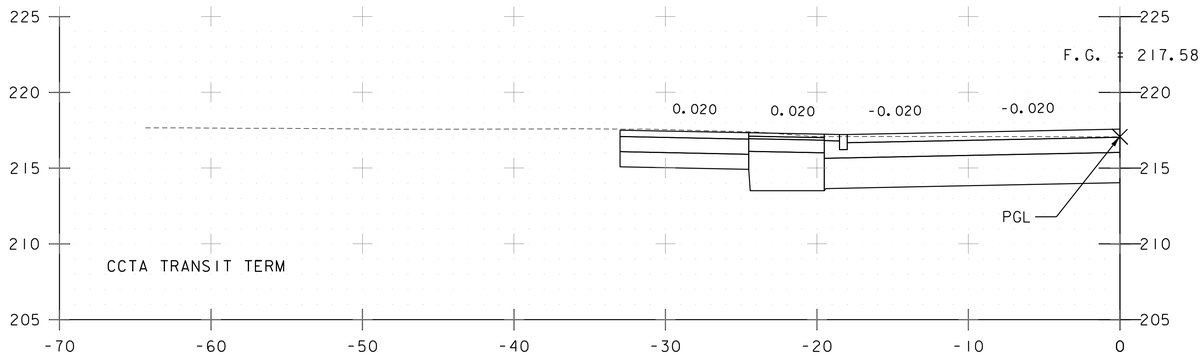

21+91

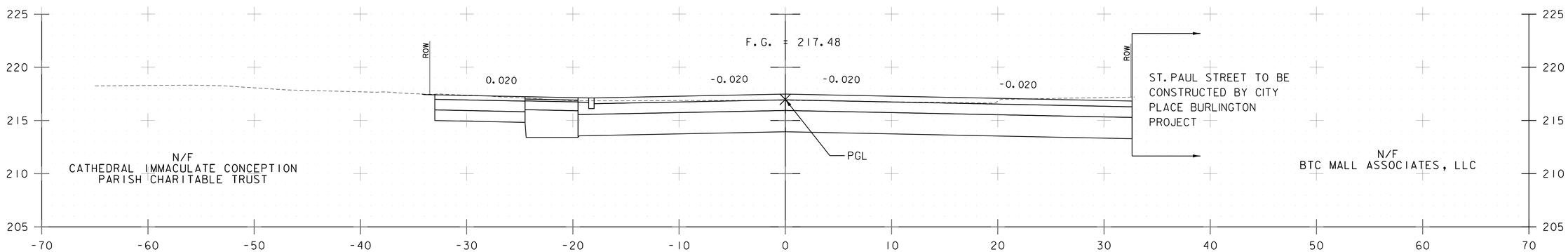

21+75

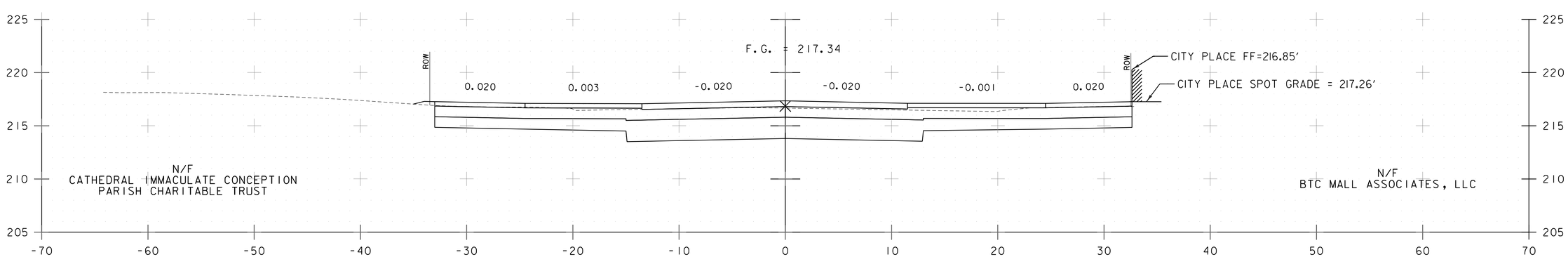

21+50

CHERRY STREET CROSS SECTIONS

PROJECT NAME: CITY OF BURLINGTON	
PROJECT NUMBER: 195311541	
FILE NAME: 1154lxs.dgn	PLOT DATE: 6/29/2018
PROJECT LEADER: G. EDWARDS	DRAWN BY: G. MERKLE
DESIGNED BY: K. RICHARDSON	CHECKED BY: G. GOYETTE
CROSS SECTIONS 25	SHEET 52 OF 91

Stantec

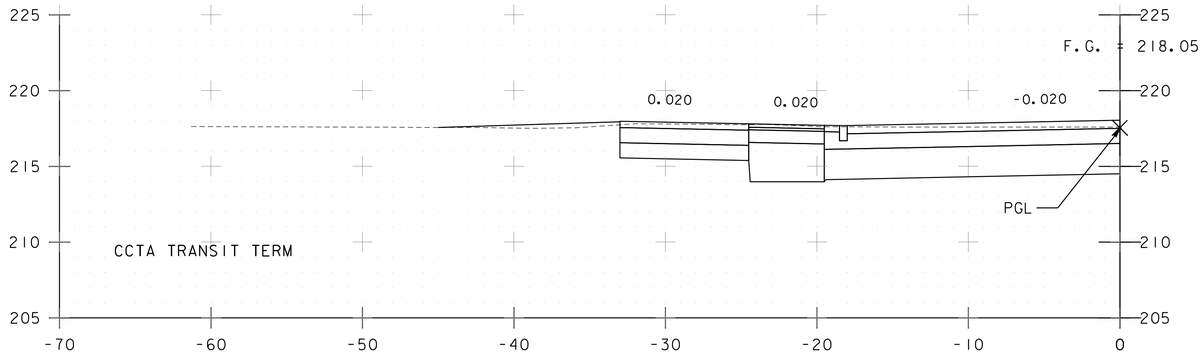

22+42

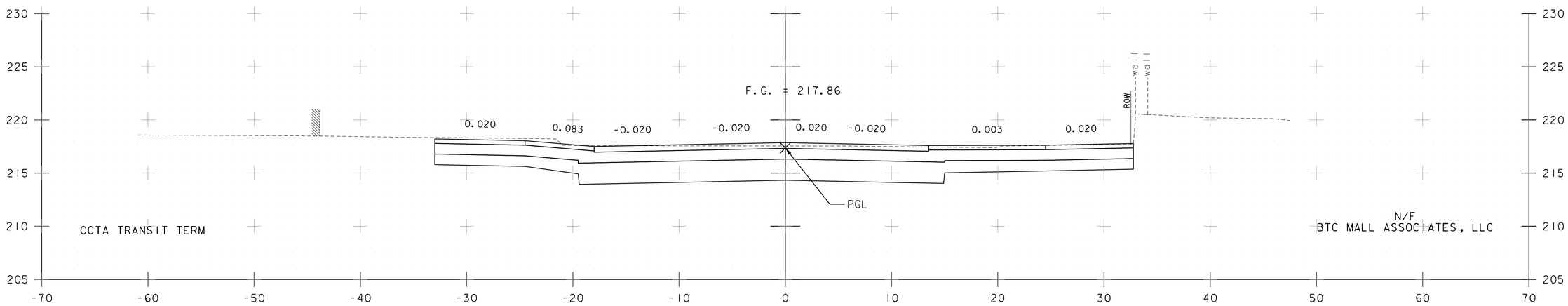

22+25

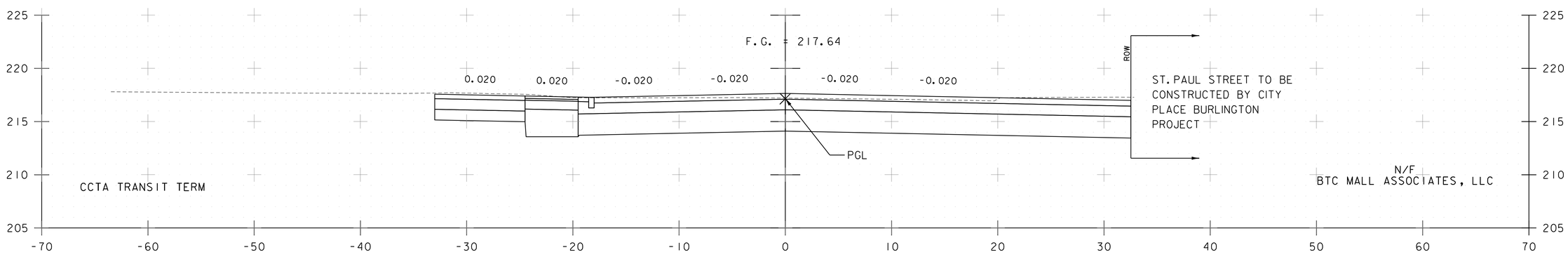

22+00

CHERRY STREET CROSS SECTIONS

PROJECT NAME: CITY OF BURLINGTON	
PROJECT NUMBER: 195311541	
FILE NAME: 11541xs.dgn	PLOT DATE: 6/29/2018
PROJECT LEADER: G. EDWARDS	DRAWN BY: G. MERKLE
DESIGNED BY: K. RICHARDSON	CHECKED BY: G. GOYETTE
CROSS SECTIONS 26	SHEET 53 OF 91

Stantec

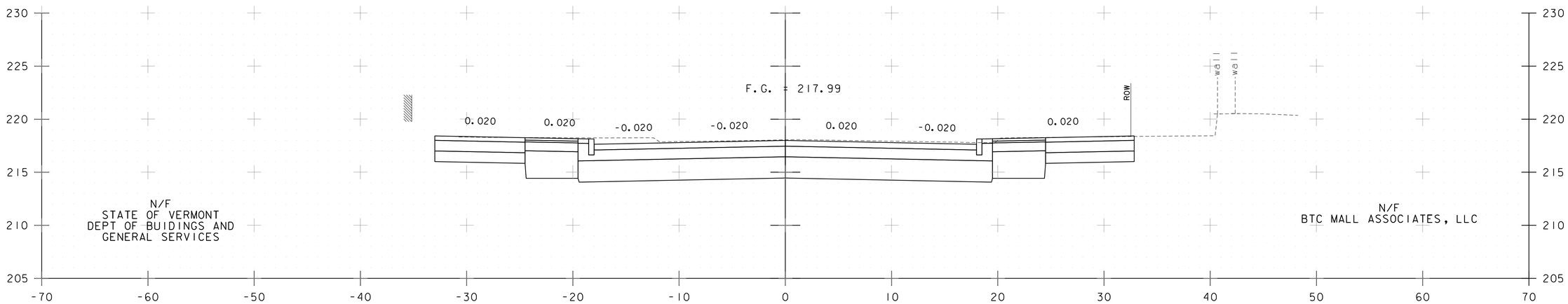

22+75

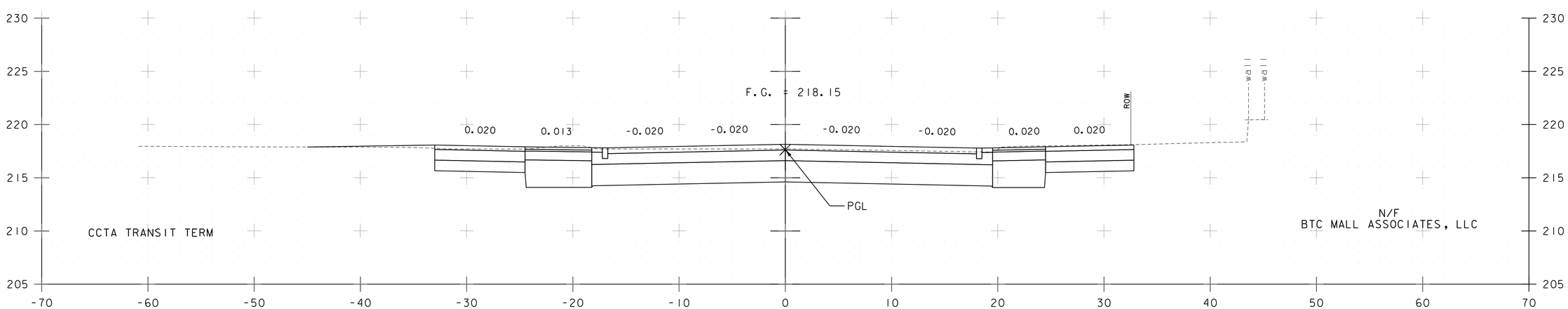

22+50

CHERRY STREET CROSS SECTIONS

PROJECT NAME: CITY OF BURLINGTON
PROJECT NUMBER: 195311541

Stantec

FILE NAME: 11541xs.dgn
PROJECT LEADER: G. EDWARDS
DESIGNED BY: K. RICHARDSON
CROSS SECTIONS 27

PLOT DATE: 6/29/2018
DRAWN BY: G. MERKLE
CHECKED BY: G. GOYETTE
SHEET 54 OF 91

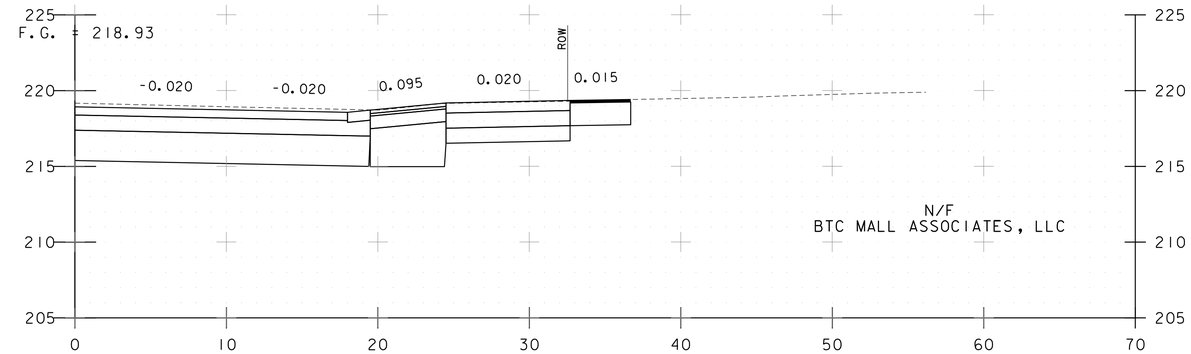

23+28

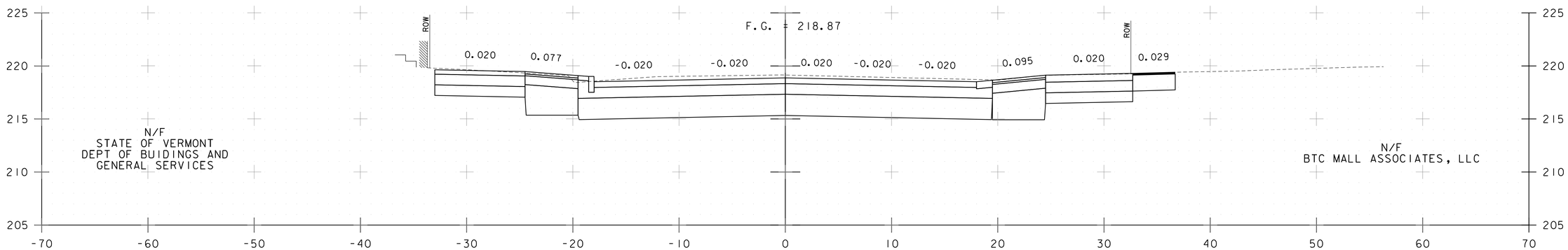

23+25

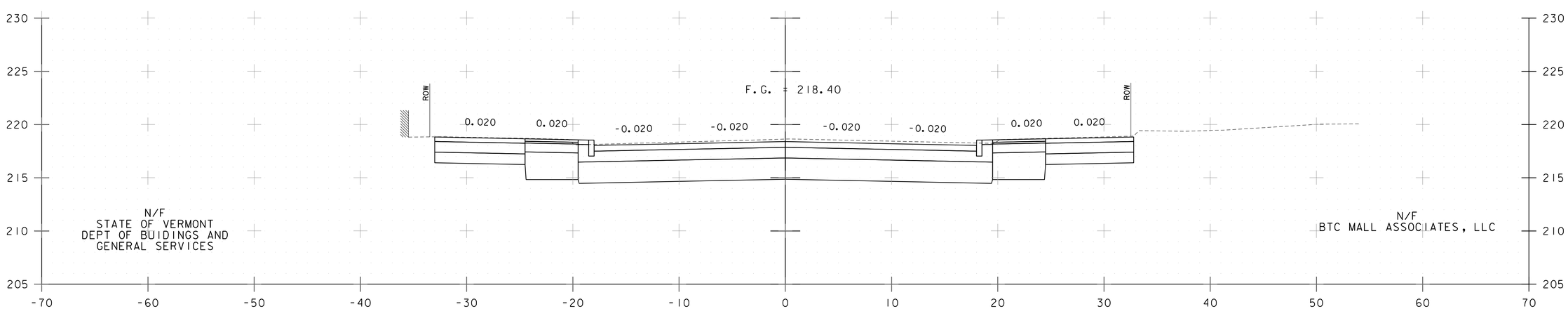

23+00

CHERRY STREET CROSS SECTIONS

PROJECT NAME: CITY OF BURLINGTON
PROJECT NUMBER: 195311541

Stantec

FILE NAME: 11541xs.dgn
PROJECT LEADER: G. EDWARDS
DESIGNED BY: K. RICHARDSON
CROSS SECTIONS 28

PLOT DATE: 6/29/2018
DRAWN BY: G. MERKLE
CHECKED BY: G. GOYETTE
SHEET 55 OF 91

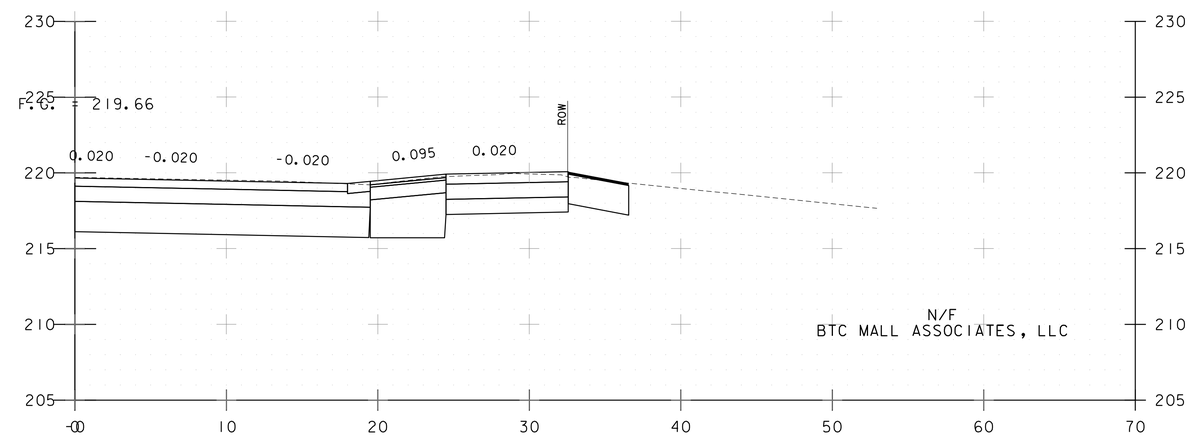

23+64

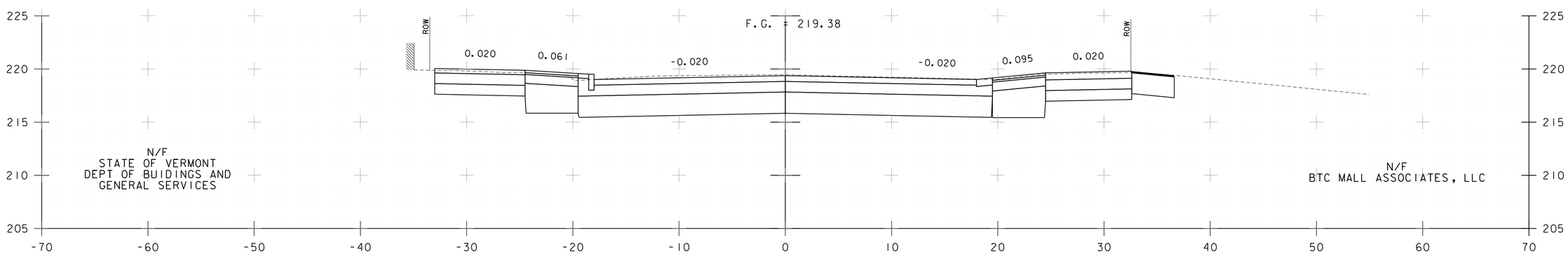

23+50

CHERRY STREET CROSS SECTIONS

PROJECT NAME: CITY OF BURLINGTON	
PROJECT NUMBER: 195311541	
FILE NAME: 11541xs.dgn	PLOT DATE: 6/29/2018
PROJECT LEADER: G. EDWARDS	DRAWN BY: G. MERKLE
DESIGNED BY: K. RICHARDSON	CHECKED BY: G. GOYETTE
CROSS SECTIONS 29	SHEET 56 OF 91

Stantec

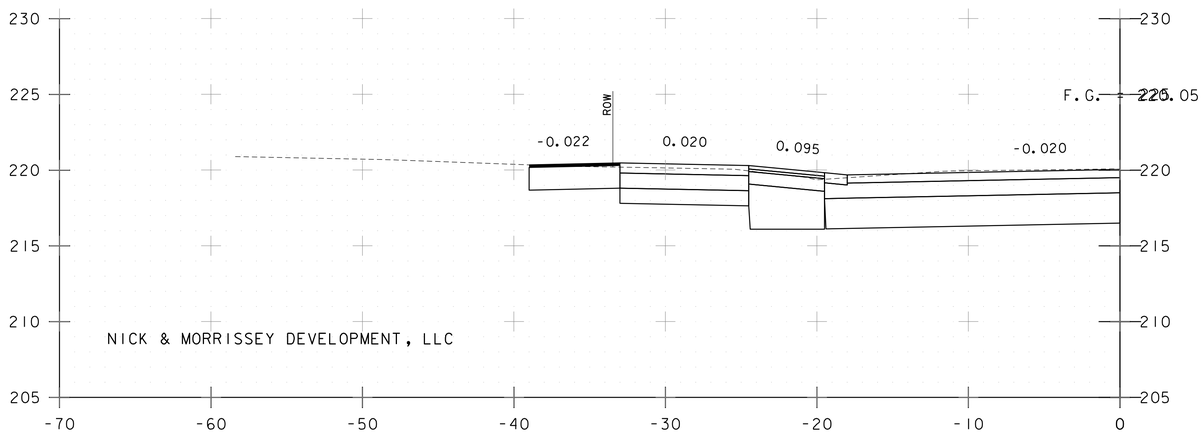

23+83

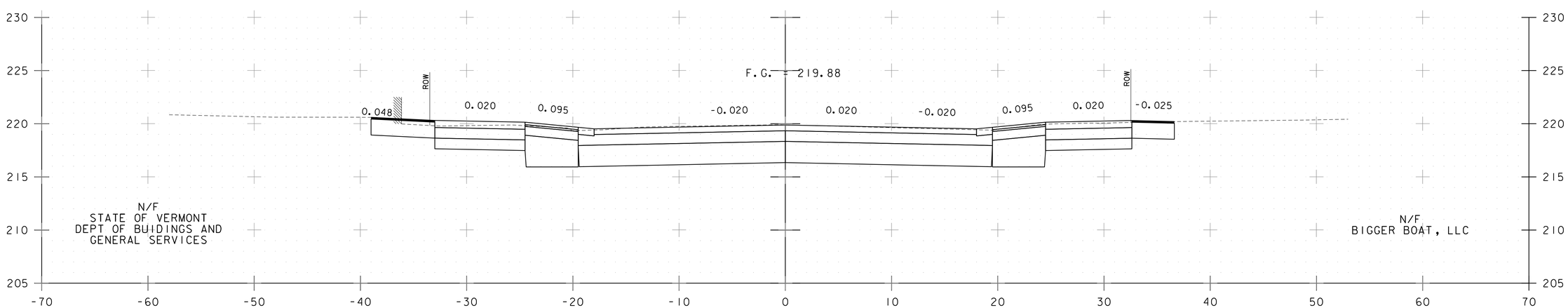

23+75

CHERRY STREET CROSS SECTIONS

PROJECT NAME: CITY OF BURLINGTON	
PROJECT NUMBER: 195311541	
FILE NAME: 11541xs.dgn	PLOT DATE: 6/29/2018
PROJECT LEADER: G. EDWARDS	DRAWN BY: G. MERKLE
DESIGNED BY: K. RICHARDSON	CHECKED BY: G. GOYETTE
CROSS SECTIONS 30	SHEET 57 OF 91

Stantec

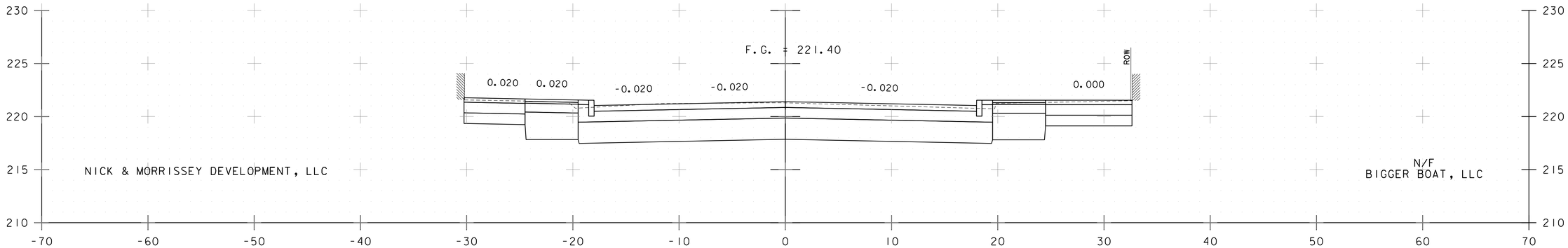

24+50

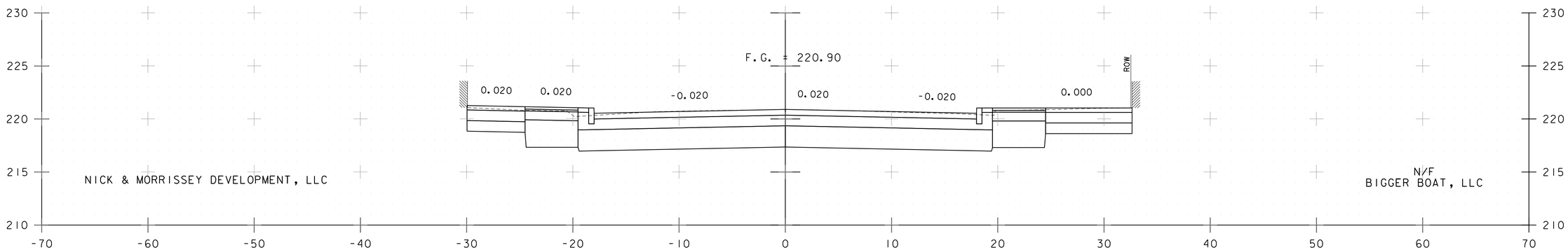

24+25

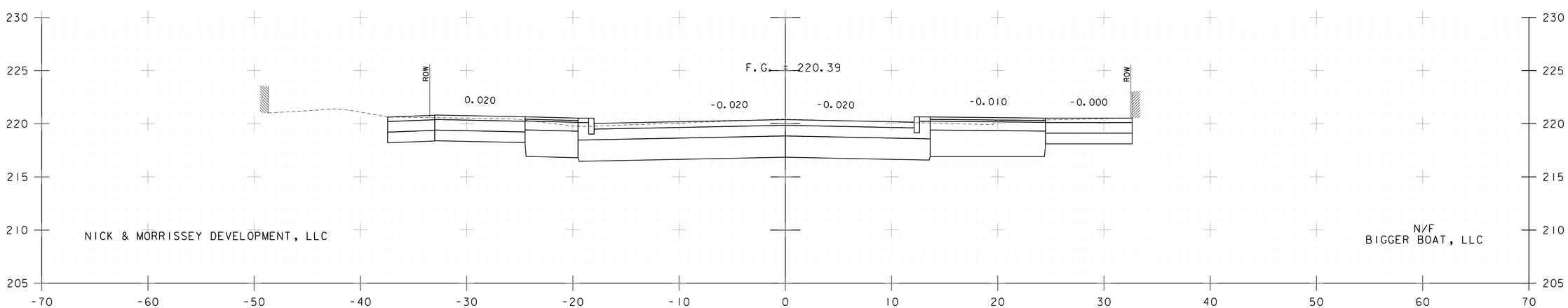

24+00

CHERRY STREET CROSS SECTIONS

PROJECT NAME: CITY OF BURLINGTON	
PROJECT NUMBER: 195311541	
FILE NAME: 11541xs.dgn	PLOT DATE: 6/29/2018
PROJECT LEADER: G. EDWARDS	DRAWN BY: G. MERKLE
DESIGNED BY: K. RICHARDSON	CHECKED BY: G. GOYETTE
CROSS SECTIONS 31	SHEET 58 OF 91

Stantec

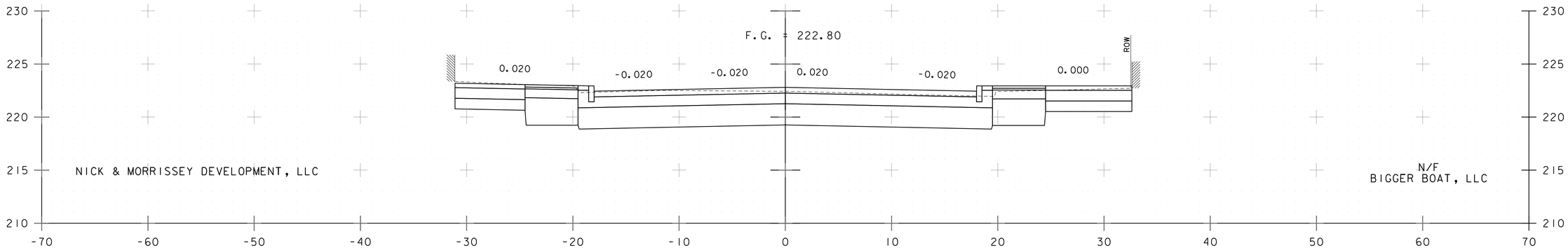

25+25

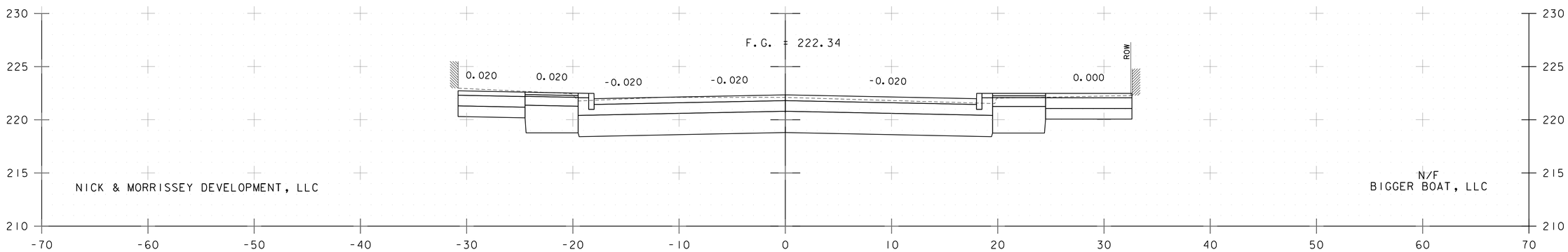

25+00

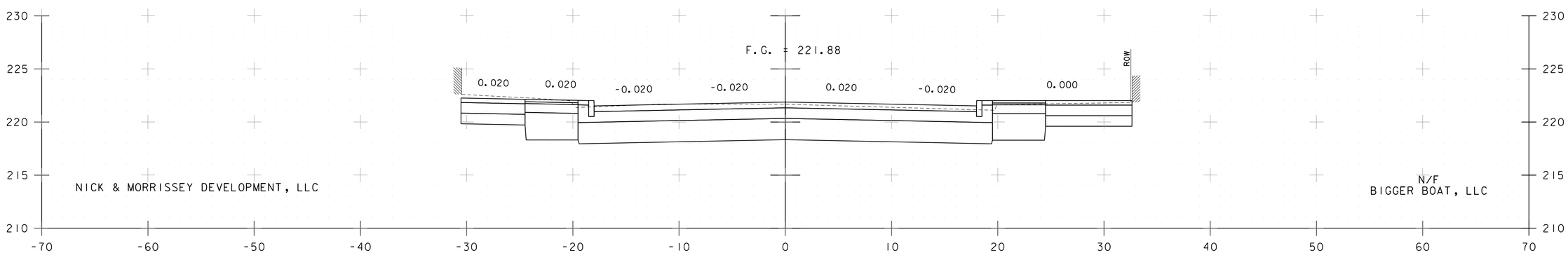

24+75

CHERRY STREET CROSS SECTIONS

PROJECT NAME: CITY OF BURLINGTON
PROJECT NUMBER: 195311541

Stantec

FILE NAME: 11541xs.dgn
PROJECT LEADER: G. EDWARDS
DESIGNED BY: K. RICHARDSON
CROSS SECTIONS 32

PLOT DATE: 6/29/2018
DRAWN BY: G. MERKLE
CHECKED BY: G. GOYETTE
SHEET 59 OF 91

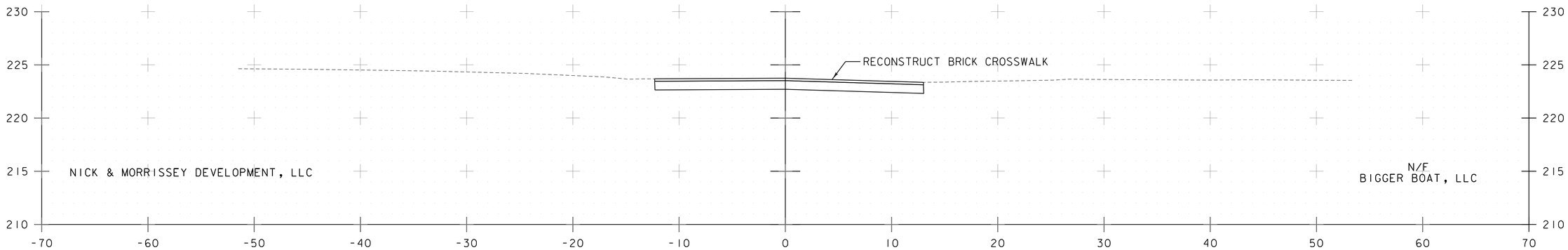

26+00

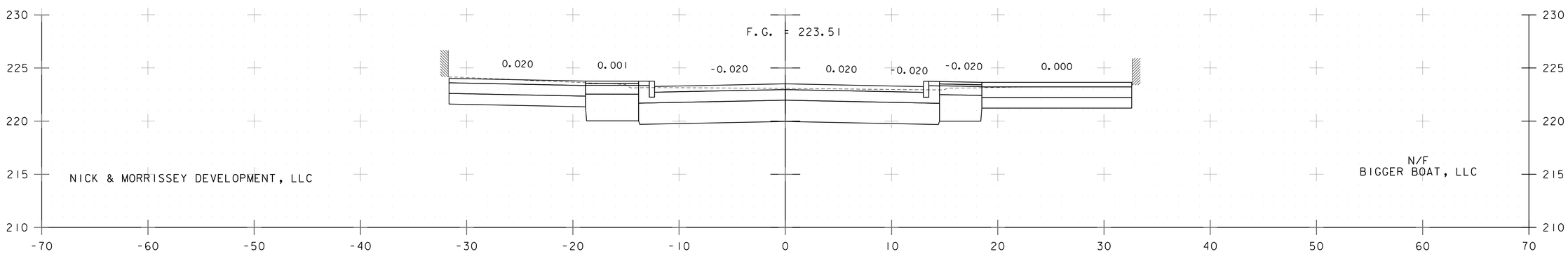

25+75

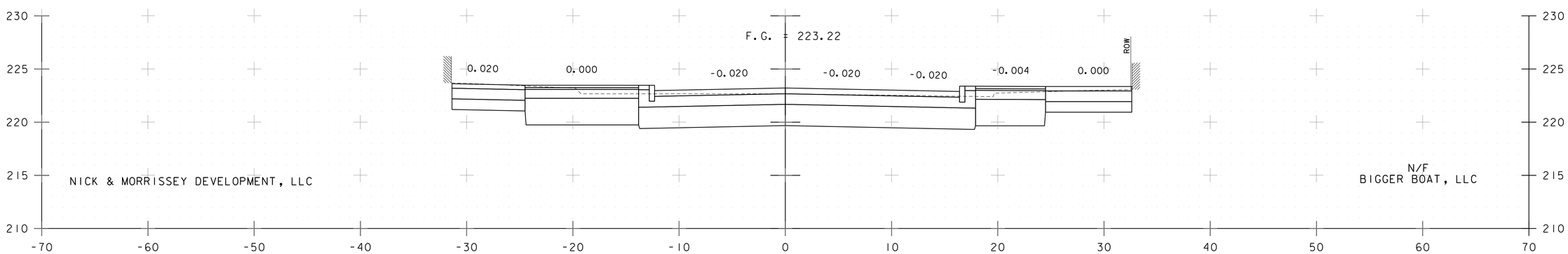

25+50

CHERRY STREET CROSS SECTIONS

PROJECT NAME: CITY OF BURLINGTON	
PROJECT NUMBER: 195311541	
FILE NAME: 11541xs.dgn	PLOT DATE: 6/29/2018
PROJECT LEADER: G. EDWARDS	DRAWN BY: G. MERKLE
DESIGNED BY: K. RICHARDSON	CHECKED BY: G. GOYETTE
CROSS SECTIONS 33	SHEET 60 OF 91

Stantec

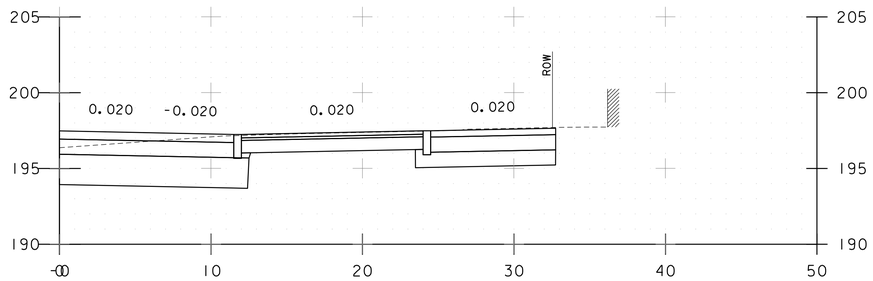

12+93
41 CHERRY STREET
HOTEL VERMONT

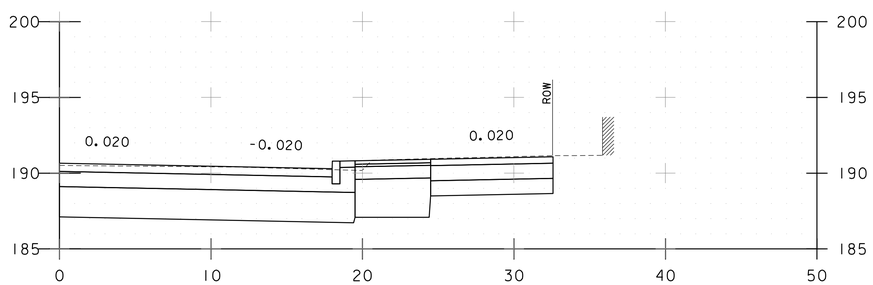

11+37
25 CHERRY STREET
COURTYARD BY MARRIOT BURLINGTON HARBOR

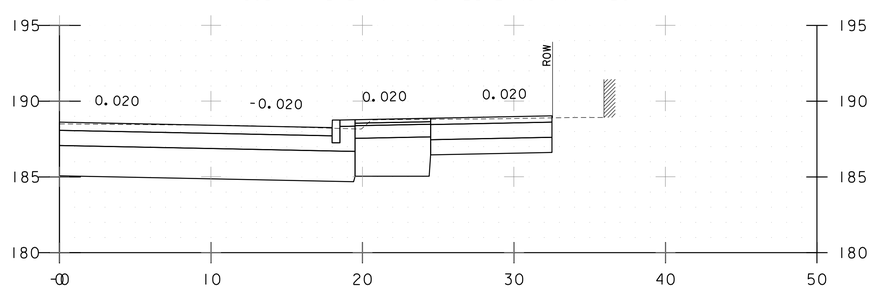

10+85
25 CHERRY STREET
COURTYARD BY MARRIOT BURLINGTON HARBOR

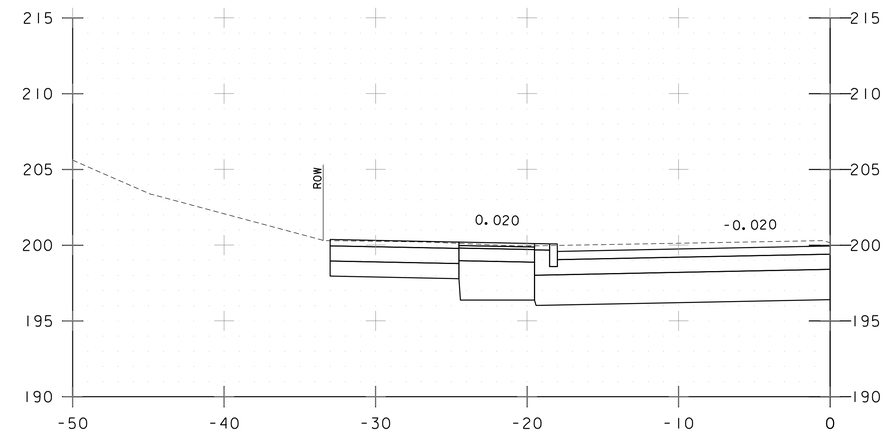

13+94
32 CHERRY STREET
COSTELLO COURTHOUSE

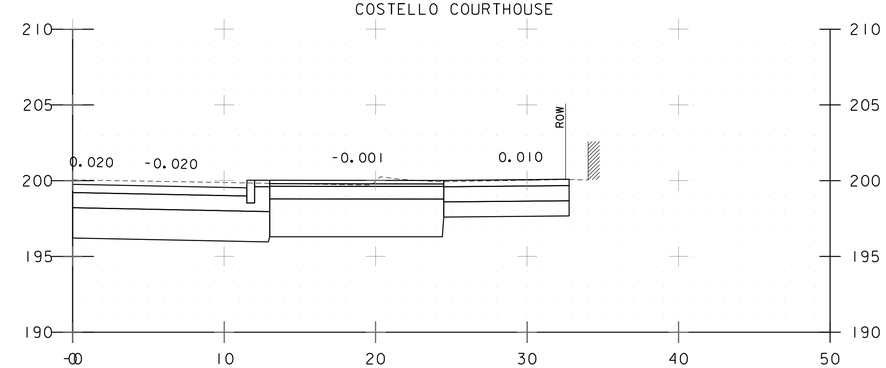

13+88
41 CHERRY STREET
HOTEL VERMONT

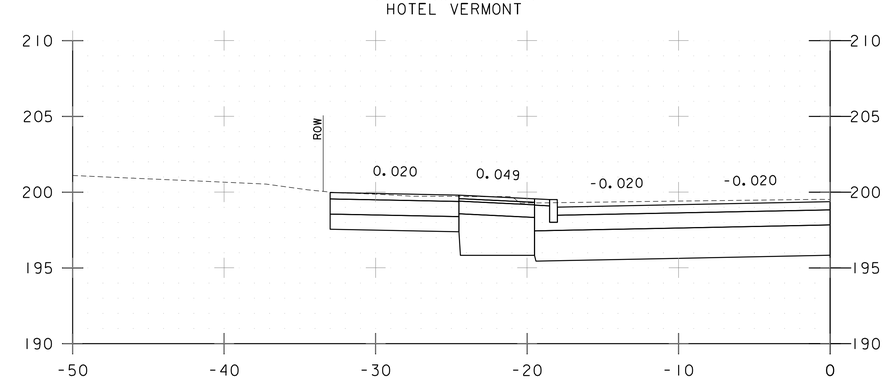

13+75
16 CHERRY STREET

CHERRY STREET SILLS SECTIONS

PROJECT NAME: CITY OF BURLINGTON
PROJECT NUMBER: 195311541

Stantec

FILE NAME: 1154lxs.dgn
PROJECT LEADER: G. EDWARDS
DESIGNED BY: K. RICHARDSON
CROSS SECTIONS 34

PLOT DATE: 6/29/2018
DRAWN BY: G. MERKLE
CHECKED BY: G. GOYETTE
SHEET 61 OF 91

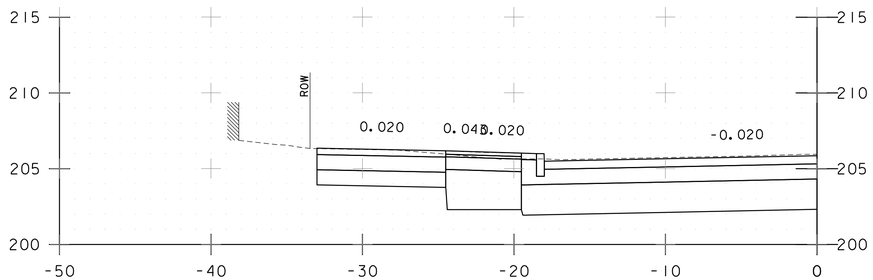

15+47
32 CHERRY STREET
COSTELLO COURTHOUSE

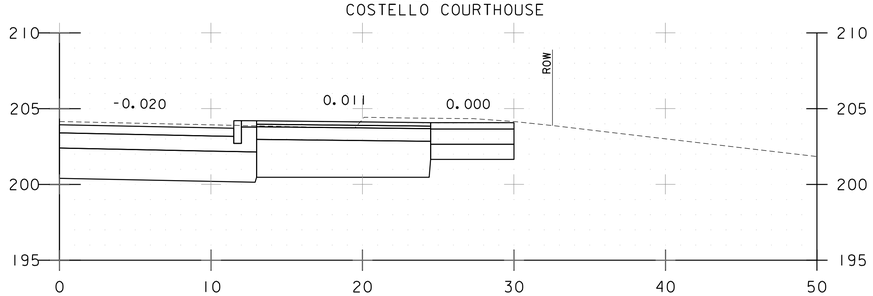

14+98
57 CHERRY STREET
MACY'S

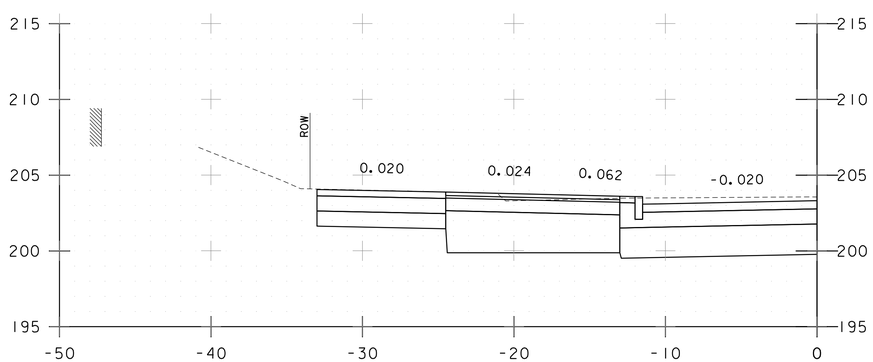

14+82
32 CHERRY STREET
COSTELLO COURTHOUSE

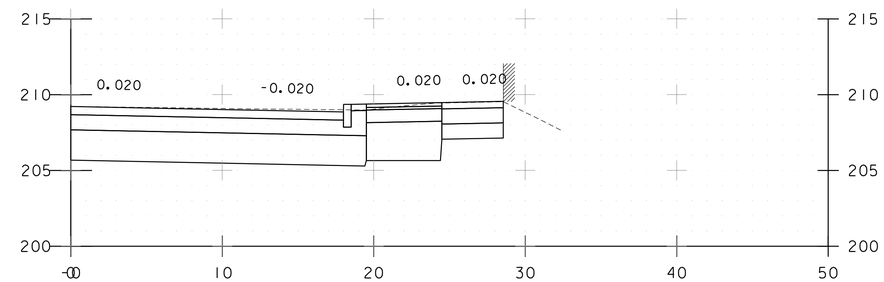

16+33
57 CHERRY STREET
MACY'S

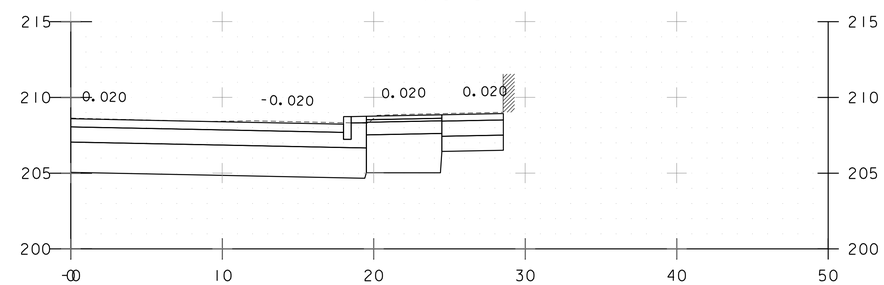

16+17
57 CHERRY STREET
MACY'S

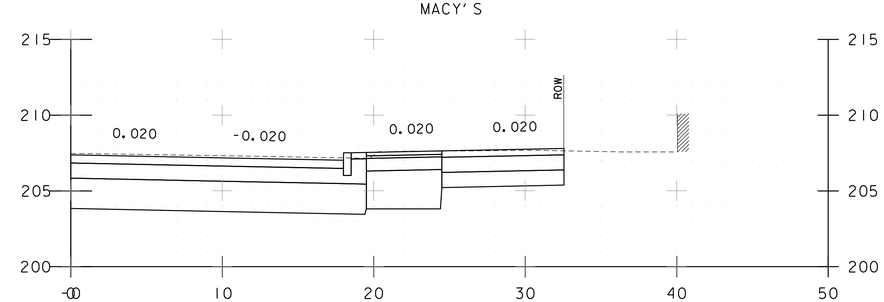

15+86
57 CHERRY STREET
MACY'S

Stantec

CHERRY STREET SILLS SECTIONS

PROJECT NAME: CITY OF BURLINGTON	
PROJECT NUMBER: 195311541	
FILE NAME: 11541xs.dgn	PLOT DATE: 6/29/2018
PROJECT LEADER: G. EDWARDS	DRAWN BY: G. MERKLE
DESIGNED BY: K. RICHARDSON	CHECKED BY: G. GOYETTE
CROSS SECTIONS 35	SHEET 62 OF 91

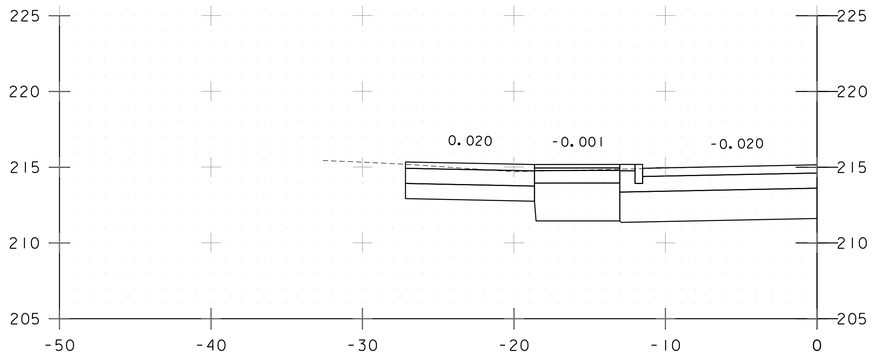

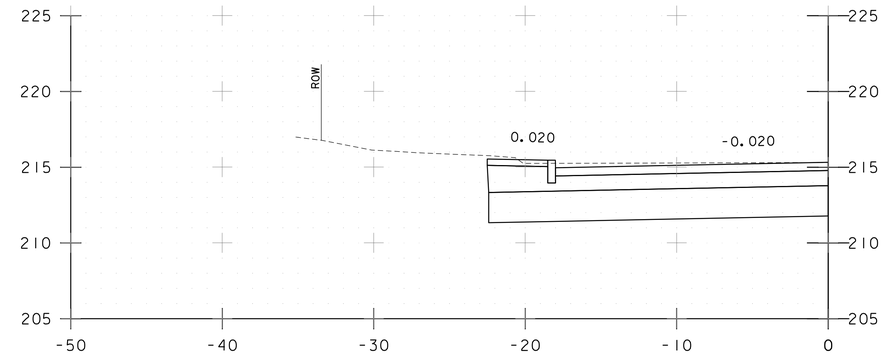

18+60
70-72 CHERRY STREET

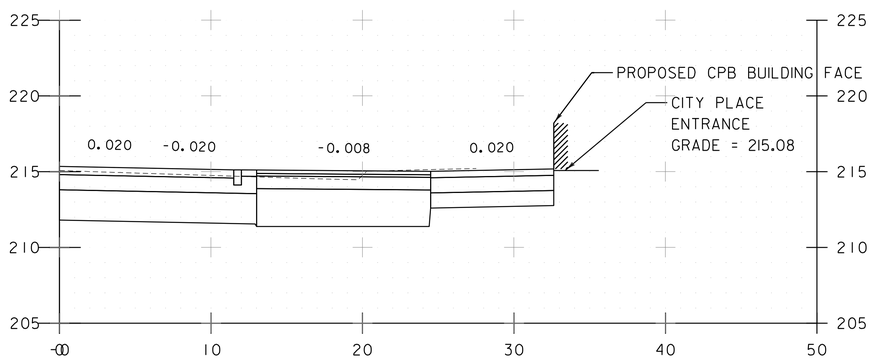

19+33
76 CHERRY STREET

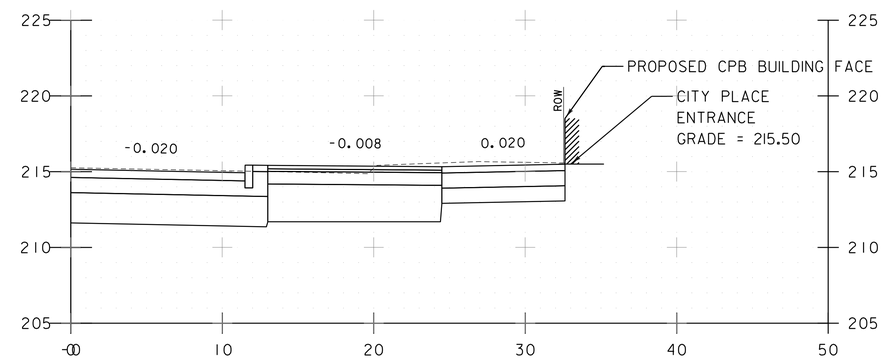

18+47
CITY PLACE
BURLINGTON

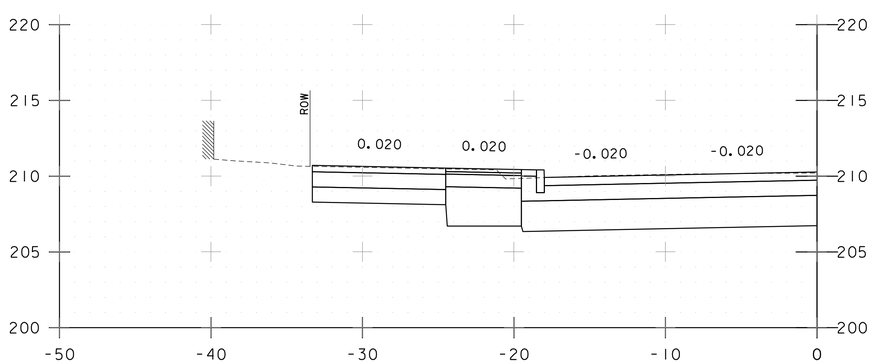

19+09
CITY PLACE
BURLINGTON

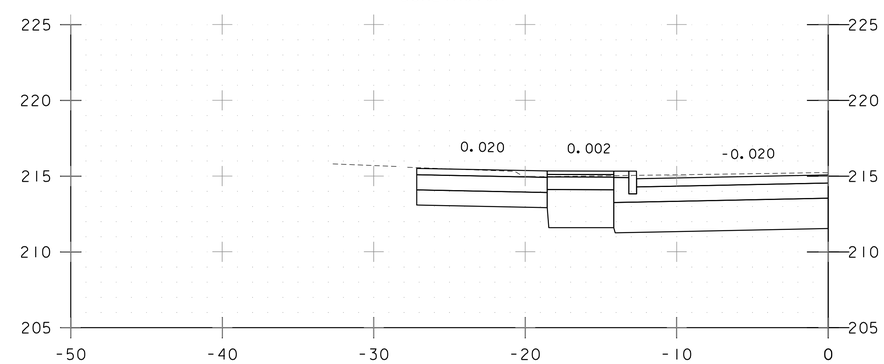

16+60
50-56 CHERRY STREET
COMMUNITY CORRECTIONAL SERVICES CENTER

18+94
70-72 CHERRY STREET

Stantec

CHERRY STREET SILLS SECTIONS

PROJECT NAME: CITY OF BURLINGTON
PROJECT NUMBER: 195311541

FILE NAME: 11541xs.dgn
PROJECT LEADER: G. EDWARDS
DESIGNED BY: K. RICHARDSON
CROSS SECTIONS 36

PLOT DATE: 6/29/2018
DRAWN BY: G. MERKLE
CHECKED BY: G. GOYETTE
SHEET 63 OF 91

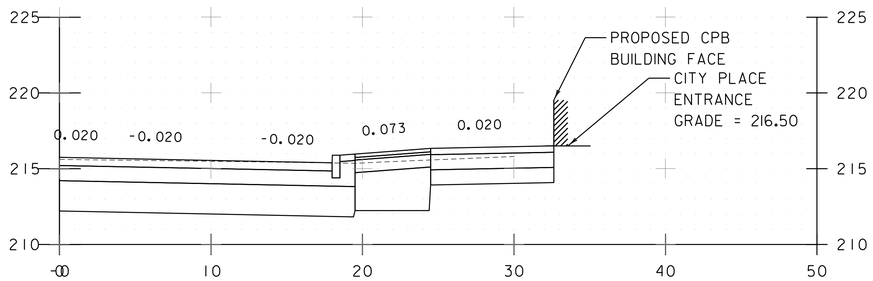

19+74
CITY PLACE
BURLINGTON

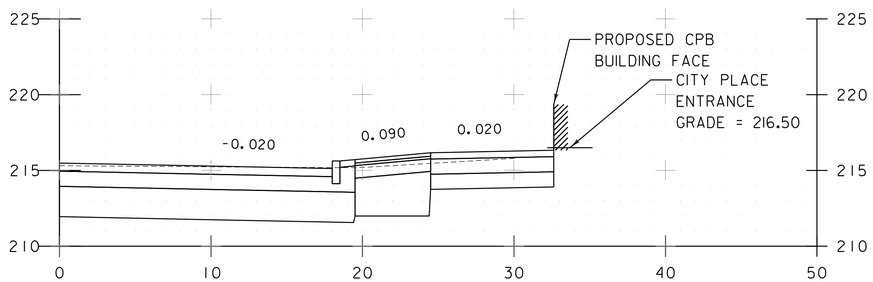

19+49
CITY PLACE
BURLINGTON

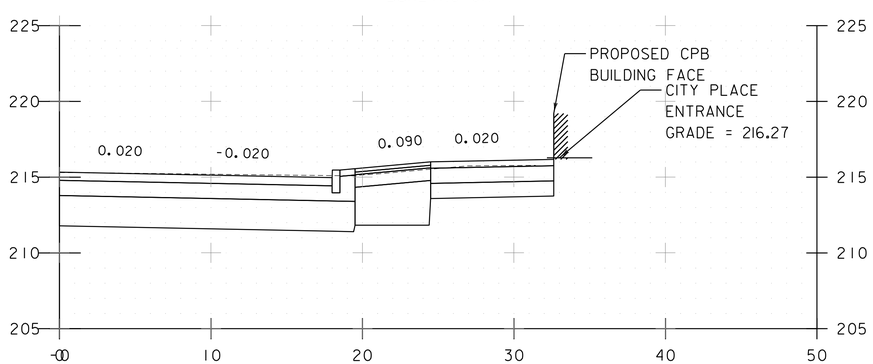

19+34
CITY PLACE
BURLINGTON

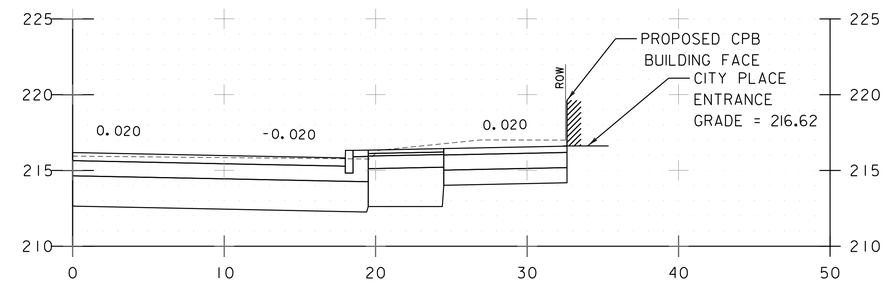

20+30
CITY PLACE
BURLINGTON

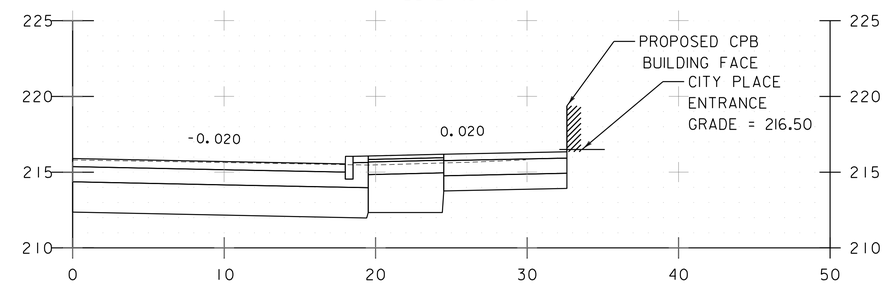

19+89
CITY PLACE
BURLINGTON

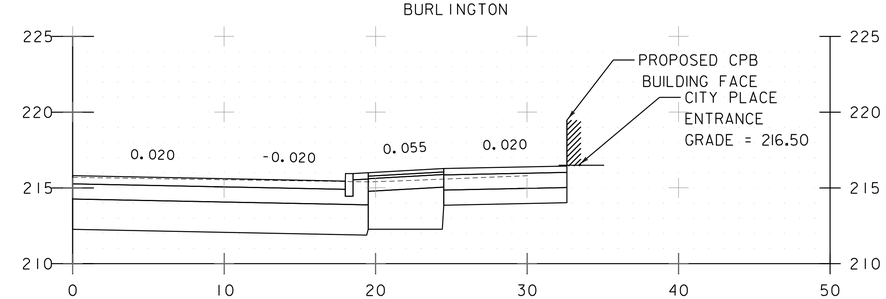

19+80
CITY PLACE
BURLINGTON

CHERRY STREET SILLS SECTIONS

PROJECT NAME: CITY OF BURLINGTON	
PROJECT NUMBER: 195311541	
FILE NAME: 11541xs.dgn	PLOT DATE: 6/29/2018
PROJECT LEADER: G. EDWARDS	DRAWN BY: G. MERKLE
DESIGNED BY: K. RICHARDSON	CHECKED BY: G. GOYETTE
CROSS SECTIONS 37	SHEET 64 OF 91

Stantec

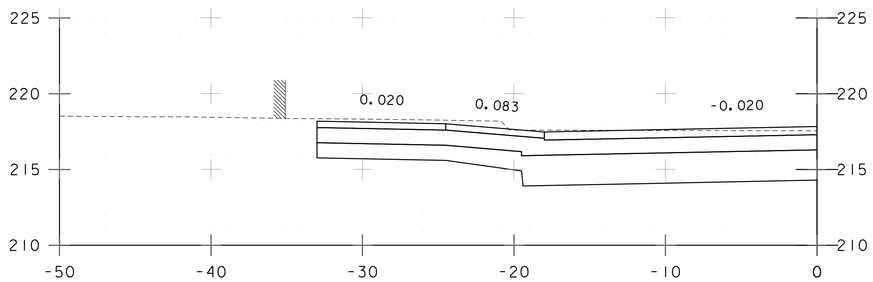

22+22
DOWNTOWN TRANSIT CENTER

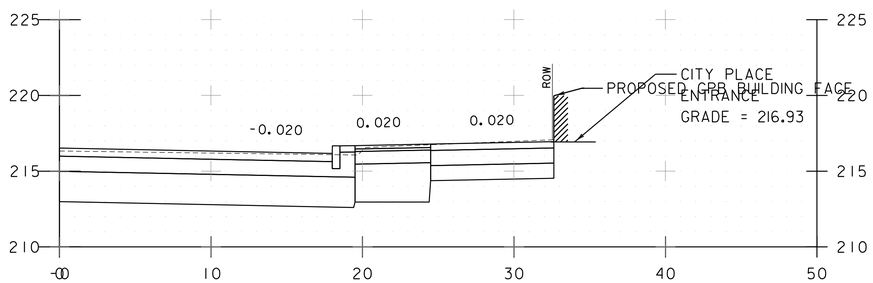

20+93
CITY PLACE
BURLINGTON

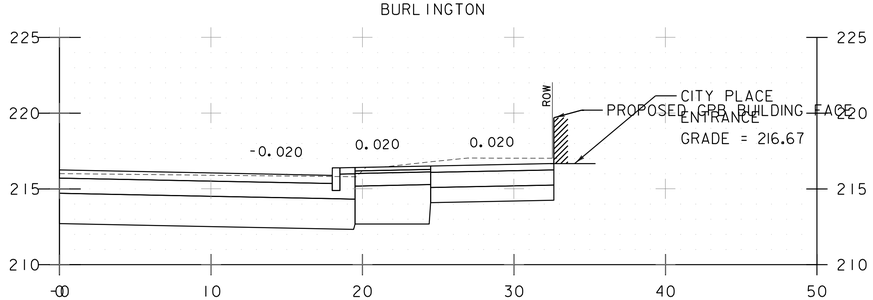

20+43
CITY PLACE
BURLINGTON

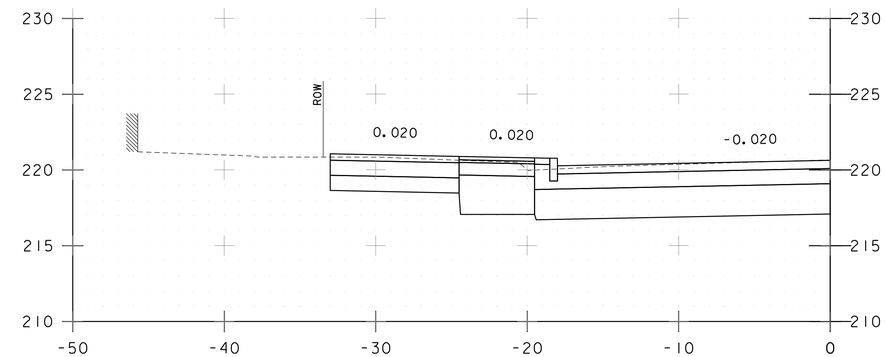

24+12
110 CHERRY STREET
CHURCH & CHERRY

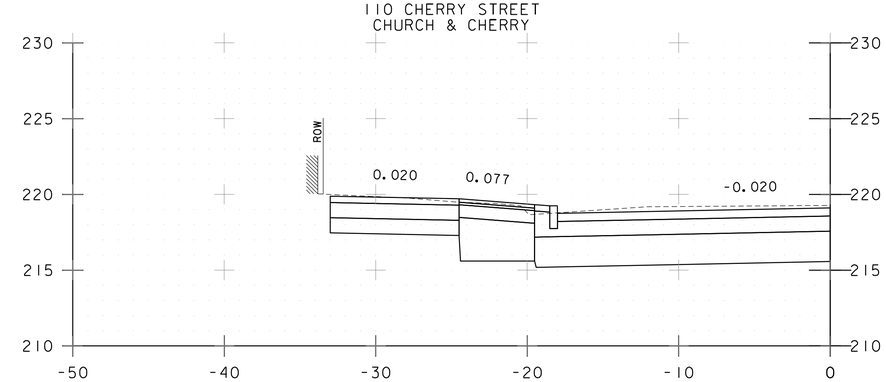

23+37
108 CHERRY STREET
VERMONT DEPARTMENT OF HEALTH

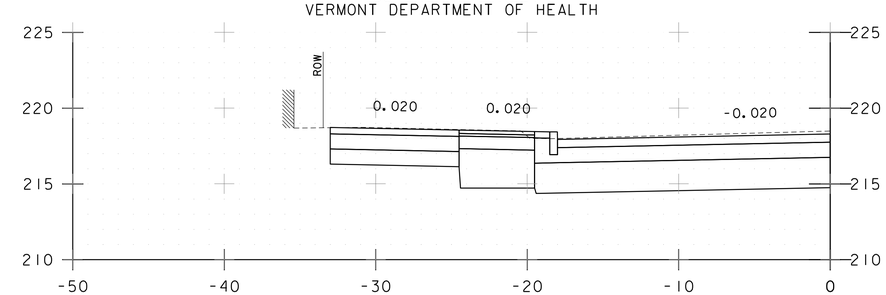

22+94
108 CHERRY STREET
VERMONT DEPARTMENT OF HEALTH

Stantec

CHERRY STREET SILLS SECTIONS

PROJECT NAME: CITY OF BURLINGTON
PROJECT NUMBER: 195311541

FILE NAME: 11541xs.dgn
PROJECT LEADER: G. EDWARDS
DESIGNED BY: K. RICHARDSON
CROSS SECTIONS 38

PLOT DATE: 6/29/2018
DRAWN BY: G. MERKLE
CHECKED BY: G. GOYETTE
SHEET 65 OF 91

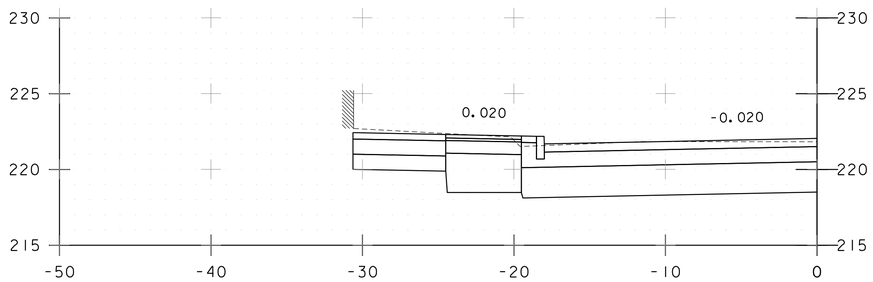

24+84
110 CHERRY STREET
CHURCH & CHERRY

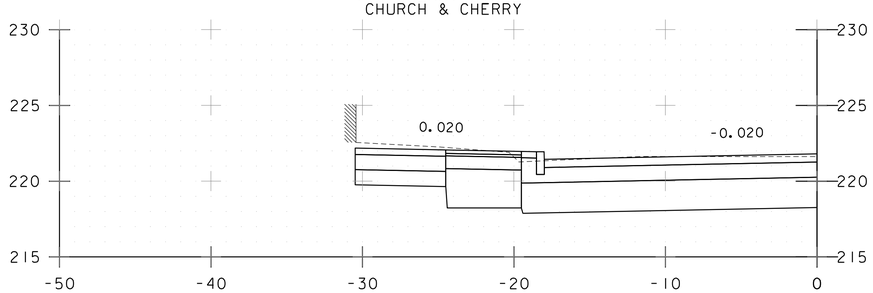

24+71
110 CHERRY STREET
CHURCH & CHERRY

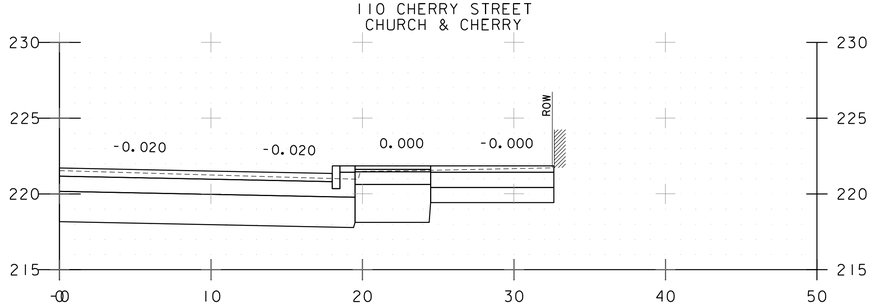

24+66
37-43 CHURCH STREET
OUTDOOR GEAR EXCHANGE

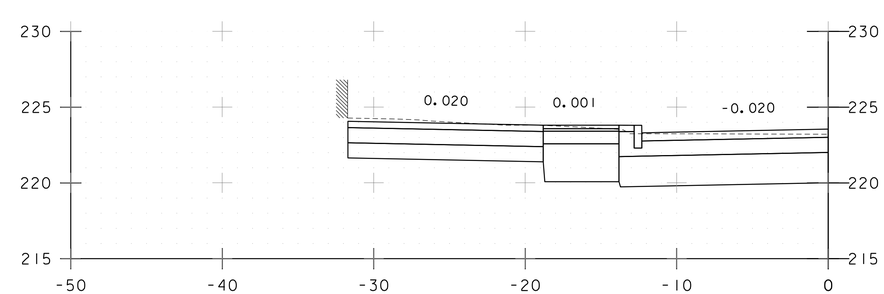

25+79
110 CHERRY STREET
CVS PHARMACY

Stantec

CHERRY STREET SILLS SECTIONS

PROJECT NAME: CITY OF BURLINGTON
PROJECT NUMBER: 195311541

FILE NAME: 11541xs.dgn
PROJECT LEADER: G. EDWARDS
DESIGNED BY: K. RICHARDSON
CROSS SECTIONS 39

PLOT DATE: 6/29/2018
DRAWN BY: G. MERKLE
CHECKED BY: G. GOYETTE
SHEET 66 OF 91

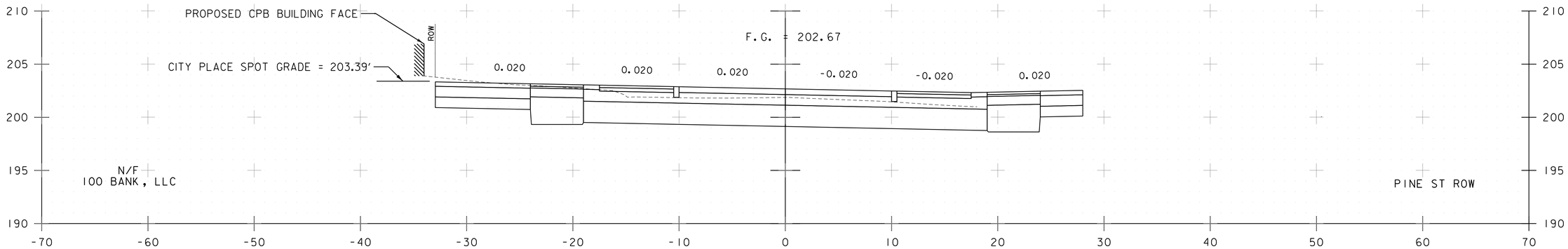

50+50

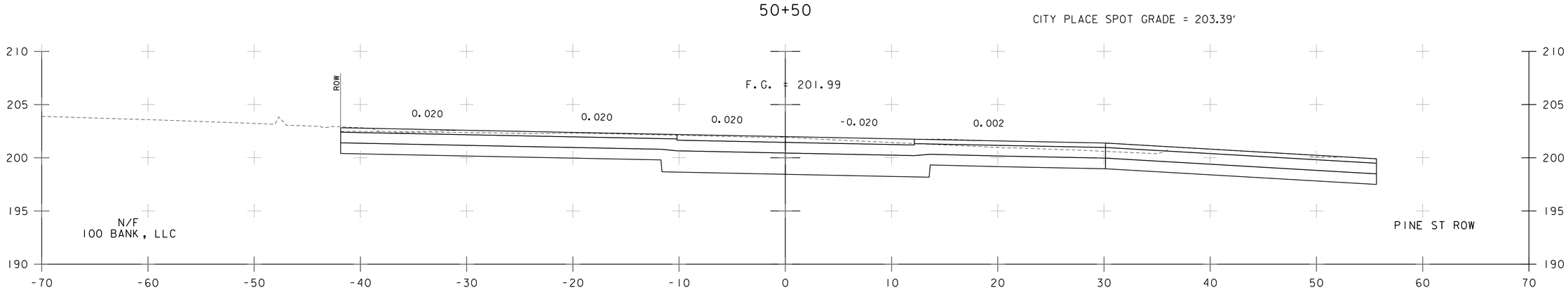

50+25

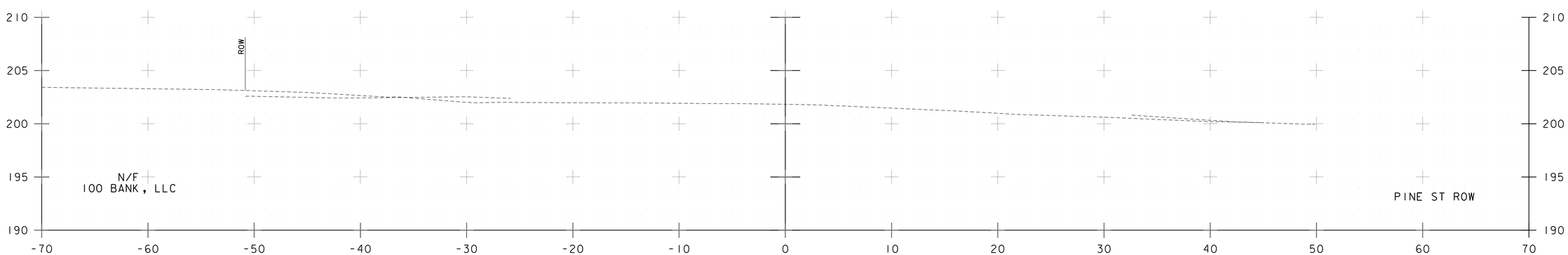

50+15

BANK STREET CROSS SECTIONS

PROJECT NAME: CITY OF BURLINGTON	
PROJECT NUMBER: 195311541	
FILE NAME: 11541xs.dgn	PLOT DATE: 6/29/2018
PROJECT LEADER: G. EDWARDS	DRAWN BY: G. MERKLE
DESIGNED BY: K. RICHARDSON	CHECKED BY: G. GOYETTE
CROSS SECTIONS 40	SHEET 67 OF 91

Stantec

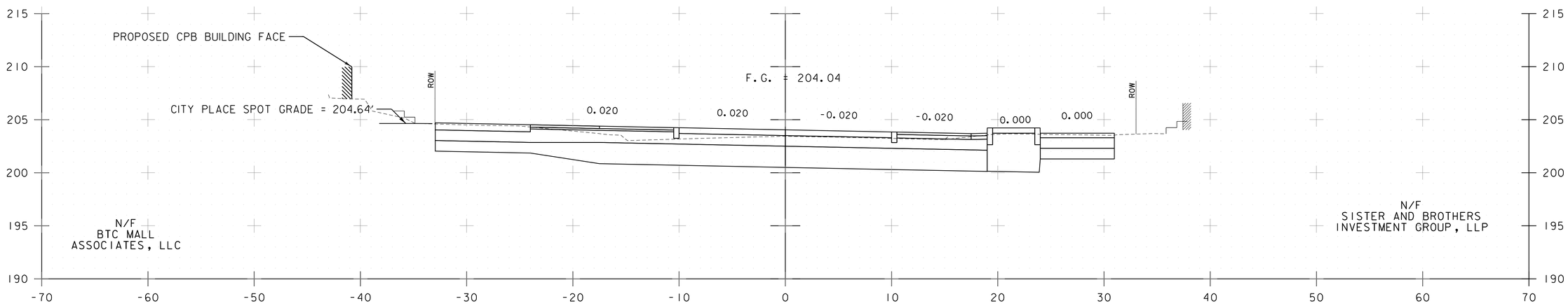

51+00

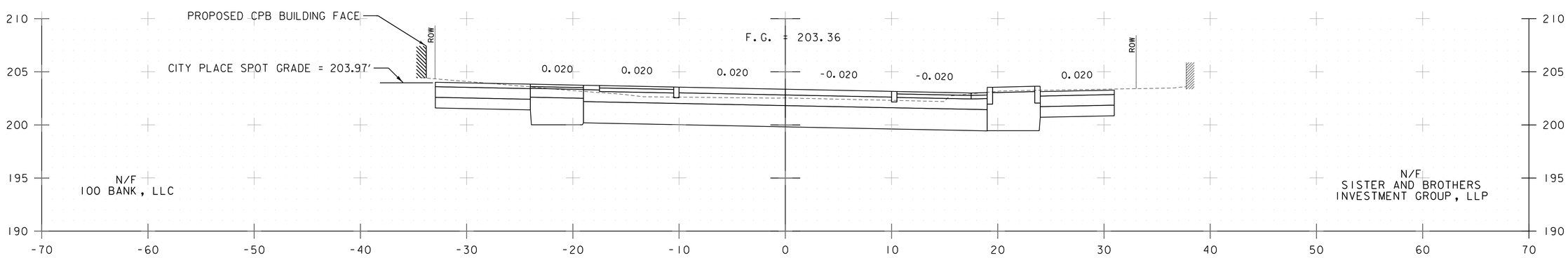

50+75

BANK STREET CROSS SECTIONS

PROJECT NAME: CITY OF BURLINGTON	
PROJECT NUMBER: 195311541	
FILE NAME: 11541xs.dgn	PLOT DATE: 6/29/2018
PROJECT LEADER: G. EDWARDS	DRAWN BY: G. MERKLE
DESIGNED BY: K. RICHARDSON	CHECKED BY: G. GOYETTE
CROSS SECTIONS 41	SHEET 68 OF 91

Stantec

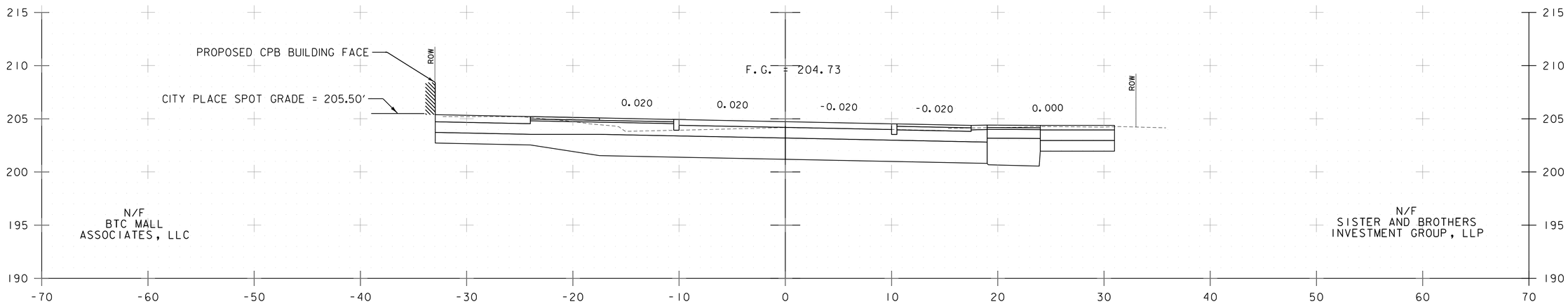

51+25

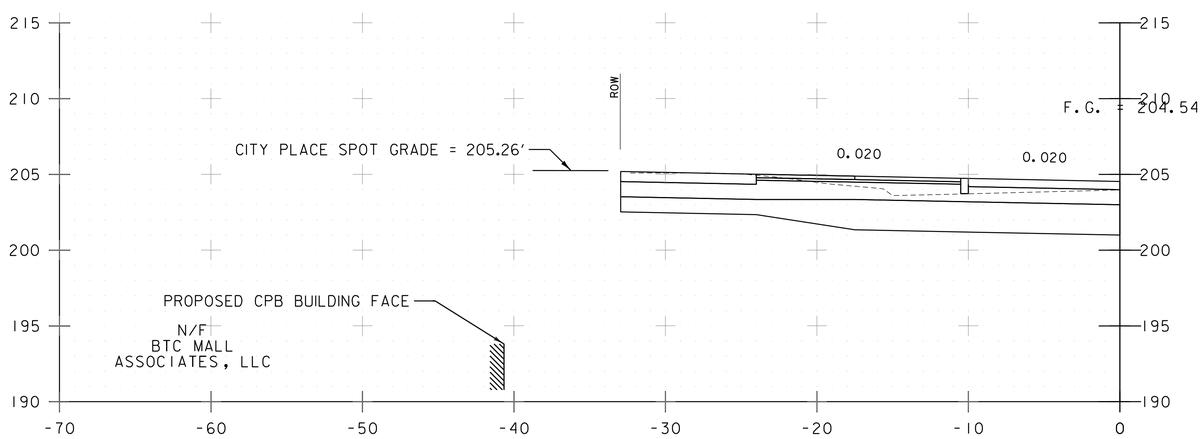

51+18

BANK STREET CROSS SECTIONS

PROJECT NAME: CITY OF BURLINGTON	
PROJECT NUMBER: 195311541	
FILE NAME: 11541xs.dgn	PLOT DATE: 6/29/2018
PROJECT LEADER: G. EDWARDS	DRAWN BY: G. MERKLE
DESIGNED BY: K. RICHARDSON	CHECKED BY: G. GOYETTE
CROSS SECTIONS 42	SHEET 69 OF 91

Stantec

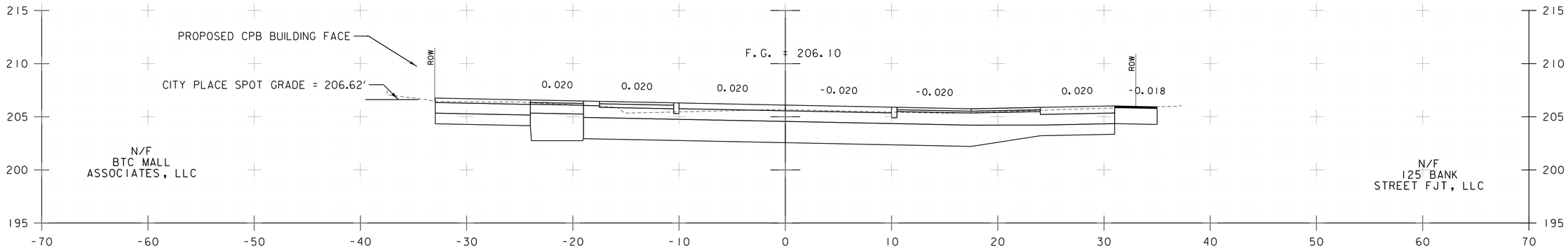

51+75

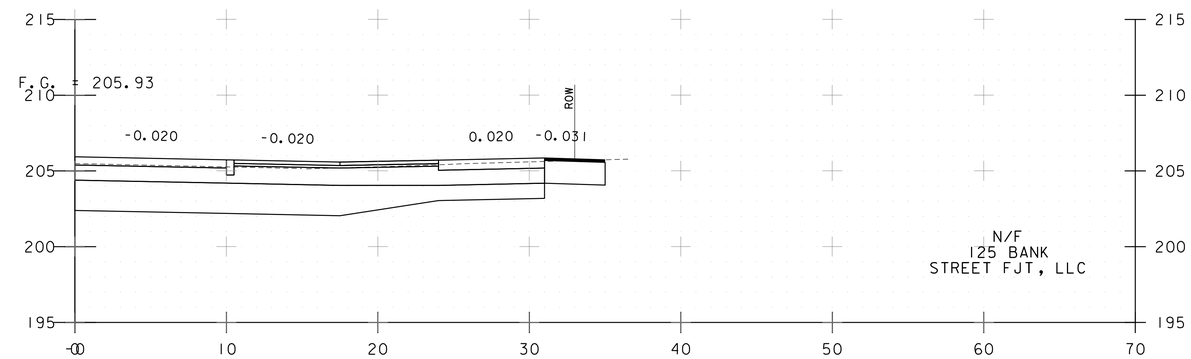

51+69

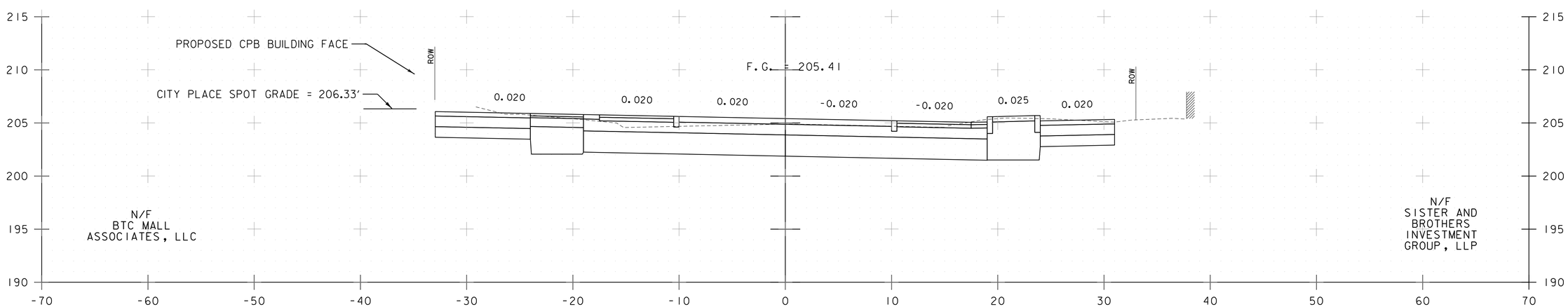

51+50

BANK STREET CROSS SECTIONS

PROJECT NAME: CITY OF BURLINGTON	
PROJECT NUMBER: 195311541	
FILE NAME: 11541xs.dgn	PLOT DATE: 6/29/2018
PROJECT LEADER: G. EDWARDS	DRAWN BY: G. MERKLE
DESIGNED BY: K. RICHARDSON	CHECKED BY: G. GOYETTE
CROSS SECTIONS 43	SHEET 70 OF 91

Stantec

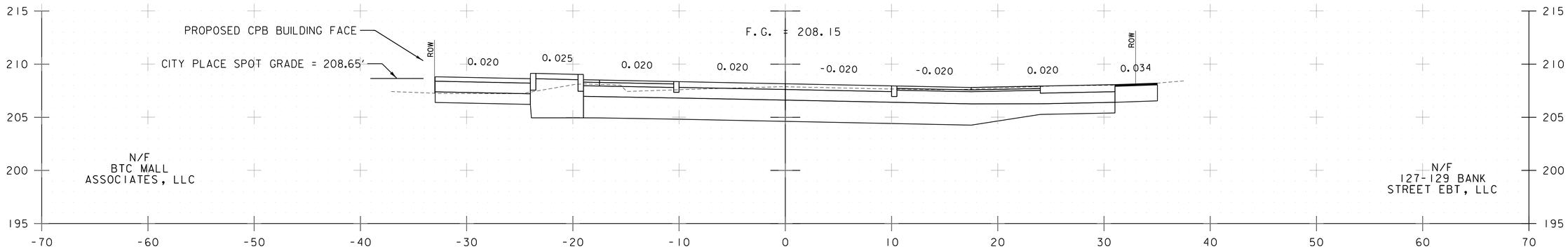

52+50

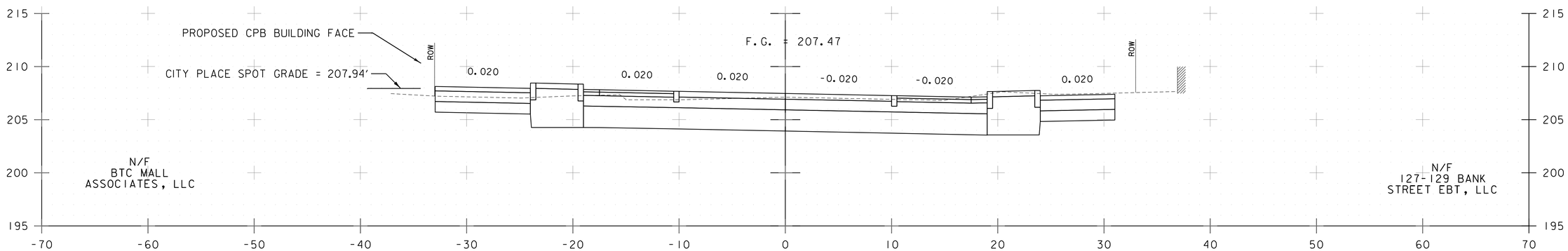

52+25

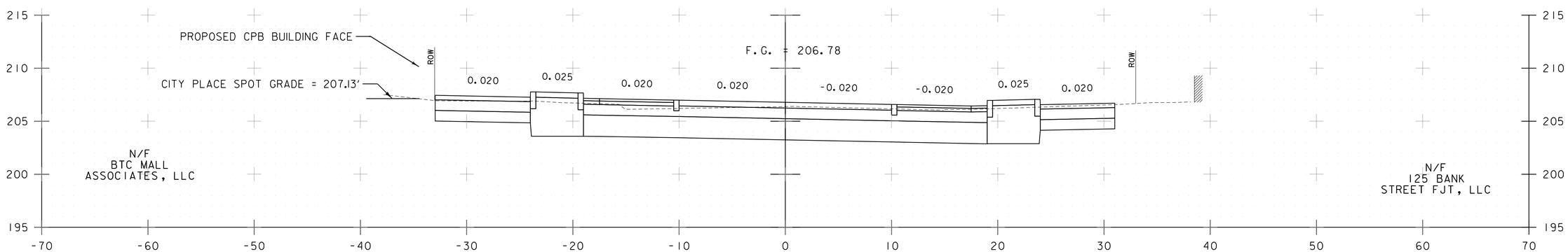

52+00

BANK STREET CROSS SECTIONS

PROJECT NAME: CITY OF BURLINGTON	
PROJECT NUMBER: 195311541	
FILE NAME: 1154lxs.dgn	PLOT DATE: 6/29/2018
PROJECT LEADER: G. EDWARDS	DRAWN BY: G. MERKLE
DESIGNED BY: K. RICHARDSON	CHECKED BY: G. GOYETTE
CROSS SECTIONS 44	SHEET 71 OF 91

Stantec

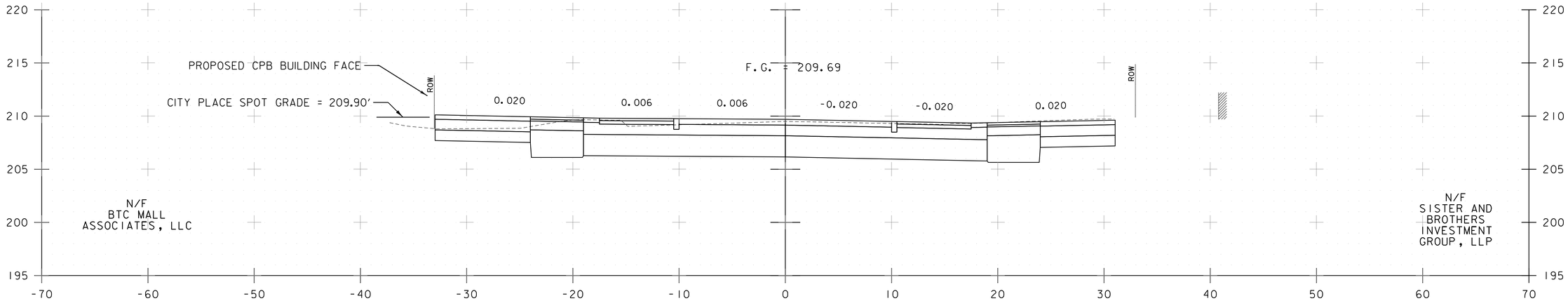

53+00

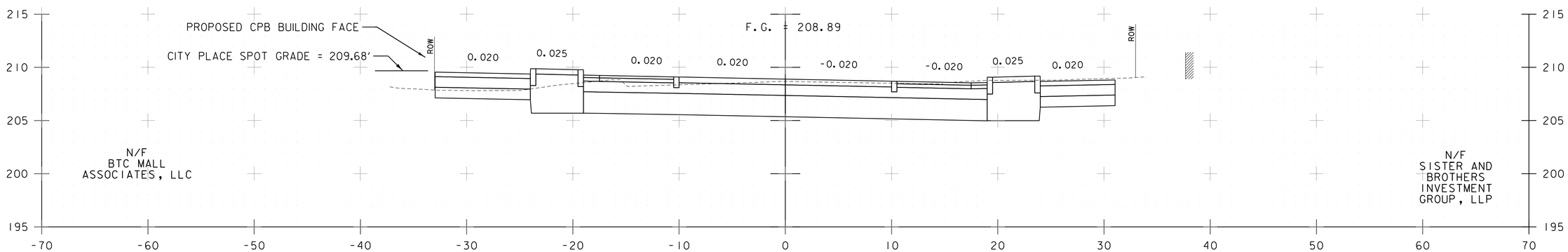

52+75

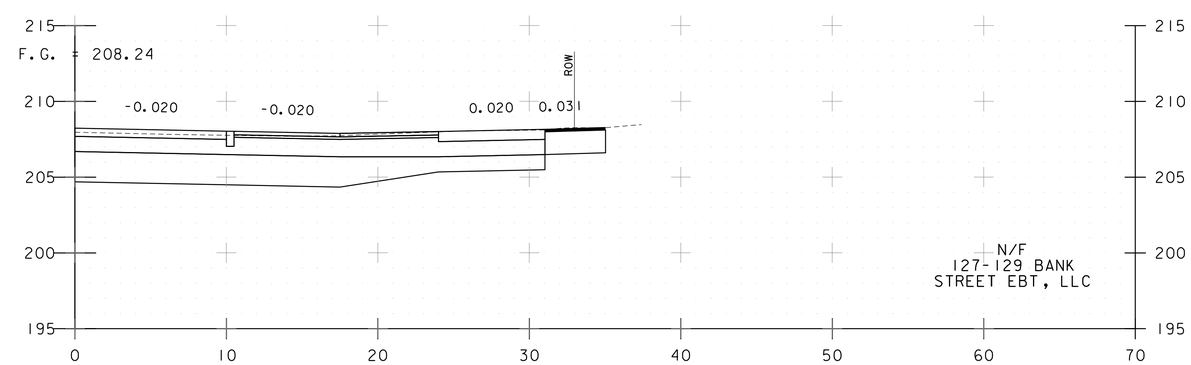

52+53

BANK STREET CROSS SECTIONS

PROJECT NAME: CITY OF BURLINGTON	
PROJECT NUMBER: 195311541	
FILE NAME: 11541xs.dgn	PLOT DATE: 6/29/2018
PROJECT LEADER: G. EDWARDS	DRAWN BY: G. MERKLE
DESIGNED BY: K. RICHARDSON	CHECKED BY: G. GOYETTE
CROSS SECTIONS 45	SHEET 72 OF 91

Stantec

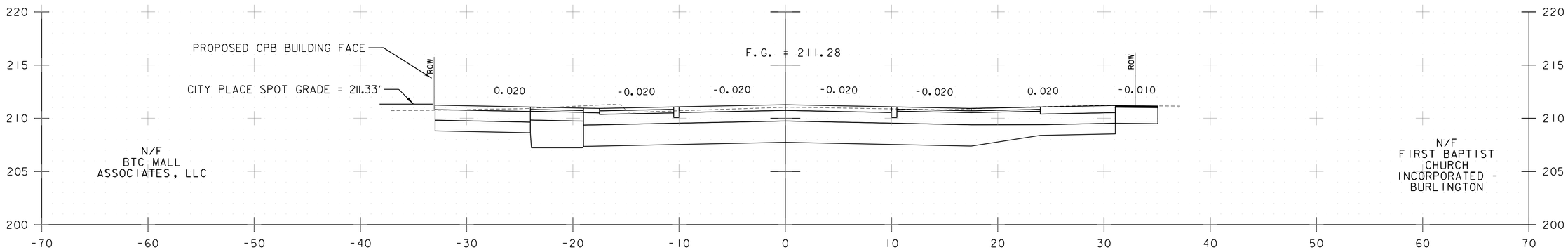

53+50

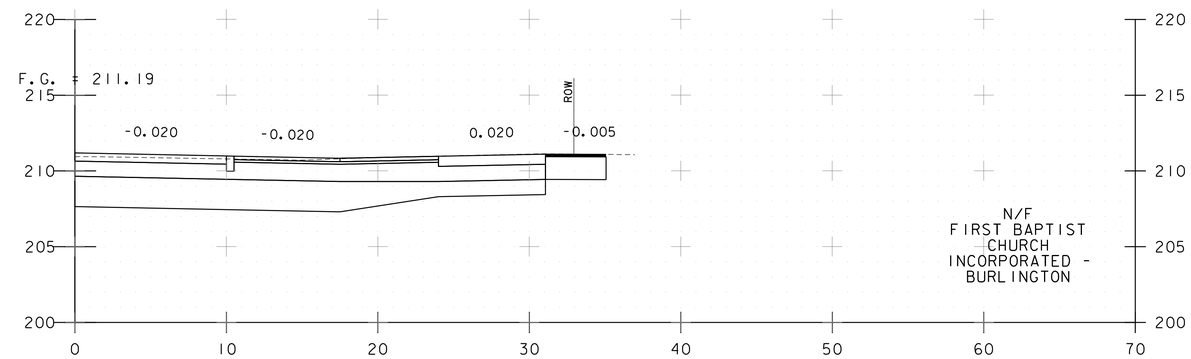

53+47

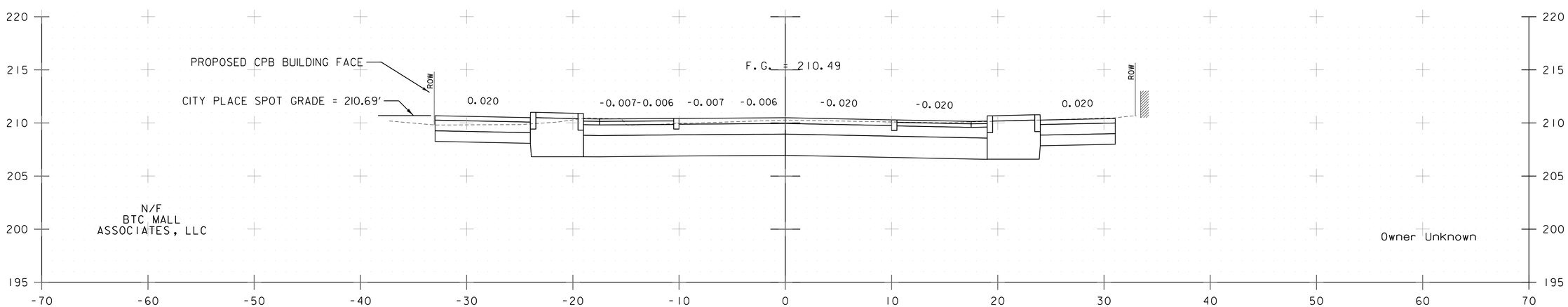

53+25

BANK STREET CROSS SECTIONS

PROJECT NAME: CITY OF BURLINGTON	
PROJECT NUMBER: 195311541	
FILE NAME: 11541xs.dgn	PLOT DATE: 6/29/2018
PROJECT LEADER: G. EDWARDS	DRAWN BY: G. MERKLE
DESIGNED BY: K. RICHARDSON	CHECKED BY: G. GOYETTE
CROSS SECTIONS 46	SHEET 73 OF 91

Stantec

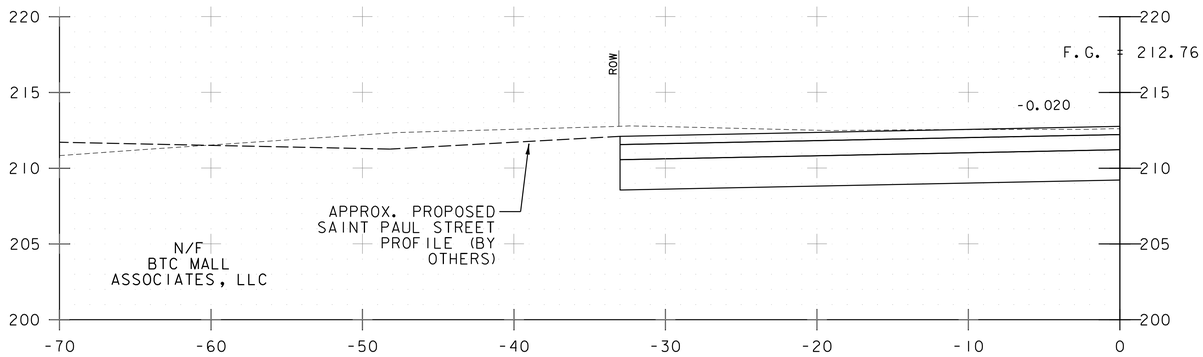

54+06

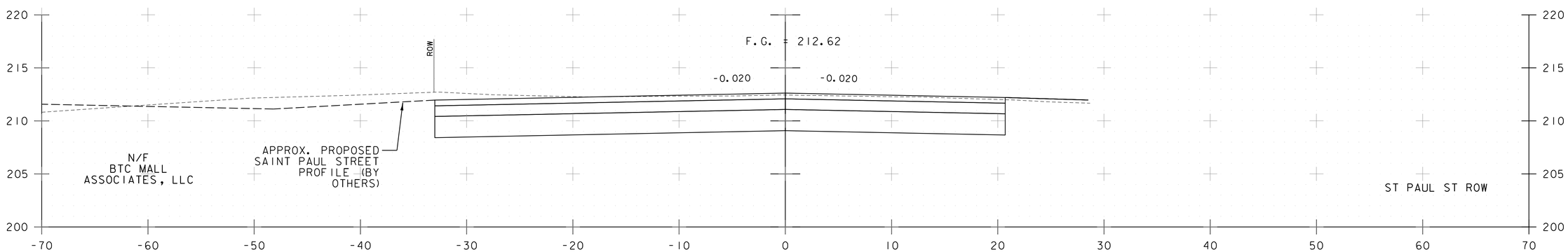

54+00

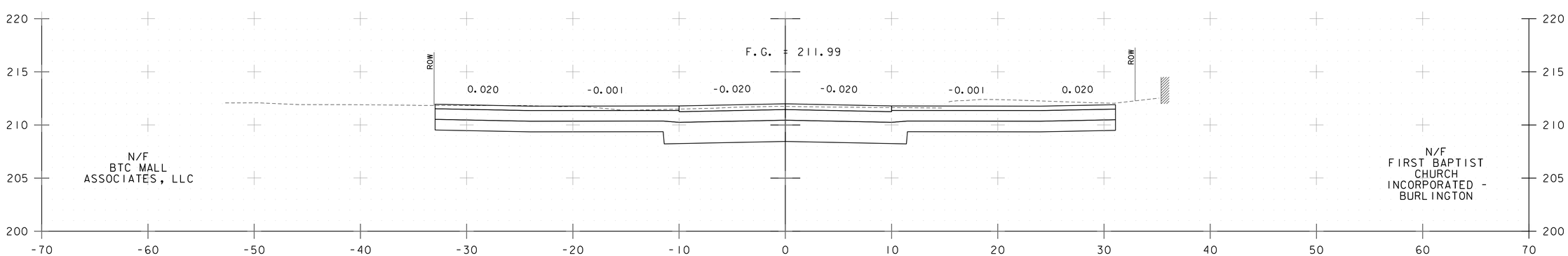

53+75

BANK STREET CROSS SECTIONS

PROJECT NAME: CITY OF BURLINGTON	
PROJECT NUMBER: 195311541	
FILE NAME: 11541xs.dgn	PLOT DATE: 6/29/2018
PROJECT LEADER: G. EDWARDS	DRAWN BY: G. MERKLE
DESIGNED BY: K. RICHARDSON	CHECKED BY: G. GOYETTE
CROSS SECTIONS 47	SHEET 74 OF 91

Stantec

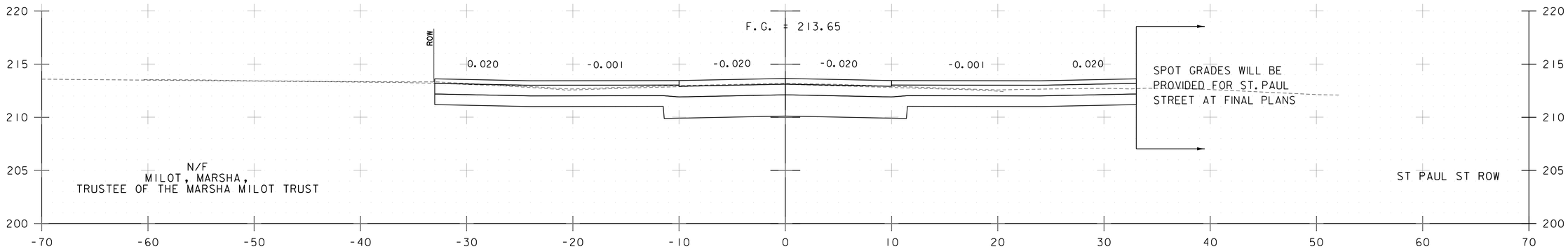

54+50

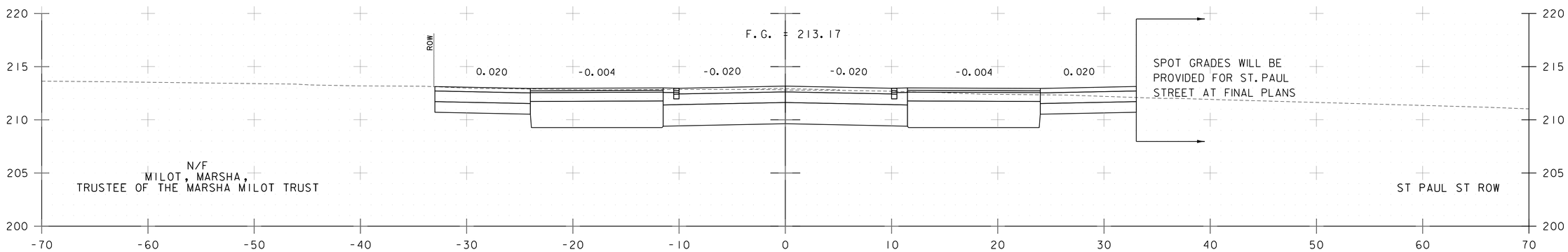

54+25

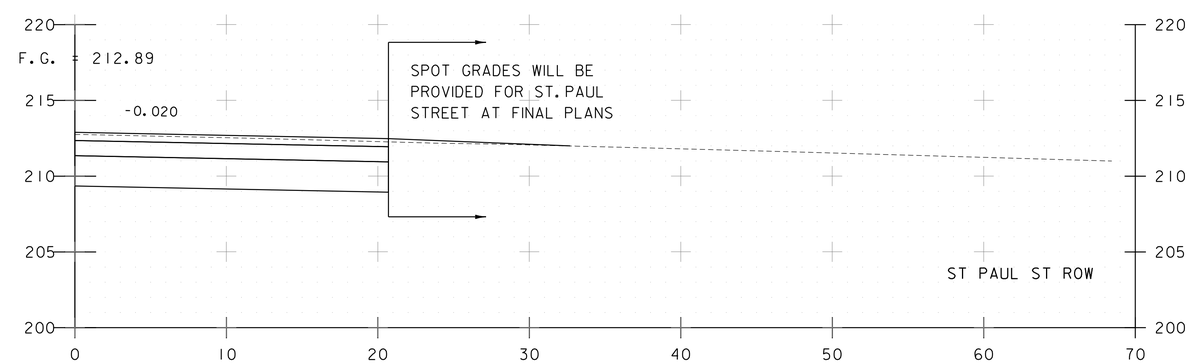

54+12

BANK STREET CROSS SECTIONS

PROJECT NAME: CITY OF BURLINGTON	
PROJECT NUMBER: 195311541	
FILE NAME: 11541xs.dgn	PLOT DATE: 6/29/2018
PROJECT LEADER: G. EDWARDS	DRAWN BY: G. MERKLE
DESIGNED BY: K. RICHARDSON	CHECKED BY: G. GOYETTE
CROSS SECTIONS 48	SHEET 75 OF 91

Stantec

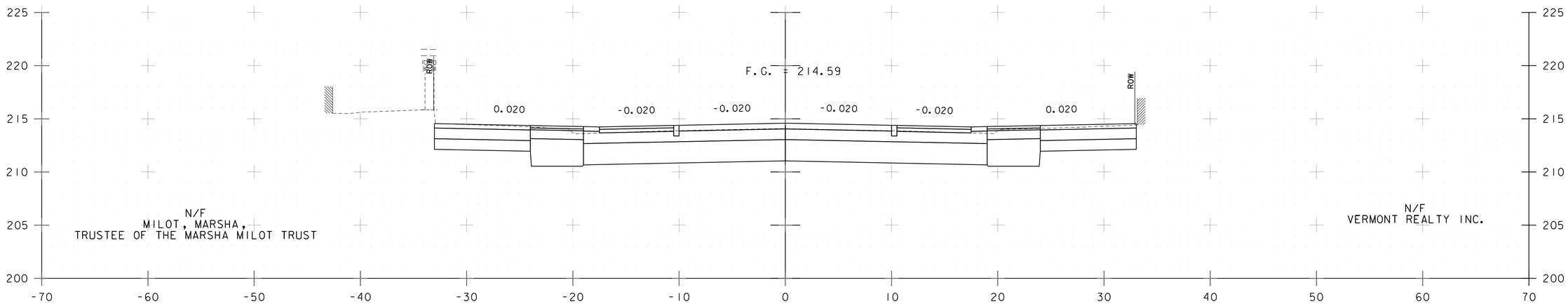

55+00

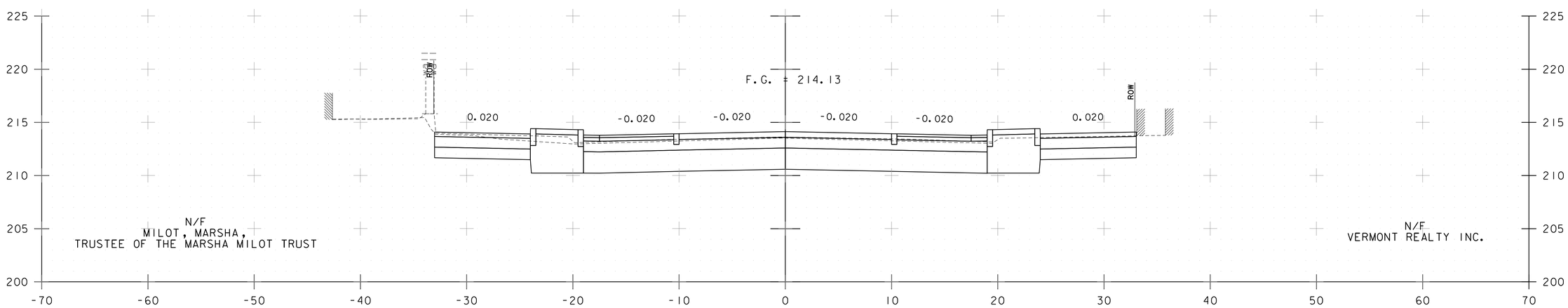

54+75

BANK STREET CROSS SECTIONS

PROJECT NAME: CITY OF BURLINGTON	
PROJECT NUMBER: 195311541	
FILE NAME: 11541xs.dgn	PLOT DATE: 6/29/2018
PROJECT LEADER: G. EDWARDS	DRAWN BY: G. MERKLE
DESIGNED BY: K. RICHARDSON	CHECKED BY: G. GOYETTE
CROSS SECTIONS 49	SHEET 76 OF 91

Stantec

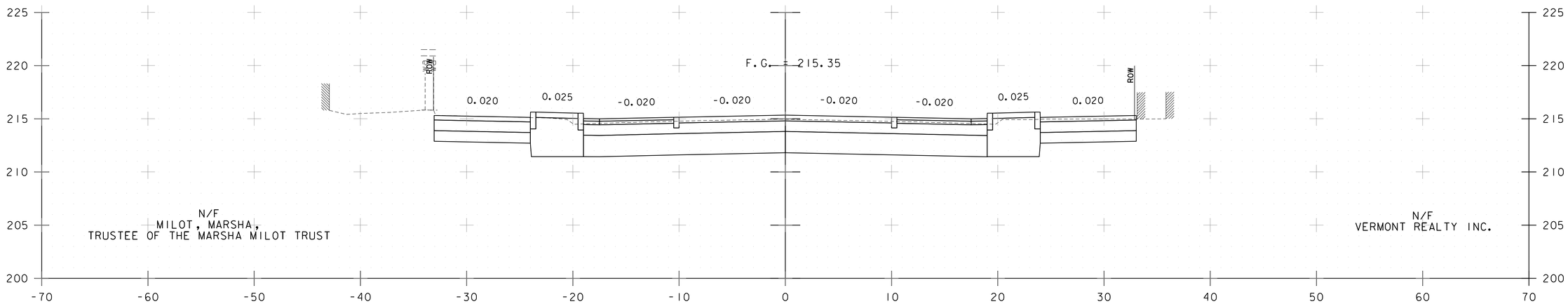

55+50

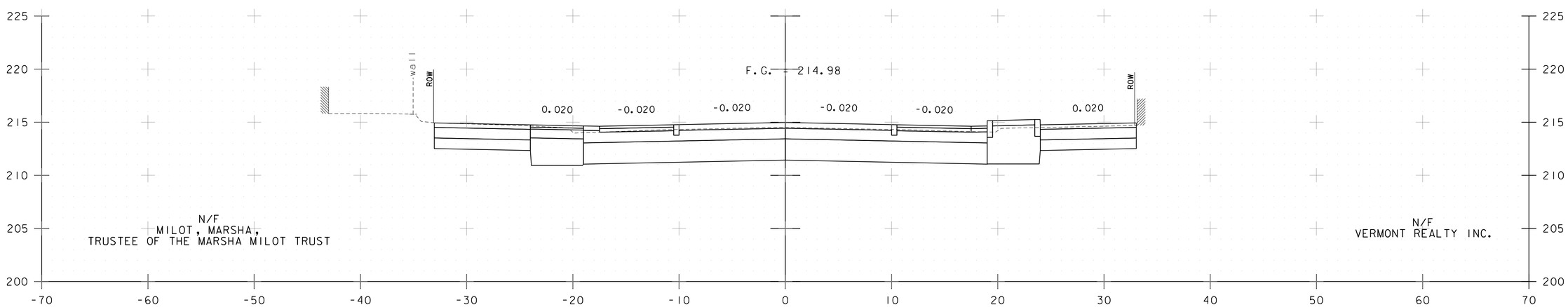

55+25

BANK STREET CROSS SECTIONS

PROJECT NAME: CITY OF BURLINGTON	
PROJECT NUMBER: 195311541	
FILE NAME: 11541xs.dgn	PLOT DATE: 6/29/2018
PROJECT LEADER: G. EDWARDS	DRAWN BY: G. MERKLE
DESIGNED BY: K. RICHARDSON	CHECKED BY: G. GOYETTE
CROSS SECTIONS 50	SHEET 77 OF 91

Stantec

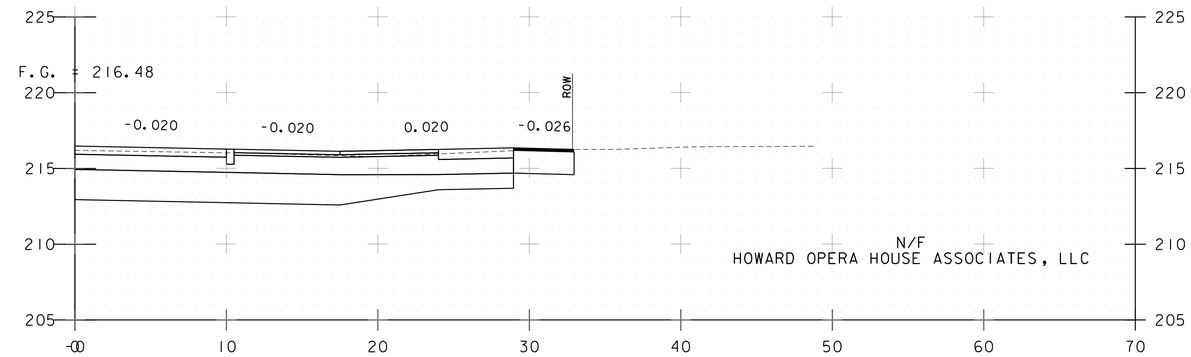

56+22

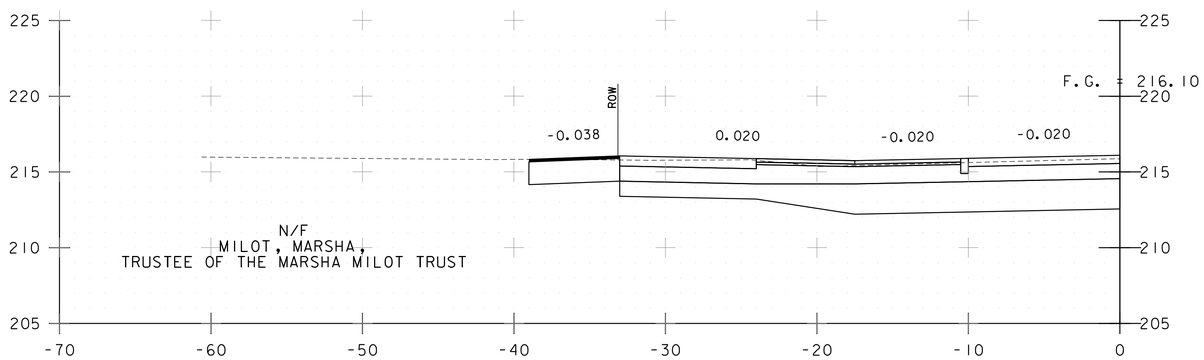

56+00

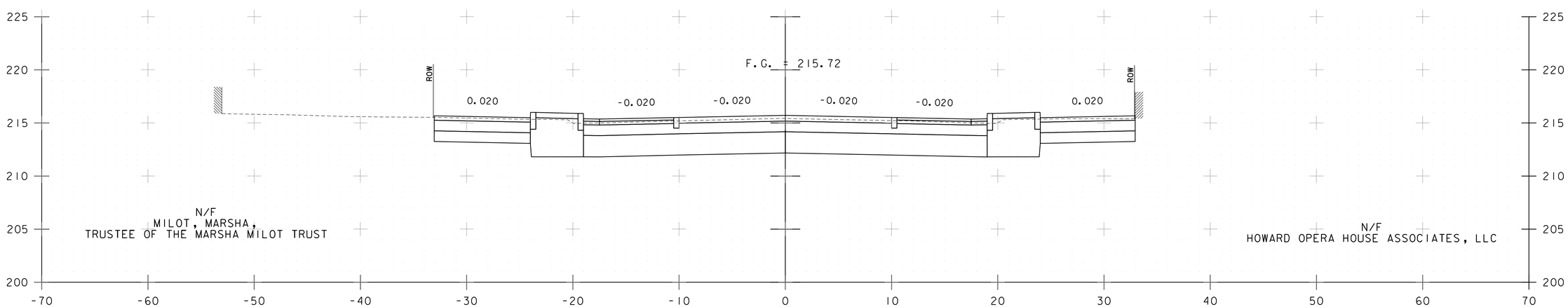

55+75

BANK STREET CROSS SECTIONS

PROJECT NAME: CITY OF BURLINGTON	
PROJECT NUMBER: 195311541	
FILE NAME: 11541xs.dgn	PLOT DATE: 6/29/2018
PROJECT LEADER: G. EDWARDS	DRAWN BY: G. MERKLE
DESIGNED BY: K. RICHARDSON	CHECKED BY: G. GOYETTE
CROSS SECTIONS 51	SHEET 78 OF 91

Stantec

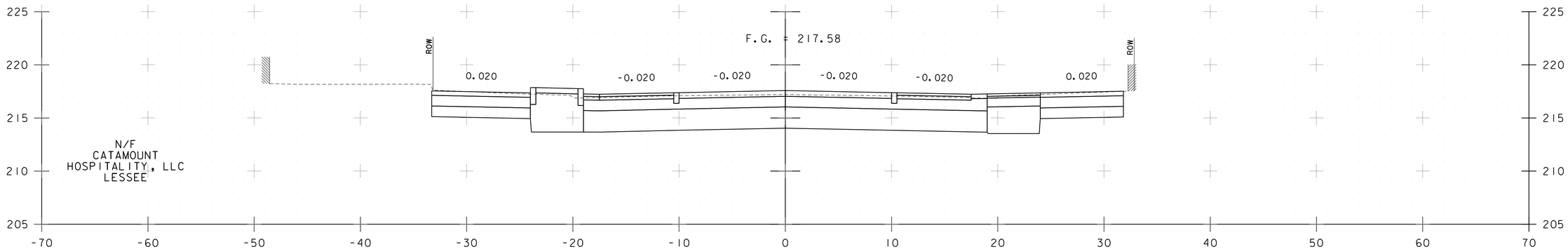

56+75

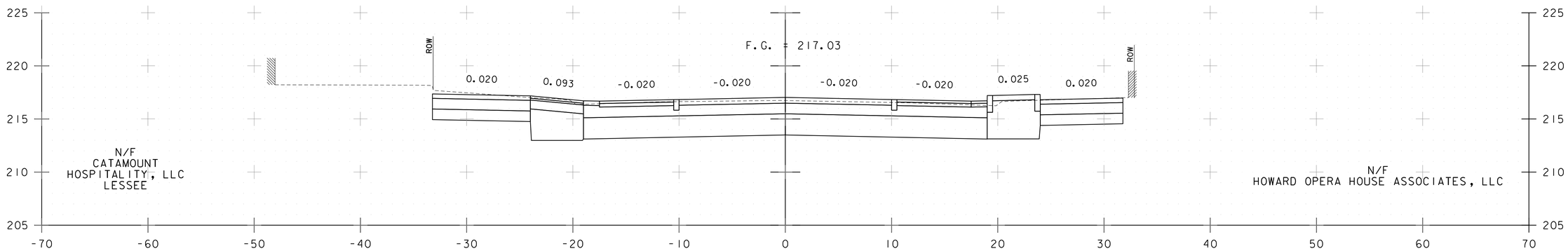

56+50

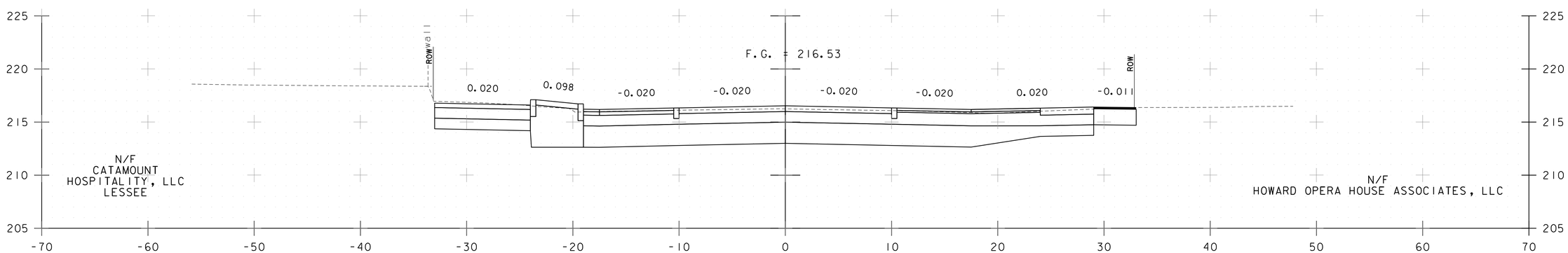

56+25

BANK STREET CROSS SECTIONS

PROJECT NAME: CITY OF BURLINGTON
PROJECT NUMBER: 195311541

Stantec

FILE NAME: 11541xs.dgn	PLOT DATE: 6/29/2018
PROJECT LEADER: G. EDWARDS	DRAWN BY: G. MERKLE
DESIGNED BY: K. RICHARDSON	CHECKED BY: G. GOYETTE
CROSS SECTIONS 52	SHEET 79 OF 91

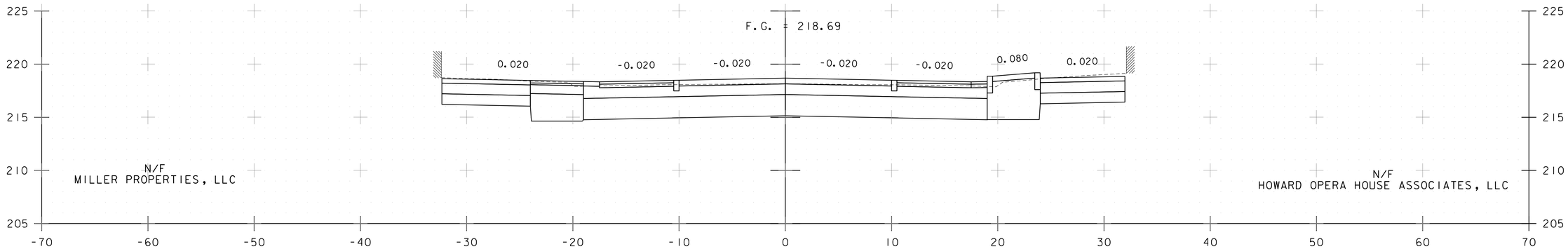

57+25

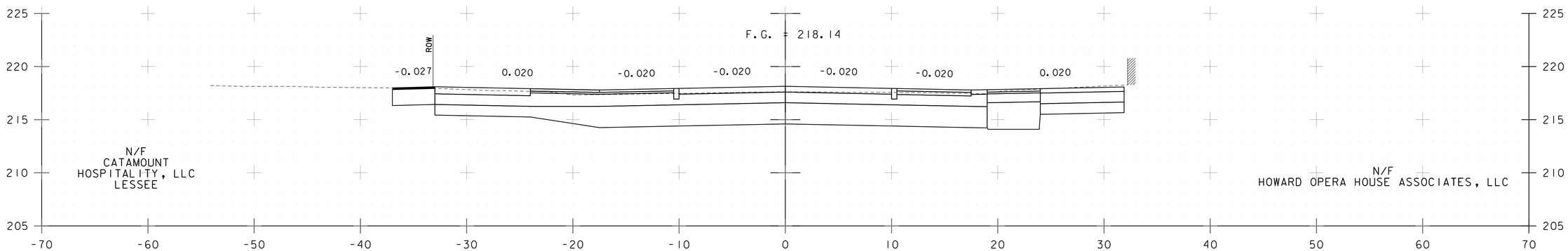

57+00

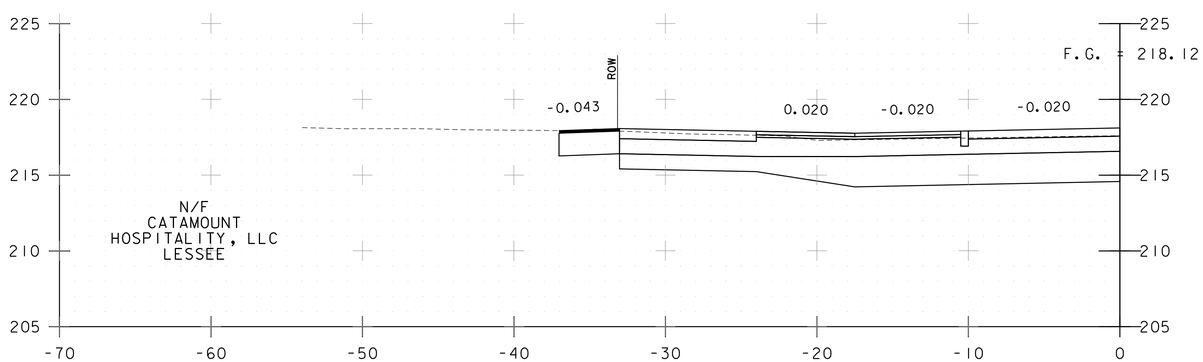

56+99

BANK STREET CROSS SECTIONS

PROJECT NAME: CITY OF BURLINGTON
PROJECT NUMBER: 195311541

Stantec

FILE NAME: 11541xs.dgn
PROJECT LEADER: G. EDWARDS
DESIGNED BY: K. RICHARDSON
CROSS SECTIONS 53

PLOT DATE: 6/29/2018
DRAWN BY: G. MERKLE
CHECKED BY: G. GOYETTE
SHEET 80 OF 91

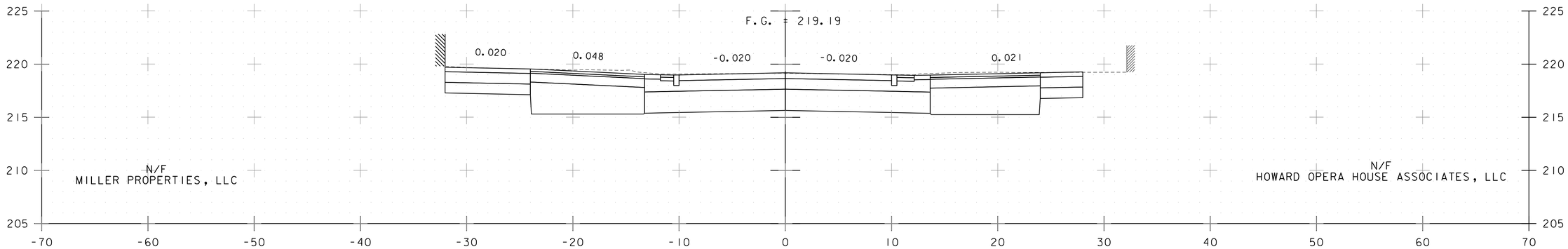

57+82

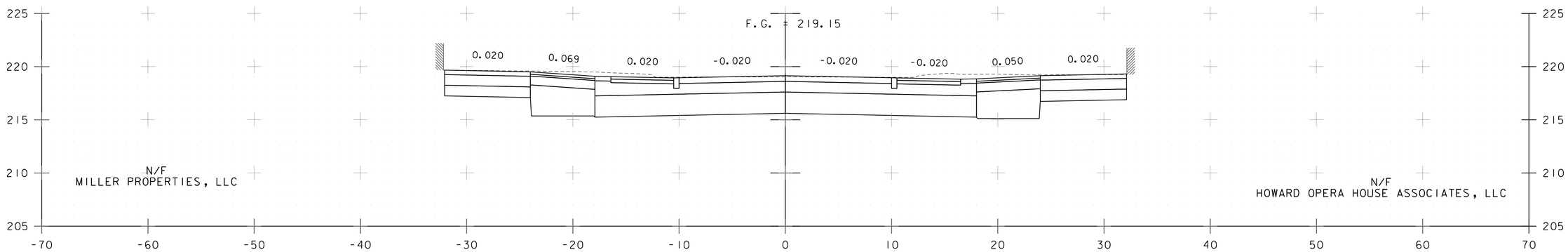

57+75

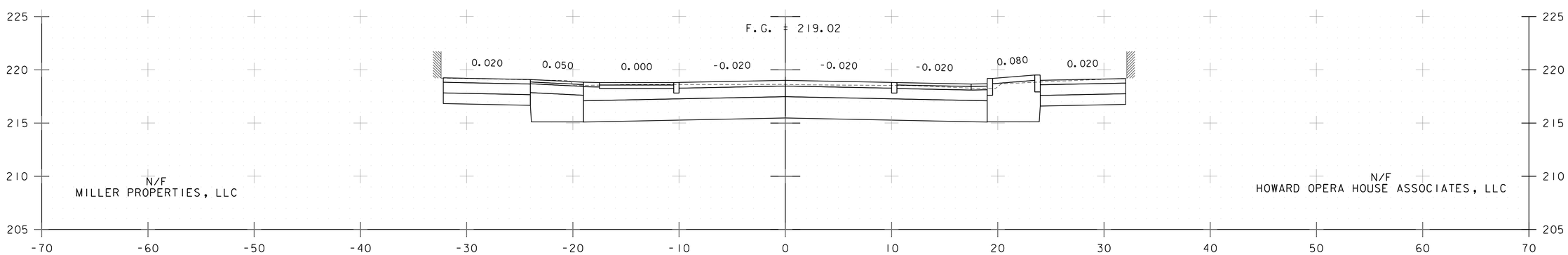

57+50

BANK STREET CROSS SECTIONS

PROJECT NAME: CITY OF BURLINGTON	
PROJECT NUMBER: 195311541	
FILE NAME: 11541xs.dgn	PLOT DATE: 6/29/2018
PROJECT LEADER: G. EDWARDS	DRAWN BY: G. MERKLE
DESIGNED BY: K. RICHARDSON	CHECKED BY: G. GOYETTE
CROSS SECTIONS 54	SHEET 81 OF 91

Stantec

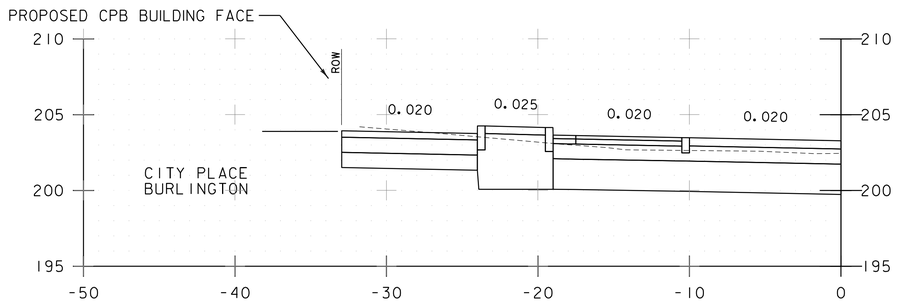

50+72
CITY PLACE
BURLINGTON

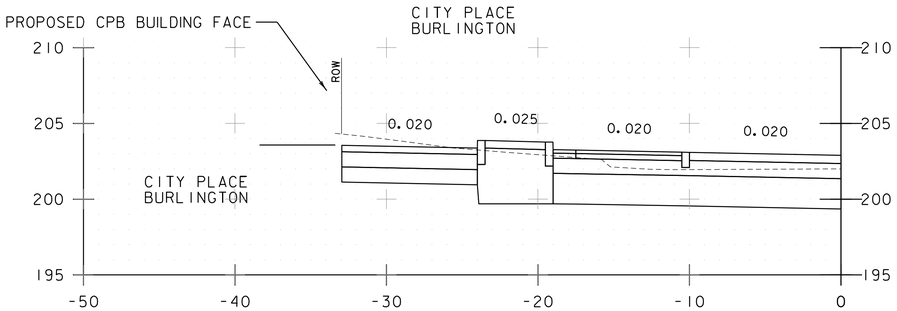

50+58
CITY PLACE
BURLINGTON

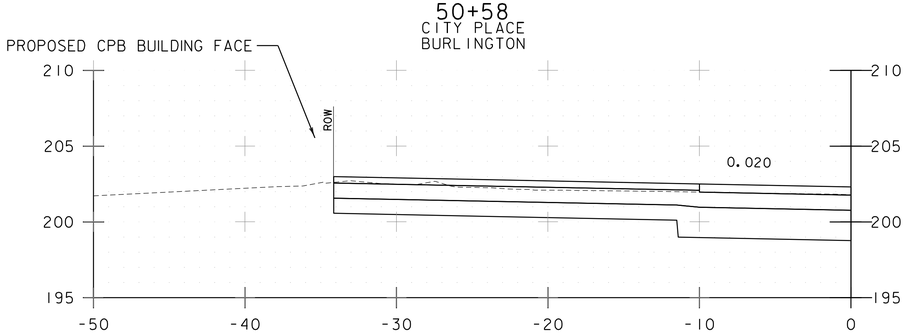

50+37
CITY PLACE
BURLINGTON

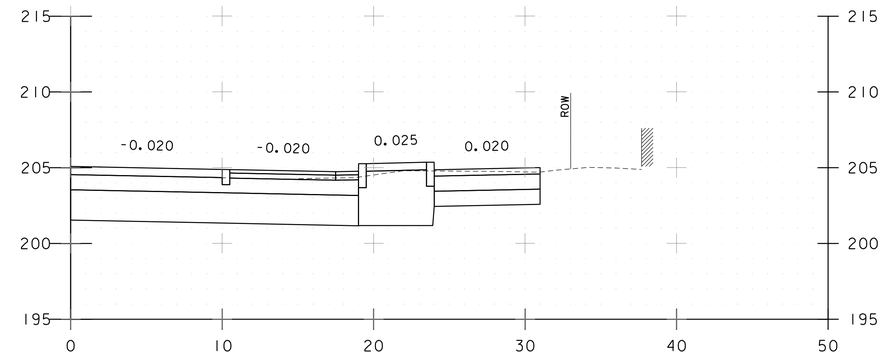

51+38
117 BANK STREET

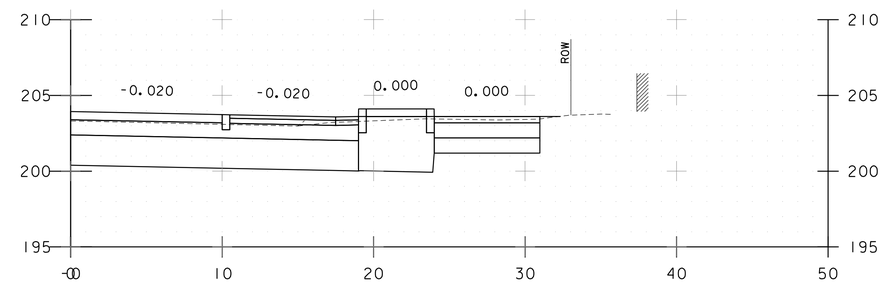

50+96
109 BANK STREET

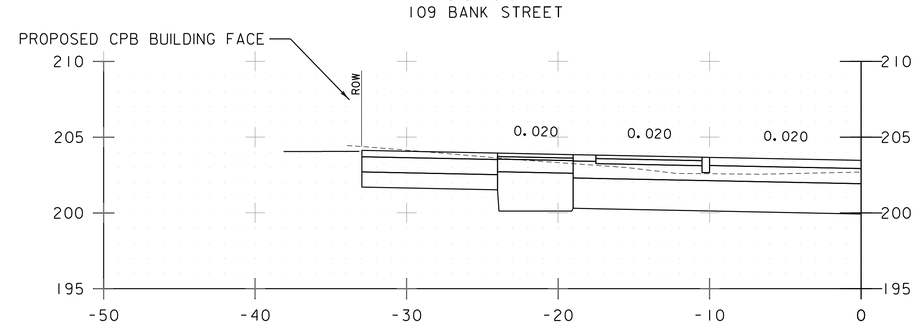

50+79
CITY PLACE
BURLINGTON

BANK STREET SILL SECTIONS

PROJECT NAME: CITY OF BURLINGTON	
PROJECT NUMBER: 195311541	
FILE NAME: 11541xs.dgn	PLOT DATE: 6/29/2018
PROJECT LEADER: G. EDWARDS	DRAWN BY: G. MERKLE
DESIGNED BY: K. RICHARDSON	CHECKED BY: G. GOYETTE
CROSS SECTIONS 55	SHEET 82 OF 91

Stantec

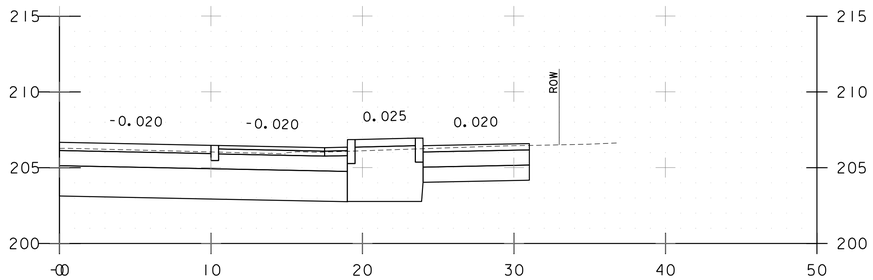

51+96
125 BANK STREET

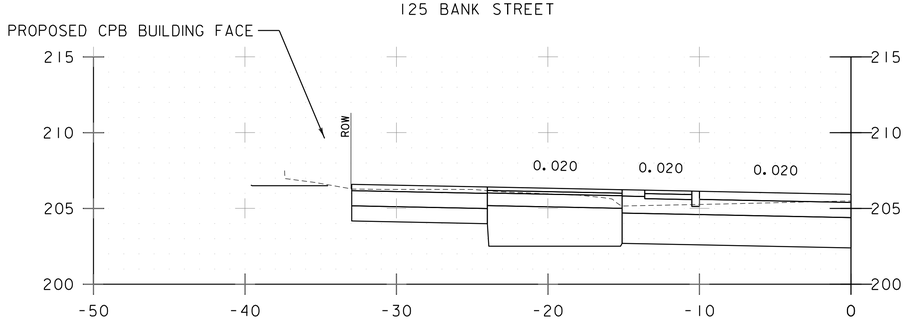

51+69
CITY PLACE
BURLINGTON

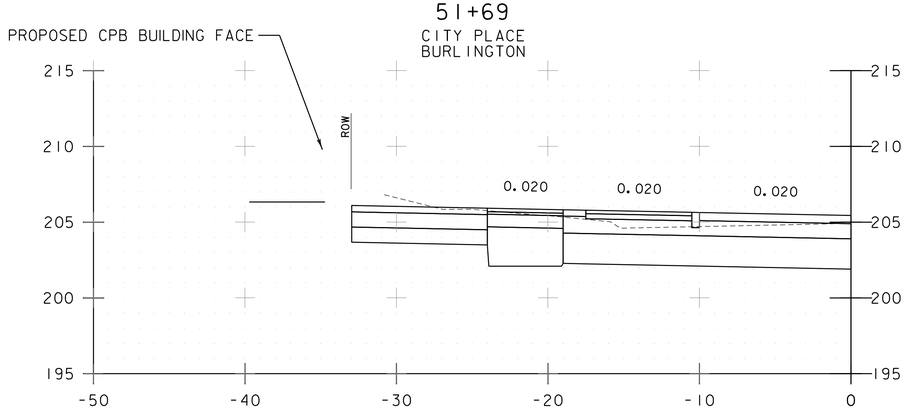

51+51
CITY PLACE
BURLINGTON

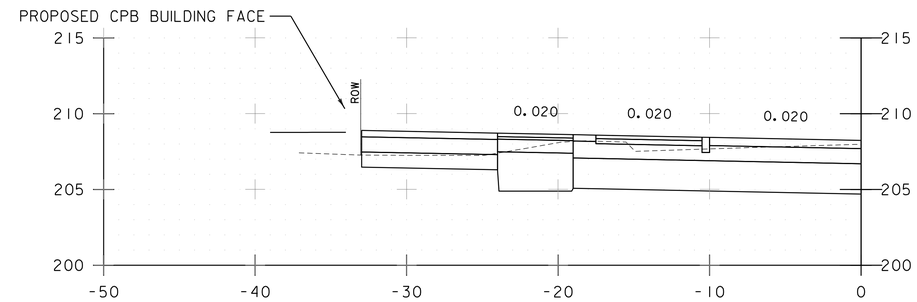

52+53
CITY PLACE
BURLINGTON

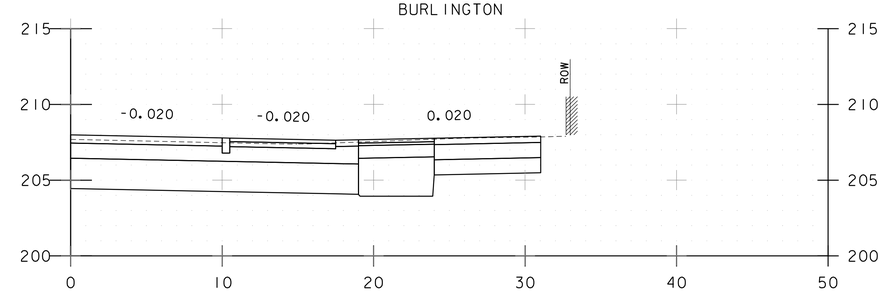

52+44
127 BANK STREET
JUBILANCE SALON

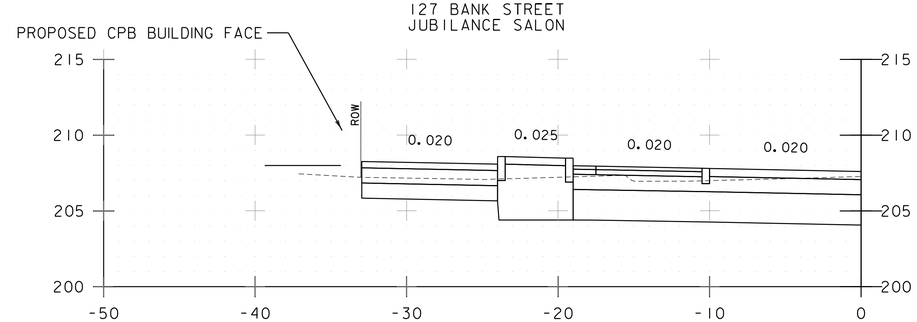

52+30
CITY PLACE
BURLINGTON

Stantec

BANK STREET SILL SECTIONS

PROJECT NAME: CITY OF BURLINGTON	
PROJECT NUMBER: 195311541	
FILE NAME: 11541xs.dgn	PLOT DATE: 6/29/2018
PROJECT LEADER: G. EDWARDS	DRAWN BY: G. MERKLE
DESIGNED BY: K. RICHARDSON	CHECKED BY: G. GOYETTE
CROSS SECTIONS 56	SHEET 83 OF 91

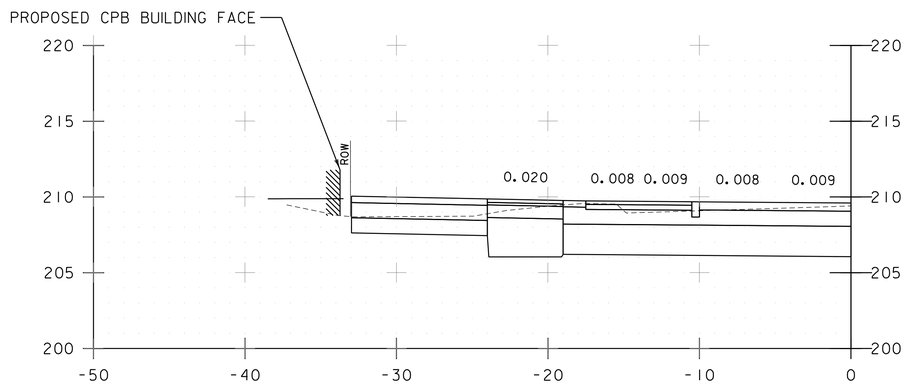

52+97
CITY PLACE
BURLINGTON

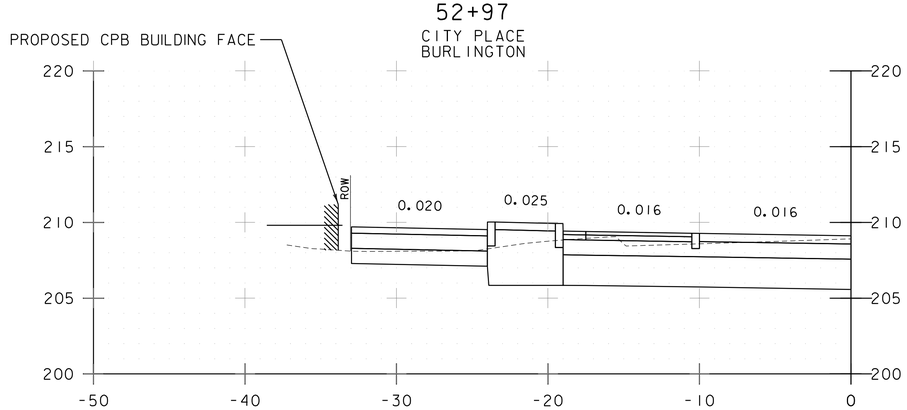

52+82
CITY PLACE
BURLINGTON

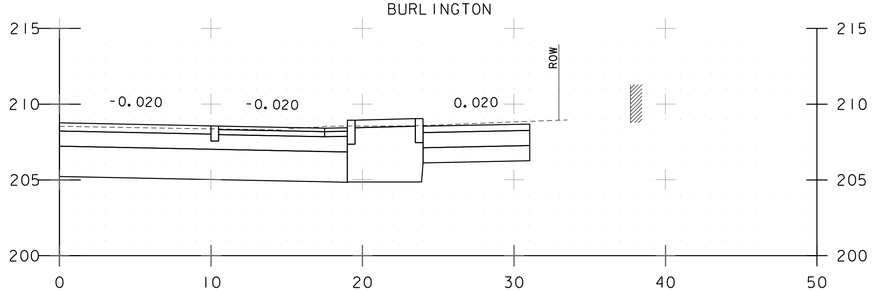

52+71
CITY PLACE
BURLINGTON

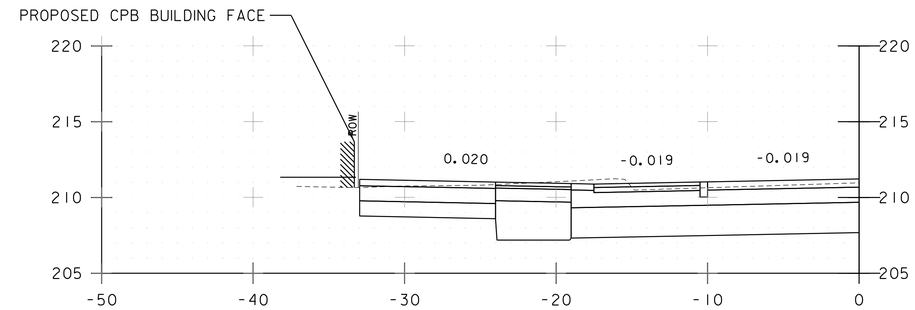

53+48
CITY PLACE
BURLINGTON

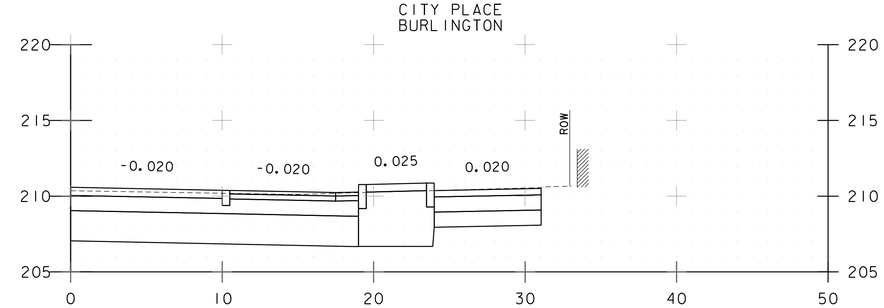

53+28
135 BANK STREET
A SINGLE PEBBLE

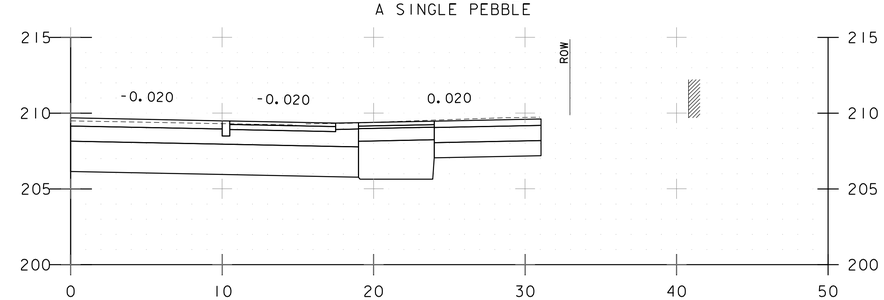

53+00
135 BANK STREET
A SINGLE PEBBLE

BANK STREET SILL SECTIONS

PROJECT NAME: CITY OF BURLINGTON	
PROJECT NUMBER: 195311541	
FILE NAME: 11541xs.dgn	PLOT DATE: 6/29/2018
PROJECT LEADER: G. EDWARDS	DRAWN BY: G. MERKLE
DESIGNED BY: K. RICHARDSON	CHECKED BY: G. GOYETTE
CROSS SECTIONS 57	SHEET 84 OF 91

Stantec

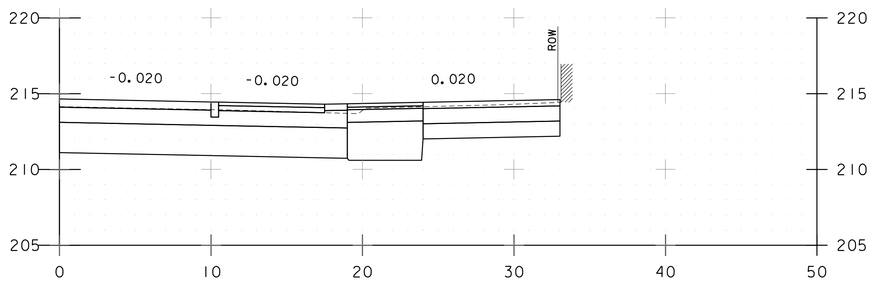

55+04
76 ST. PAUL STREET
KEYBANK

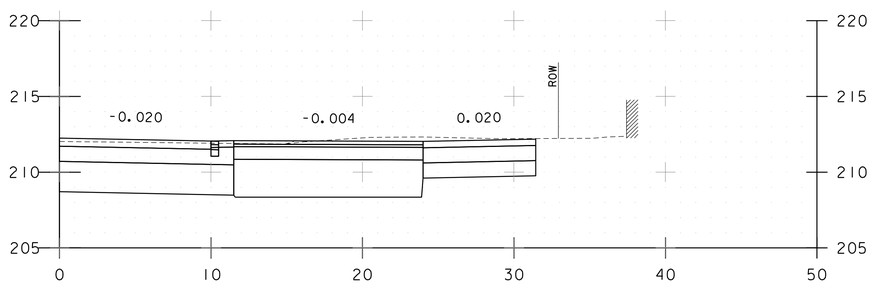

53+85
139 BANK STREET
FARMHOUSE GROUP EVENTS

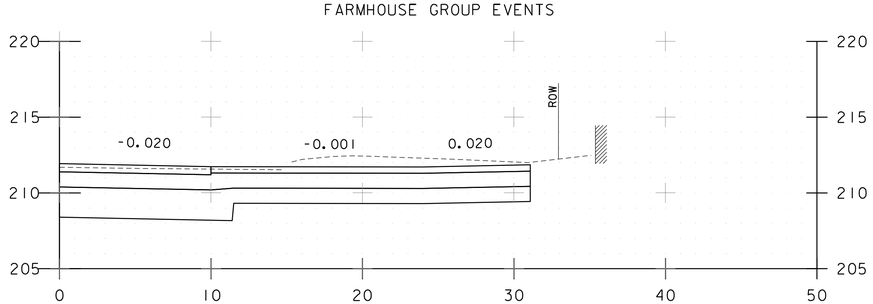

53+73
139 BANK STREET
FARMHOUSE GROUP EVENTS

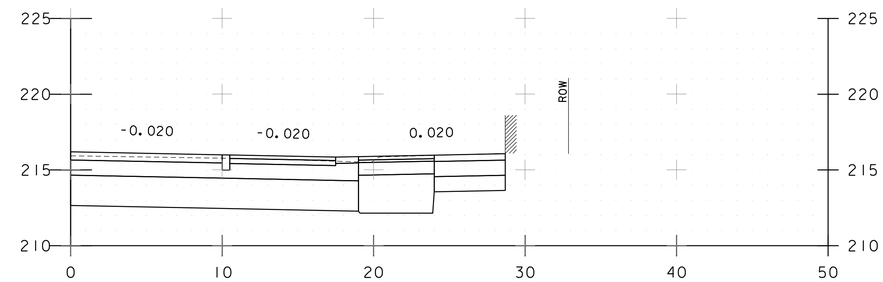

56+06
155 BANK STREET
HENRY'S DINER

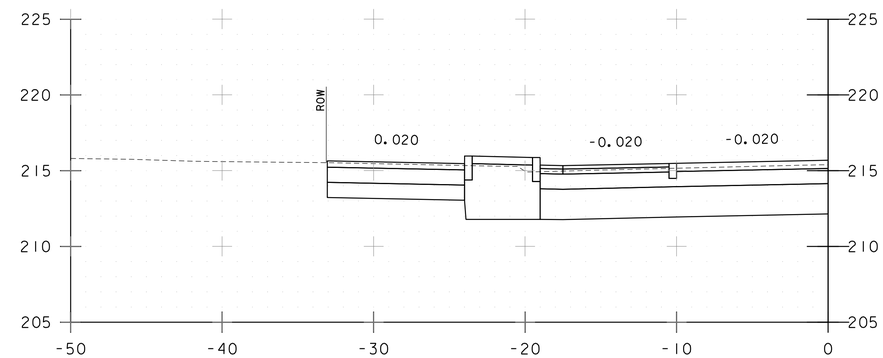

55+73
150 BANK STREET
NBT BANK

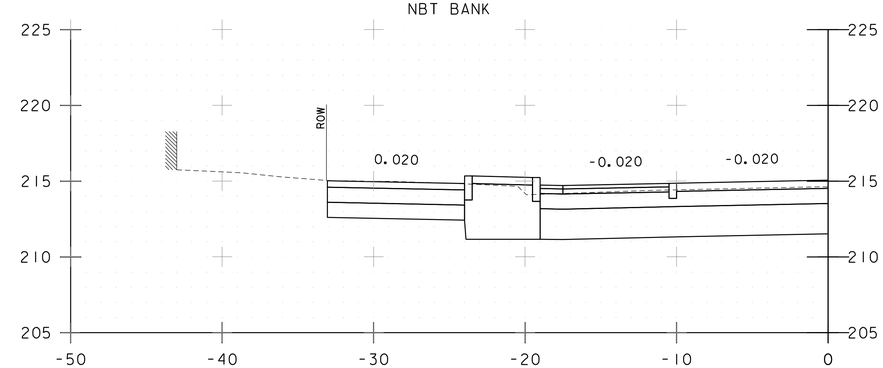

55+31
150 BANK STREET
NBT BANK

Stantec

BANK STREET SILL SECTIONS

PROJECT NAME: CITY OF BURLINGTON	
PROJECT NUMBER: 195311541	
FILE NAME: 11541xs.dgn	PLOT DATE: 6/29/2018
PROJECT LEADER: G. EDWARDS	DRAWN BY: G. MERKLE
DESIGNED BY: K. RICHARDSON	CHECKED BY: G. GOYETTE
CROSS SECTIONS 58	SHEET 85 OF 91

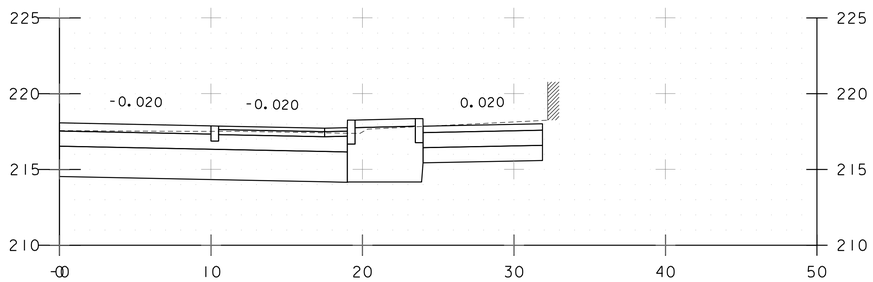

56+97
81-91 CHURCH STREET
HOWARD OPERA HOUSE

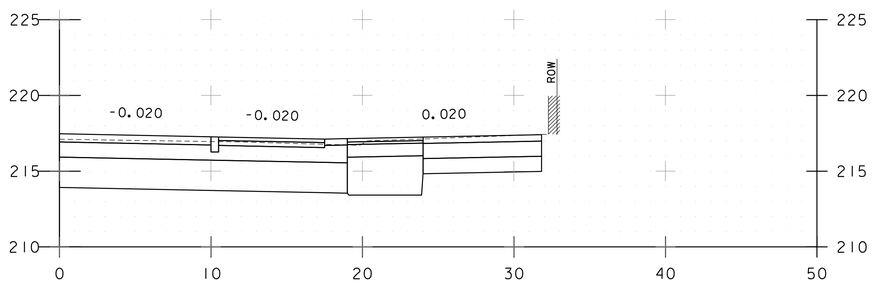

56+70
81-91 CHURCH STREET
SIMON PEARCE

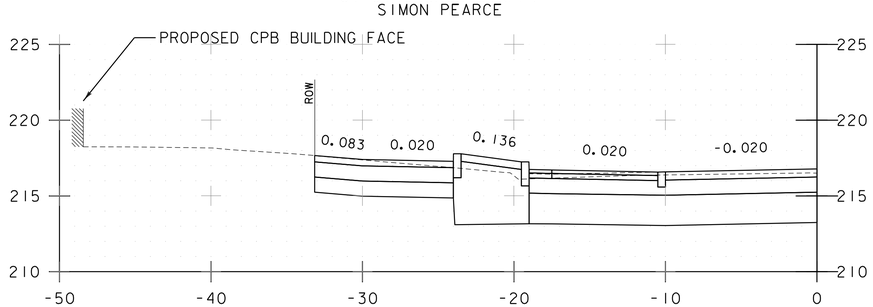

56+38
160 BANK STREET
THE FARMHOUSE TAP & GRILL

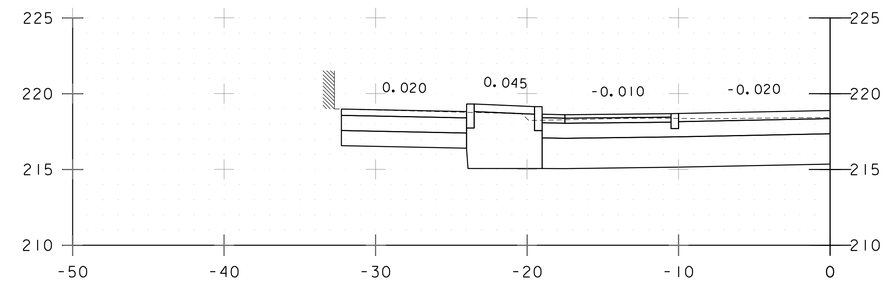

57+38
81-91 CHURCH STREET
BURLINGTON RECORDS

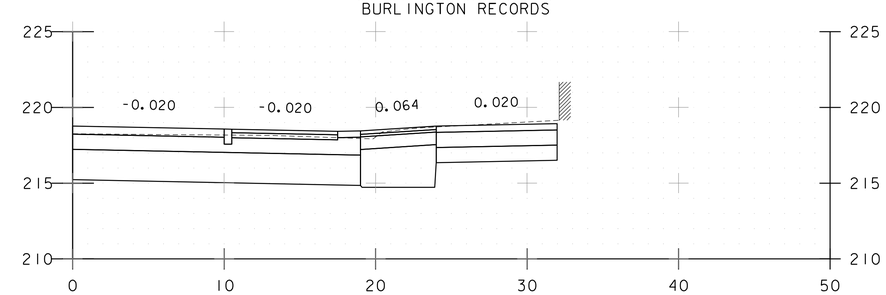

57+30
81-91 CHURCH STREET
ECCO CLOTHES FOR MEN & WOMEN

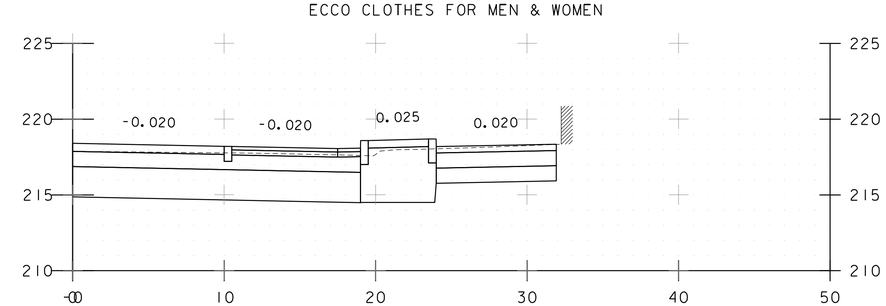

57+12
81-91 CHURCH STREET
ECCO CLOTHES FOR MEN & WOMEN

Stantec

BANK STREET SILL SECTIONS

PROJECT NAME: CITY OF BURLINGTON
PROJECT NUMBER: 195311541

FILE NAME: 11541xs.dgn
PROJECT LEADER: G. EDWARDS
DESIGNED BY: K. RICHARDSON
CROSS SECTIONS 59

PLOT DATE: 6/29/2018
DRAWN BY: G. MERKLE
CHECKED BY: G. GOYETTE
SHEET 86 OF 91

LAYOUT POINT	DESCRIPTION	NORTHING	EASTING	STATION	OFFSET
BI	XXXX	XXXXXX.XXXX	XXXXXXX.XXXX	XXX+XX.X	XX.X LT.
B2	XXXX	XXXXXX.XXXX	XXXXXXX.XXXX	XXX+XX.X	XX.X RT.
B3	XXXX	XXXXXX.XXXX	XXXXXXX.XXXX	XXX+XX.X	XX.X LT.
B4	XXXX	XXXXXX.XXXX	XXXXXXX.XXXX	XXX+XX.X	XX.X RT.
					LT.
					LT.
					RT.
					RT.

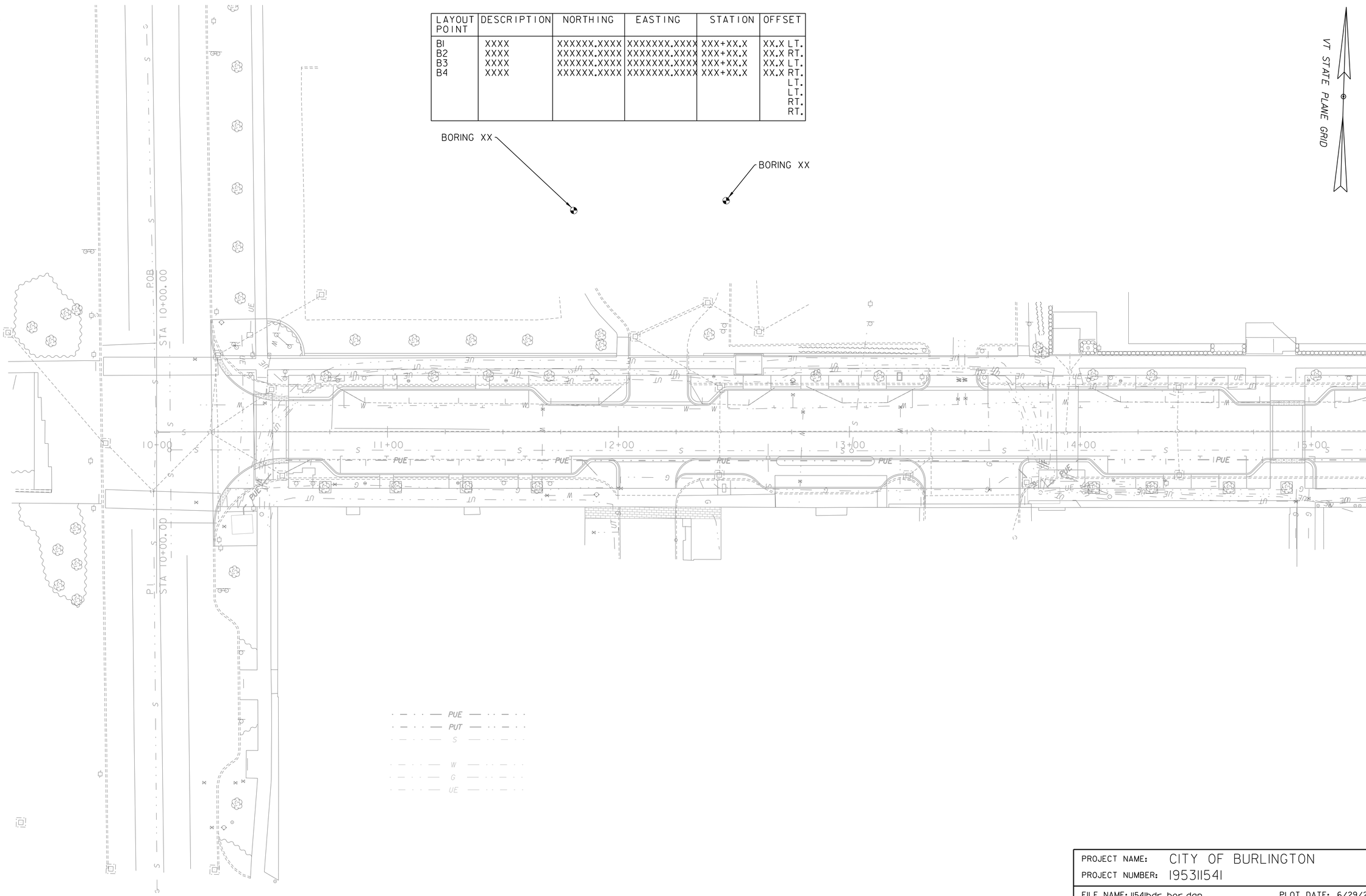

0 20 40
SCALE

Stantec

PROJECT NAME: CITY OF BURLINGTON
PROJECT NUMBER: 195311541

FILE NAME: 11541bdr_bor.dgn
PROJECT LEADER: G. EDWARDS
DESIGNED BY: K. RICHARDSON
BORING PLAN SHEET 1

PLOT DATE: 6/29/2018
DRAWN BY: J. BURKE
CHECKED BY: G. GOYETTE
SHEET 87 OF 91

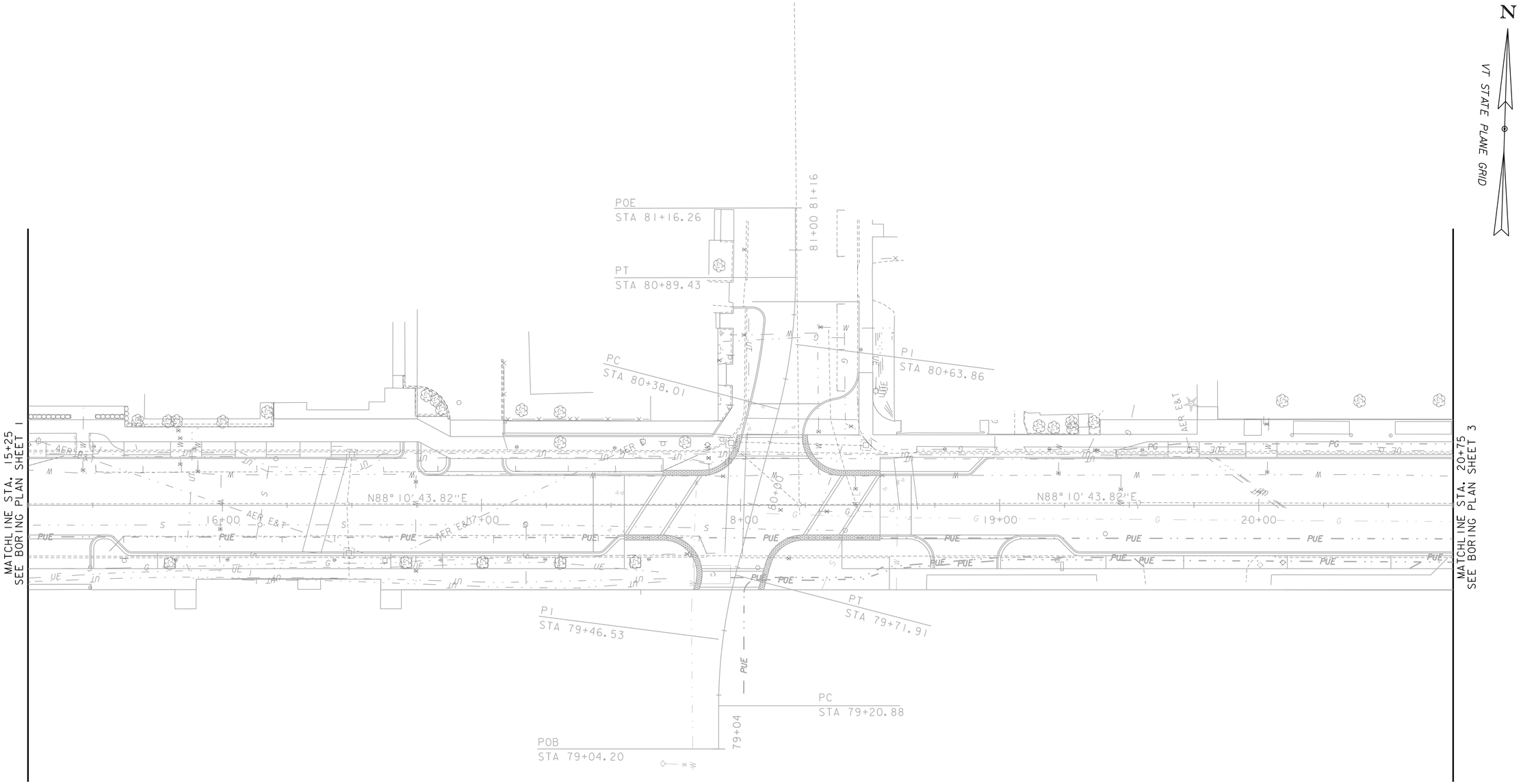

0 20 40
SCALE

Stantec

PROJECT NAME: CITY OF BURLINGTON	
PROJECT NUMBER: 195311541	
FILE NAME: 1154lbdr_bor.dgn	PLOT DATE: 6/29/2018
PROJECT LEADER: G. EDWARDS	DRAWN BY: J. BURKE
DESIGNED BY: K. RICHARDSON	CHECKED BY: G. GOYETTE
BORING PLAN SHEET 2	SHEET 88 OF 91

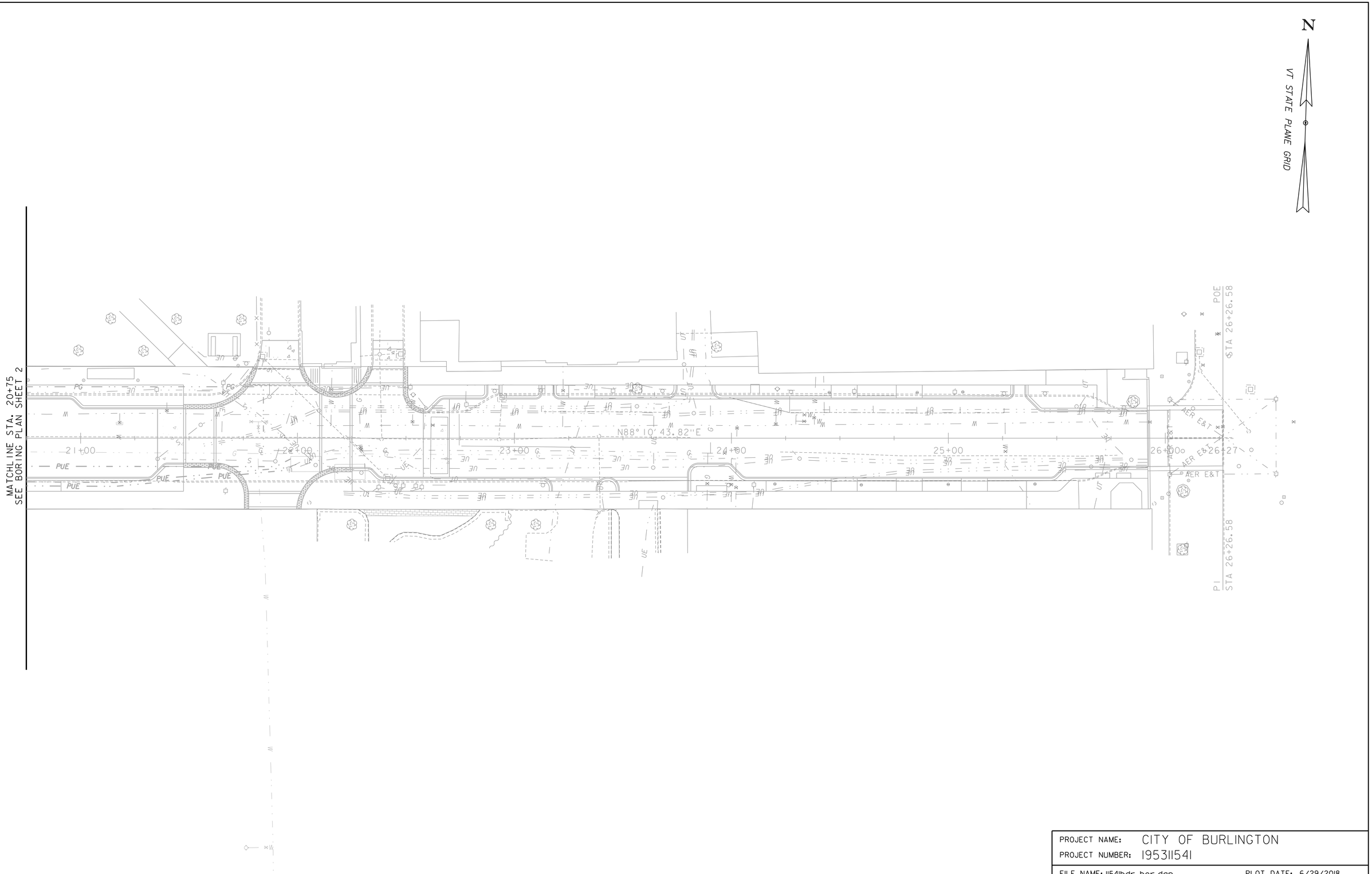

Stantec

PROJECT NAME: CITY OF BURLINGTON	
PROJECT NUMBER: 195311541	
FILE NAME: 11541bdr_bor.dgn	PLOT DATE: 6/29/2018
PROJECT LEADER: G. EDWARDS	DRAWN BY: J. BURKE
DESIGNED BY: K. RICHARDSON	CHECKED BY: G. GOYETTE
BORING PLAN SHEET 3	SHEET 89 OF 91

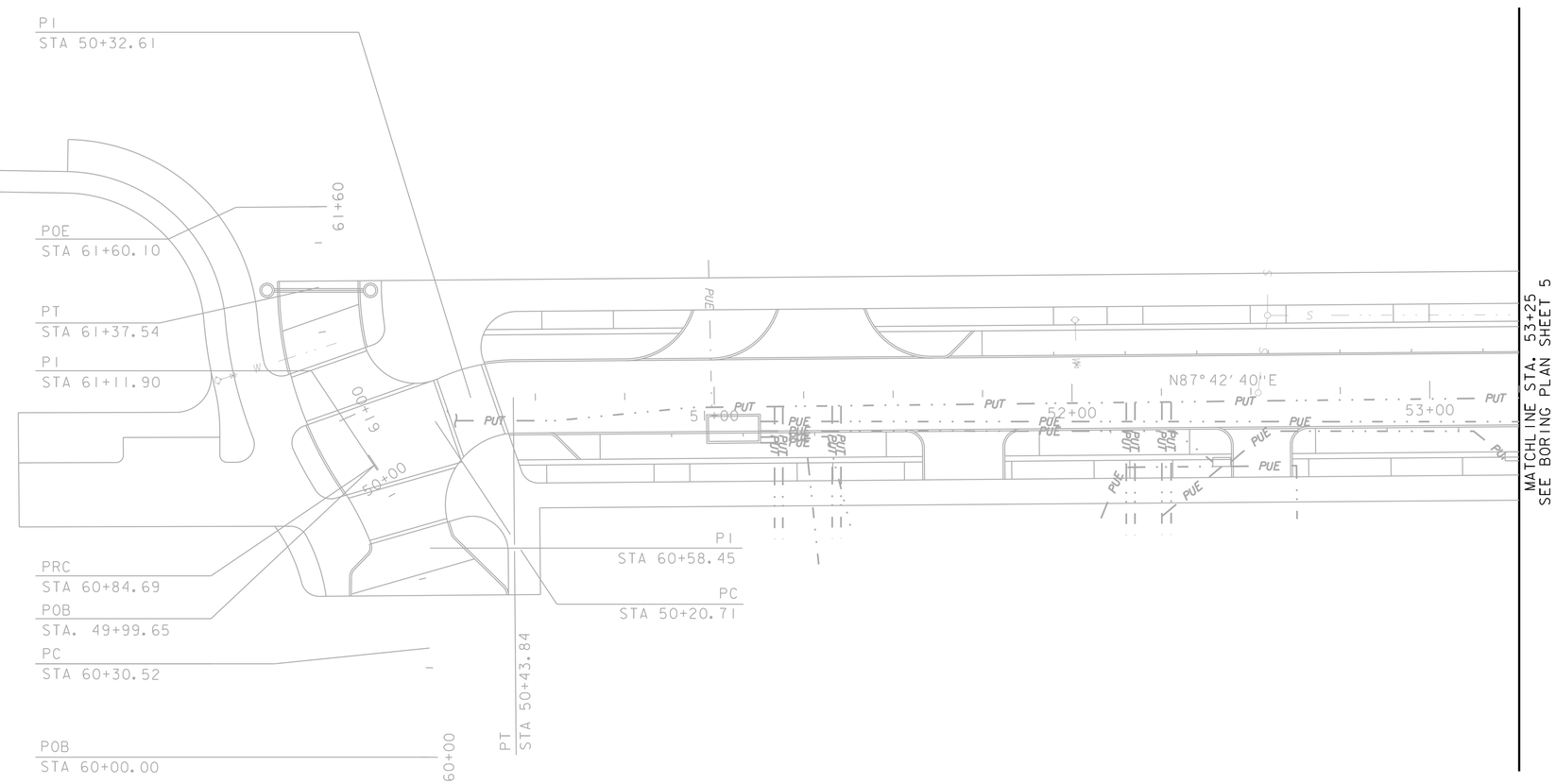

0 20 40
SCALE

Stantec

PROJECT NAME: CITY OF BURLINGTON	
PROJECT NUMBER: 195311541	
FILE NAME: 1154lbdr_bor.dgn	PLOT DATE: 6/29/2018
PROJECT LEADER: G. EDWARDS	DRAWN BY: J. BURKE
DESIGNED BY: K. RICHARDSON	CHECKED BY: G. GOYETTE
BORING PLAN SHEET 4	SHEET 90 OF 91

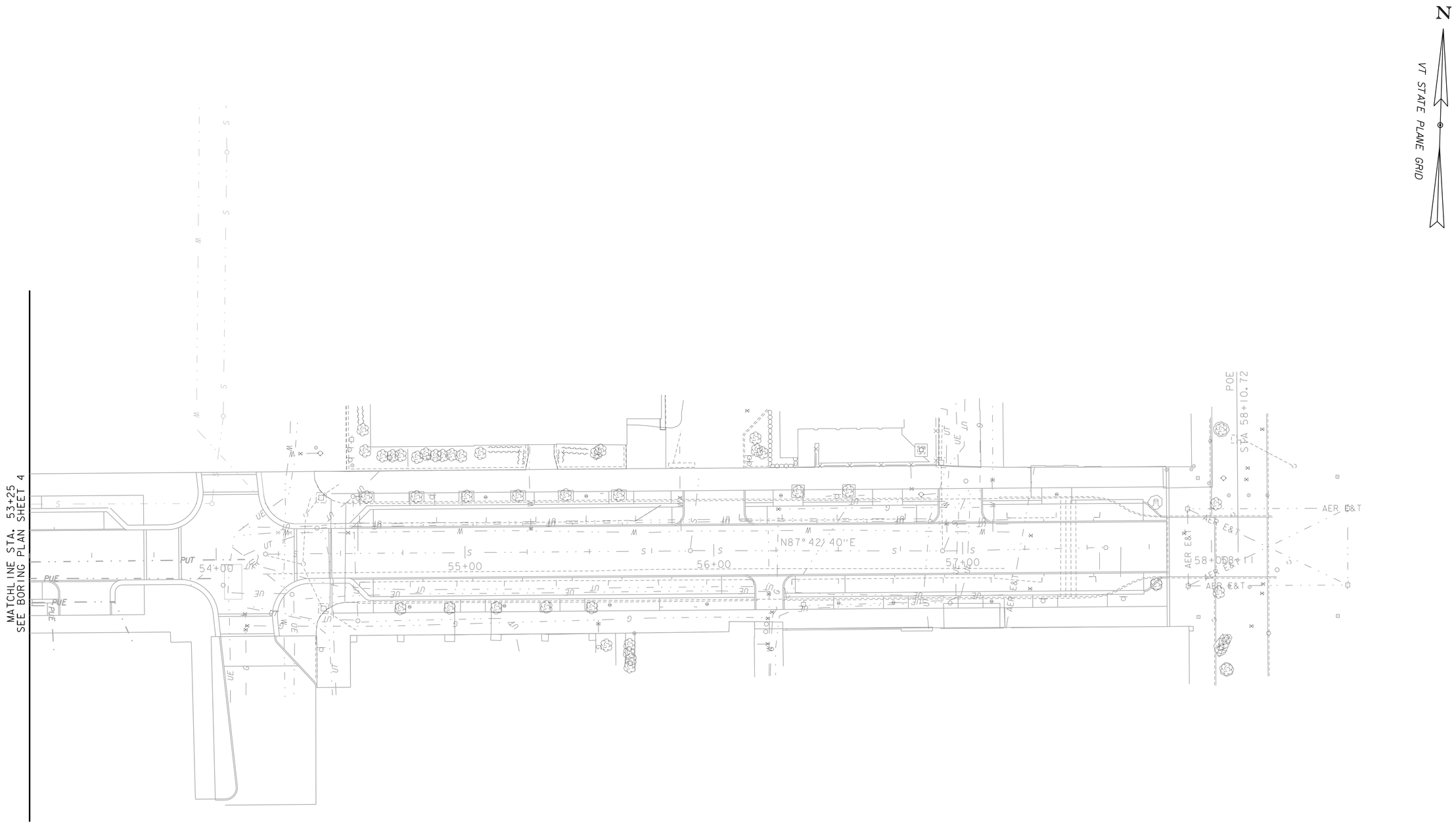

0 20 40
SCALE

Stantec

PROJECT NAME: CITY OF BURLINGTON	
PROJECT NUMBER: 195311541	
FILE NAME: 11541bdr_bor.dgn	PLOT DATE: 6/29/2018
PROJECT LEADER: G. EDWARDS	DRAWN BY: J. BURKE
DESIGNED BY: K. RICHARDSON	CHECKED BY: G. GOYETTE
BORING PLAN SHEET 5	SHEET 91 OF 91