Steve Roy, PE
DPW Project Engineer

Megan Moir
Stormwater Program Manager

P.O. Box 849
BURLINGTON, VT
05402
(802) 863-9094 P
(802) 863-0466 F

REQUEST FOR PROPOSALS (RFP)
CONSULTANT SERVICES

Development of a Hydrologic & Hydraulic Model of the Combined Sewer System

Date of Issuance: August 16, 2013

Issued by: City of Burlington Department of Public Works

Due Date for Questions: August 28, 2013 by 2 p.m. (please submit via email)
(responses will be posted on August 30, by 4 p.m.)

Due Date for Proposals: **September 6, 2013, by 2 p.m.**

Issuing Point of Contact:
Steve Roy, Project Engineer, Burlington Public Works
53 Lavalley Lane, Burlington, VT 05401
802.865.7258
sroy@burlingtonvt.gov

INTRODUCTION AND GENERAL SCOPE OF WORK

The City of Burlington (City) is issuing this Request for Proposals (RFP) for consultant services to assist in the development of a hydrologic/hydraulic (H&H) model of its combined sewer system for the Main WWTP. This model will replace a modified version of SWMM supplied to the City by Metcalf & Eddy around 1986 that still runs on computers having earlier versions of MS-DOS. The new model shall be developed using the latest version of PCSWMM from Computational Hydraulics International (chiwater.com). This model will assist us in understanding and planning for the effects of climate change on our system and in designing both grey and green infrastructure solutions to mitigate peak flows in the combined sewer system to the Main WWTP.

The general scope of work involves using city supplied data to construct a model of Main WWTP combined sewer system using PCSWMM. The consultant will be responsible for delineating subwatersheds and identifying sub-watershed characteristics (connected/disconnected % impervious surface). Any field verification of mapping and/or additional inventory of structures will be identified by the consultant but then performed by the City. Strategically placed flow-meters shall be used to capture baseflows and a pre-determined number of significant storm events for model calibration and verification. As far as scale of effort goes, the original SWMM model contained a total of 345 subcatchments and 1553 elements (pipes and manholes). The consultant should review the City data (which will be made available based on an intent to bid) to determine the current # of possible

elements.

CITY SUPPLIED DATA/EFFORT (see examples in Appendix A)

- Draft (in final QA/QC process) GIS files containing georeferenced manholes, catch basins and pipes. From earlier Lidar and Quickbird satellite data we also have 2' contours. A field in the manhole attribute table contains rim elevations based upon the Lidar data. While these elevations differ from the 1980 manhole logs, we believe they are actually more reliable since there is no way to confirm how benchmark elevations were originally obtained. Note that while the original model contained relative elevations (i.e. pipe slope & length, distance above invert), the new model will contain actual elevation data.
    - *For the purposes of this proposal, it should be assumed that the City will be reviewing the mapping data available for this sewershed in the early period of the contract and will resolve any discrepancies found during this effort or by the consultant as work proceeds.*
- Total Impervious Surface (based on a combination of 2012 and 2009 data). Impervious surface for commercial parcels (much of downtown) is derived from manual impervious delineations, while impervious surface for other property types is from 2009 NAIP classified imagery. We believe that newer orthophotography (4 band color and B&W) may be available in late 2013 and the City would make this available if it available.
- Scanned manhole log sheets for many manholes showing all pipes in & out, original rim elevations as mentioned above and pipe invert distances from rim.
    - *For the purposes of this proposal, it should be assumed that the consultant will identify any structures for which additional information is necessary to complete the model and the City will obtain this data.*
- All available data from the original model work by Metcalf & Eddy. This includes:
    - The compiled, executable M&E version of SWMM.
    - Original input (.dat) and output (.lst) data files of the 12 subareas in the Main plant collection system for 1 and 10 year storm events. These subareas were necessary since old versions of SWMM could only support up to150 elements.
    - Modified input data files that reflect sewer separation work done in the late 1980s.
    - Scan of the original hand-drawn sheet showing all the subareas and elements such as pipes, nodes, and inlets. The original sheet is also available upon request.
    - Chart showing the flow schematic of the 12 subareas and their relationship to each other.
    - Draft Report of the North and Main Sewer System by Metcalf & Eddy (1986).
- Scans of sewer separation work completed in the late 1980s that may not have been incorporated into the DOS SWMM model. These plans should be incorporated into the draft GIS dataset.

To receive the complete data set of the above items, please email sroy@burlingtonvt.gov for access to a DropBox folder.

DEADLINE FOR RECEIPT OF PROPOSALS

All replies and proposals in response to the Request for Proposal must be received in a sealed envelope clearly marked "Combined Sewer H&H Model" to the address and point of contact no later than **2:00 p.m**. on the above due date at which time all submitted proposals will be publicly opened and recorded. Late proposals will not be accepted. Electronic proposals are preferred as long as they are received by the point of contact by the required deadline.

ANSWERS TO QUESTIONS AND REVISIONS TO REQUEST FOR PROPOSAL

Any revisions, addendums and answers to questions received by the deadline (4 pm, August 28th) will

be posted on the City's RFP web page http://burlingtonvt.gov/RFP/. It is advised that consultants sign up for the GovDelivery notification so that they will be notified of any changes to the RFP page.

SITE VISIT
There will be no scheduled pre-bid site visits.

PARTNERSHIPS
Consultants may team up with other firms, local or otherwise, in order to provide whatever diversity is deemed necessary for completing the project tasks.

PROPOSAL FORMAT
Consultants are encouraged to be concise. All proposals must include, but are not limited to the following:

1. Letter of Transmittal and three (3) copies of the proposal (preferably double-sided) if sent through the mail. If sent electronically, all documents shall be in pdf format.
2. Proposed scope of work
3. Lump sum bid price and estimated time to complete the project and achieve the goal of an operational, calibrated and verified model.
4. A brief description of your firm's history and experience with SWMM-based modeling and use of PCSWMM. If your firm intends to partner with another company, also provide pertinent information on the subconsultant.
5. A work history of up to three (3) related projects showing for each:
    a. Name, address and phone number for each client.
    b. Brief project description.
    c. Statement as to whether project was completed on time and within budget.
6. Location of the office from which the management of the project will take place.

PROPOSAL EVALUATION
Proposals will be reviewed and evaluated by Department staff based on the information provided in the proposal. Additional information may be requested prior to final selection. It is anticipated that a decision will be made within 30 days of the due date. The selected consultant shall be willing to enter into an agreement with the Owner similar to the Draft Agreement Example provided in Appendix B.

CONTRACT REQUIREMENTS
Consultants are advised to review the Draft Agreement example (Appendix B), standard Burlington Consultant Contract Provisions (Attachment C), and the Livable Wage, Outsourcing Policy, and Union Deterrence Ordinances (Attachment D) in advance of submitting a proposal. The City of Burlington reserves the right to alter or amend any or all of these provisions in the project contract.

INDEMNIFICATION
The Consultant will act in an independent capacity and not as officers or employees of the Municipality. The Consultant shall indemnify, defend and hold harmless the Municipality and its officers and employees from liability and any claims, suits, expenses, losses, judgments, and damages arising as a result of the Consultant's acts and/or omissions in the performance of this contract.

The Municipality is responsible for its own actions. The Consultant is not obligated to indemnify the Municipality or its officers, agents and employees for any liability of the Municipality, its officers, agents and employees attributable to its, or their own, negligent acts, errors or omissions.

LIMITATIONS OF LIABILITY

The City of Burlington, Vermont assumes no responsibility and liability for costs incurred by parties responding to this RFP or responding to any further requests for interviews, additional data, etc., prior to the issuance of the contract.

REJECTION OF PROPOSALS

The City of Burlington reserves the right to reject any or all proposals, to negotiate with one or more parties, or to award the contract in the City's best interests, including proposed contractor's schedule. The City reserves the right to re-advertise for additional proposals and to extend the deadline for submission of the proposals.

OWNERSHIP OF DOCUMENTS

Proposals, plans, specifications, basis of designs, electronic data, designs and reports prepared under any agreement between the selected contractor or consultant and the city shall become the property of the City. Records shall be furnished to the City by the Contractor upon request at any time, however the Contractor or Consultant may retain copies of the original documents.

APPENDIX A –EXAMPLES OF OWNER-SUPPLIED DATA

GIS Screenshot Showing Pertinent Information

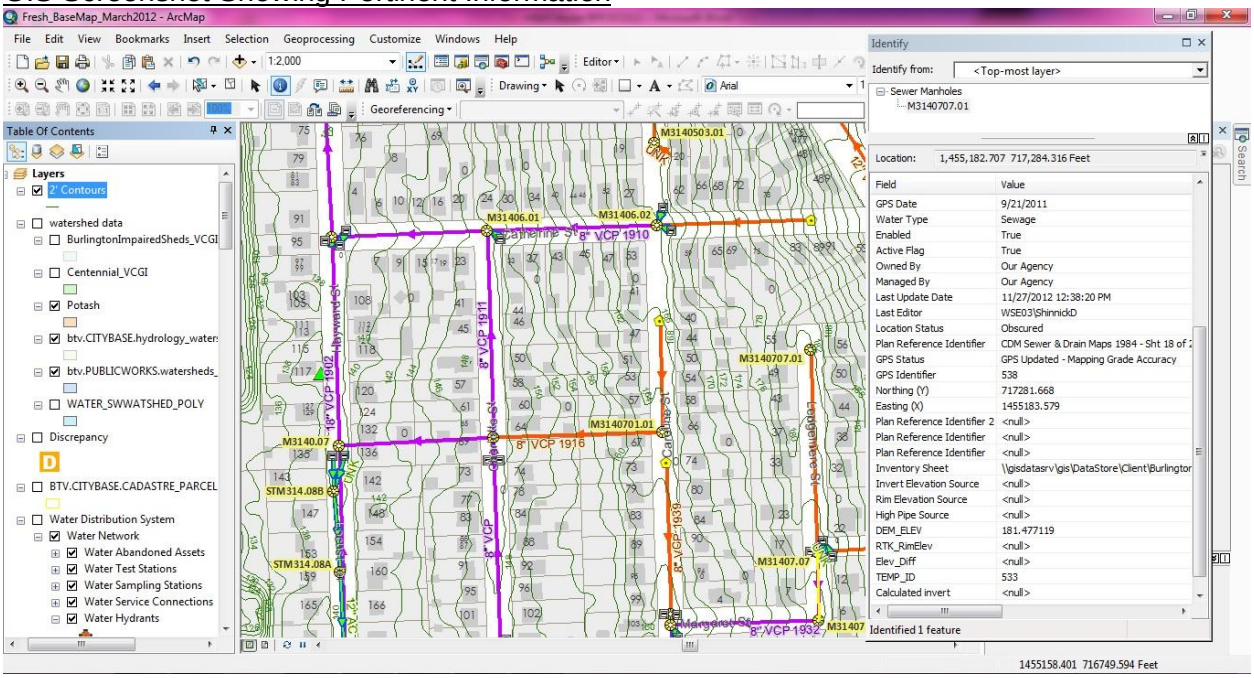

Manhole Inventory Sheet

M 3.7

MANHOLE NUMBER M 3140707.01

MANHOLE INVENTORY SHEET

Location of Manhole 380': North of intersect Marian & Lodgeme (on Lodgeme)

Date of inventory 4/16/80 Time 10:00 a.m. p.m. By F.A

System conditions: Gnd.water, High ___ Normal ___ Low ✓; Storm run-off ✓; Spring run-off ___

List and date of work in manhole since inventory date: ___

N

SKETCH

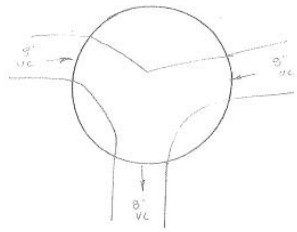

Invert (Dia./inf. or eff.)		Depth (From rim)	Elevation (Invert)
8" vc	inf	7.7	
8" vc	inf	7.6	
8" vc	inf	7.6	

RIM ELV. ___

SOURCE OF LEVEL RUN AND DATUM ___

MANHOLE CONDITION AND COMMENT

Size and Construction 4' P Brick

Frame and Cover: Size: 22" Poh; not level w/pave

Steps rusted shaky

Walls (Cracks or infiltration) good

Table (Debris) good

Invert sewage in invert

Flow: Depth dry;

Other Comment

(Overflow details)

SWMM Input Data (partial file from M1des1.dat. We have the manual that describes all this data).

```
  1
  9
M1DES1.HYD
  0 12 77  9  0  0  0  0  0  0  0  0  0  0  0  0  0  0  0  0
  1  2  3  4 13
RUNOFF
A1MAIN SYSTEM M1
A1                  1 YR. DESIGN STORM
B1  0 0 0   1   0   0   1  19   0   1   1  85
B2    150  10.  25.
E1     24  30.
E2   0.05 0.09 0.09 0.11 0.11 0.15 0.15 0.20 0.20 0.32                    (Rainfall Data)
E2   0.32 0.76 0.76 0.32 0.32 0.20 0.20 0.15 0.15 0.11
E2   0.11 0.09 0.09 0.05
F1   0.00 0.00 0.00 0.00 0.00 0.00 0.00 0.00 0.00 0.00 0.00 0.00
G2
H1  1   1  103 500.  1.2  23.0.0130.013 0.250.062 0.25  3.0 0.52   0.00115   (Subcatchment Data)
H1  1   2  101 240.  0.8  32.0.0130.013 0.250.062 0.25  3.0 0.52   0.00115
H1  1   3   99 300.  1.1  14.0.0040.013 0.250.062 0.25  3.0 0.52   0.00115
H1  1   4   971040.  4.5  15.0.0040.013 0.250.062 0.25  3.0 0.52   0.00115
H1  1   5   95 645.  2.9  15.0.0120.013 0.250.062 0.25  3.0 0.52   0.00115
H1  1   6   93 400.  1.2  27.0.0160.013 0.250.062 0.25  3.0 0.52   0.00115
H2
M1 36   1
M2103  101   99   97   95   93   89   91   87   81   85  124   22   58   20   79
M2 73   71   83   67   65   63    6    4    8   10   54   56   46   44   14   18
M2 29   39   33   37
COMBINE
MAIN SYSTEM M1
M3,M2 INTO M1
     150       38       0      600      19.0        3
   8  10  12
M3DES1.HYD     M2DES1.HYD                                                 (Combine block to where
  333  222  103  101   99   97   95   93   89   91   87   81   85  124   22   58   hydrographs from upstream
   20   79   73   71   83   67   65   63    6    4    8   10   54   56   46   44   subareas are added)
   14   18   29   39   33   37
TRANSPORT
   0   0
1 MAIN SYSTEM M1 1 YR. DESIGN STORM
  109  150   38    2   13    3    0    0    4    1
     600.     .0001        3.                                             (Element Data)
   1    1    0    1    1    1
 199   3        16
   3   4        3   140.    3.5    .38   .015                  12.4

   4   5        16
   5   6        3   225.    3.5    .36   .015                  11.5

   6   7  62     16
   7   8        3   165.    3.5    .73   .015                  10.5
```

```
 8   9        16
 9  10         3   440.    3.5    .14   .015                    9.4

 10  11        16
 11 198         3   130.    3.5    .30   .015                    9.3

198  13        16
 13  14         3   155.    3.5    .35   .015                    9.5

 14  15  41    16
 15  16         3   140.   3.17    .36   .015                   10.8

 16  17  32    16
 17  18         1   720.   1.50    .28   .015                    7.6

 18  19        16
 19  20         1   345.   1.50    .36   .015                    7.7

 20  21  24    16
 21  22         1   400.   .667    .63   .015                    8.4

 22  23        16
 23 124         1   330.   .667    .67   .015                    9.1

124            16
 24  25         1   280.   1.25    .43   .015                    7.5

170 171        16
171  25         1    10.   1.50    .43   .015                    7.0

 198  199  170
  22   20
 198  199  170  222  333   16   42  180  182   58   48   25   20
        708.3
  52          6.0
```

(Specifies which elements have their flow information printed out)

ENDPROGRAM

SWMM Output Data (full printout from M1des1.lst)

```
1

        ENVIRONMENTAL PROTECTION AGENCY - STORM WATER MANAGEMENT MODEL ***  RELEASE III.3 ***

            DEVELOPED BY       METCALF & EDDY, INC.

                        UNIVERSITY OF FLORIDA

                        WATER RESOURCES ENGINEERS, INC.

            SEPTEMBER 1970

            UPDATED BY THE UNIVERSITY OF FLORIDA

            MARCH     1975

            NOVEMBER  1977

            NOVEMBER  1981

              AUGUST  1983


                        THIS IS A NEW RELEASE OF THE SWMM. IF ANY PROBLEMS

                        OCCUR IN RUNNING THIS MODEL PLEASE CONTACT WAYNE

                        HUBER AT THE UNIVERSITY OF FLORIDA.

                        PHONE 1-904-392-0846




 *******************************************************

   THIS IS PC VERSION OF METCALF & EDDY TRANSPORT BLOCK
   COUPLED WITH EPA SWMM V3 RUNOFF, EXEC & M&E COMBINE

 *******************************************************
   1
   9
M1DES1.HYD
0DISK OR TAPE ASSIGNMENTS FOR BLOCKS CALLED. THEY ARE IN THE SAME ORDER IN WHICH THE BLOCKS ARE
CALLED.
```

JIN(1)	JIN(2)	JIN(3)	JIN(4)	JIN(5)	JIN(6)	JIN(7)	JIN(8)	JIN(9)	JIN(10)
0	77	0	0	0	0	0	0	0	0

JOUT(1)	JOUT(2)	JOUT(3)	JOUT(4)	JOUT(5)	JOUT(6)	JOUT(7)	JOUT(8)	JOUT(9)	JOUT(10)
12	9	0	0	0	0	0	0	0	0

SCRATCH DISKS OR TAPES WHICH CAN BE USED BY ANY BLOCK CALLED.

NSCRAT(1)	NCSRAT(2)	NSCRAT(3)	NSCRAT(4)	NSCRAT(5)
1	2	3	4	13

1RUNOFF BLOCK CALLED.

ENTRY MADE TO RUNOFF BLOCK

RUNOFF BLOCK WAS LAST UPDATED BY THE UNIVERSITY OF FLORIDA JANUARY 1983.

MAIN SYSTEM M1

1 YR. DESIGN STORM

CONTINUOUS SWMM PARAMETER - ICRAIN..... 0

SNOWMELT PARAMETER - ISNOW..... 0

NUMBER OF RAIN GAGES - NRGAG..... 1

HORTON IFILTRATION EQUATION USED - INFILM..... 0

QUALITY IS NOT SIMULATED - KWALTY..... 0

READ MONTHLY EVAPORATION DATA ON CARD F1..... 1

HOUR OF DAY AT START OF STORM - NHR..... 19

MINUTE OF HOUR AT START OF STORM - NMN..... 0

TIME TZERO AT START OF STORM (HOURS)..... 19.000

USE U.S. CUSTOMARY UNITS FOR MOST I/O - METRIC... 0

INPUT NUMBER OF TIME STEPS - NSTEP..... 150

INTEGRATION TIME INTERVAL (MINUTES) - DELT..... 10.00

MONTH, DAY, YEAR OF START OF STORM IS: 1/ 1/85

PERCENT OF IMPERVIOUS AREA WITH ZERO DETENTION DEPTH 25.0

**HORTON INFILTRATION MODEL BEING USED
RATE FOR REGENERATION OF INFILTRATION = REGEN * DECAY
DECAY IS READ IN FOR EACH SUBCATCHMENT
REGEN = ... 0.01000
1

FOR 24 RAINFALL STEPS, THE TIME INTERVAL IS 30.00 MINUTES UNITS ARE IN/HR.

FOR RAINGAGE NUMBER 1, TIME IS 0.0 HOURS OR 0.0 DAYS FROM START OF STORM, RAINFALL HISTORY IS

0.05	0.09	0.09	0.11	0.11	0.15	0.15	0.20	0.20	0.32
0.32	0.76	0.76	0.32	0.32	0.20	0.20	0.15	0.15	0.11
0.11	0.09	0.09	0.05						

CARD GROUP F1

EVAPORATION RATE (IN/DAY).

JAN.	FEB.	MAR.	APR.	MAY	JUN.	JUL.	AUG.	SEP.	OCT.	NOV.	DEC.
0.00	0.00	0.00	0.00	0.00	0.00	0.00	0.00	0.00	0.00	0.00	0.00

* * * * * NO GUTTER OR PIPE NETWORK * * * * *
1

* * * * * S U B C A T C H M E N T D A T A * * * * *

SUBCATCH- MENT NO.	GUTTER OR INLET	WIDTH (FT)	AREA (AC)	PERCENT IMPERV.	SLOPE (FT/FT)	RESISTANCE FACTOR IMPERV.	RESISTANCE FACTOR PERV.	DEPRES. STORAGE(IN) IMPERV.	DEPRES. STORAGE(IN) PERV.	INFILTRATION RATE(IN/HR) MAXIMUM	INFILTRATION RATE(IN/HR) MINIMUM	DECAY RATE (1/SEC)	GAGE NO.
1	1	103	500.00	1.20	23.00	0.0130	0.013	0.250	0.062	0.250	3.00	0.52	0.00115	1
2	2	101	240.00	0.80	32.00	0.0130	0.013	0.250	0.062	0.250	3.00	0.52	0.00115	1

3	3	99	300.00	1.10	14.00	0.0040	0.013	0.250	0.062	0.250	3.00	0.52	0.00115	1
4	4	97	1040.00	4.50	15.00	0.0040	0.013	0.250	0.062	0.250	3.00	0.52	0.00115	1
5	5	95	645.00	2.90	15.00	0.0120	0.013	0.250	0.062	0.250	3.00	0.52	0.00115	1
6	6	93	400.00	1.20	27.00	0.0160	0.013	0.250	0.062	0.250	3.00	0.52	0.00115	1
7	7	89	300.00	0.60	68.00	0.0040	0.013	0.250	0.062	0.250	3.00	0.52	0.00115	1
8	8	91	700.00	1.10	35.00	0.0040	0.013	0.250	0.062	0.250	3.00	0.52	0.00115	1
9	9	87	400.00	1.50	38.00	0.0030	0.013	0.250	0.062	0.250	3.00	0.52	0.00115	1
10	10	81	500.00	0.90	47.00	0.0080	0.013	0.250	0.062	0.250	3.00	0.52	0.00115	1
11	11	85	490.00	3.50	22.00	0.0060	0.013	0.250	0.062	0.250	3.00	0.52	0.00115	1
12	12	124	250.00	1.10	34.00	0.0060	0.013	0.250	0.062	0.250	3.00	0.52	0.00115	1
13	13	22	310.00	1.10	27.00	0.0090	0.013	0.250	0.062	0.250	3.00	0.52	0.00115	1
14	14	58	530.00	2.90	21.00	0.0020	0.013	0.250	0.062	0.250	3.00	0.52	0.00115	1
15	15	20	400.00	0.90	36.00	0.0010	0.013	0.250	0.062	0.250	3.00	0.52	0.00115	1
16	16	20	260.00	0.60	33.00	0.0030	0.013	0.250	0.062	0.250	3.00	0.52	0.00115	1
17	17	79	750.00	2.80	26.00	0.0040	0.013	0.250	0.062	0.250	3.00	0.52	0.00115	1
18	18	73	590.00	2.60	31.00	0.0020	0.013	0.250	0.062	0.250	3.00	0.52	0.00115	1
19	19	71	440.00	1.90	46.00	0.0110	0.013	0.250	0.062	0.250	3.00	0.52	0.00115	1
20	20	83	1320.00	3.20	24.00	0.0060	0.013	0.250	0.062	0.250	3.00	0.52	0.00115	1
21	21	67	460.00	1.00	25.00	0.0080	0.013	0.250	0.062	0.250	3.00	0.52	0.00115	1
22	22	65	580.00	3.50	27.00	0.0070	0.013	0.250	0.062	0.250	3.00	0.52	0.00115	1
23	23	63	380.00	1.80	22.00	0.0070	0.013	0.250	0.062	0.250	3.00	0.52	0.00115	1
24	24	63	960.00	1.90	31.00	0.0120	0.013	0.250	0.062	0.250	3.00	0.52	0.00115	1
25	25	6	400.00	0.80	34.00	0.0100	0.013	0.250	0.062	0.250	3.00	0.52	0.00115	1
26	26	6	300.00	2.20	14.00	0.0140	0.013	0.250	0.062	0.250	3.00	0.52	0.00115	1
27	27	4	550.00	2.50	21.00	0.0190	0.013	0.250	0.062	0.250	3.00	0.52	0.00115	1
28	28	8	550.00	3.50	18.00	0.0020	0.013	0.250	0.062	0.250	3.00	0.52	0.00115	1
29	29	10	230.00	2.80	22.00	0.0100	0.013	0.250	0.062	0.250	3.00	0.52	0.00115	1
30	30	54	480.00	2.20	17.00	0.0020	0.013	0.250	0.062	0.250	3.00	0.52	0.00115	1
31	31	56	460.00	1.10	28.00	0.0080	0.013	0.250	0.062	0.250	3.00	0.52	0.00115	1
32	32	46	800.00	1.80	26.00	0.0040	0.013	0.250	0.062	0.250	3.00	0.52	0.00115	1
33	33	46	600.00	1.80	13.00	0.0060	0.013	0.250	0.062	0.250	3.00	0.52	0.00115	1
34	34	44	600.00	1.40	24.00	0.0040	0.013	0.250	0.062	0.250	3.00	0.52	0.00115	1
35	35	14	620.00	0.80	49.00	0.0110	0.013	0.250	0.062	0.250	3.00	0.52	0.00115	1
36	36	18	1400.00	4.00	19.00	0.0040	0.013	0.250	0.062	0.250	3.00	0.52	0.00115	1
37	37	18	640.00	1.50	25.00	0.0040	0.013	0.250	0.062	0.250	3.00	0.52	0.00115	1
38	38	29	510.00	2.90	21.00	0.0030	0.013	0.250	0.062	0.250	3.00	0.52	0.00115	1
39	39	29	530.00	3.20	23.00	0.0030	0.013	0.250	0.062	0.250	3.00	0.52	0.00115	1
40	40	39	200.00	1.90	30.00	0.0060	0.013	0.250	0.062	0.250	3.00	0.52	0.00115	1
41	41	33	900.00	7.80	21.00	0.0030	0.013	0.250	0.062	0.250	3.00	0.52	0.00115	1
42	42	37	400.00	2.10	25.00	0.0100	0.013	0.250	0.062	0.250	3.00	0.52	0.00115	1

0TOTAL NUMBER OF SUBCATCHMENTS.. 42
0TOTAL TRIBUTARY AREA (ACRES).... 88.90
0IMPERVIOUS AREA (ACRES)..... 21.51
0PERVIOUS AREA (ACRES)..... 67.39
0TOTAL WIDTH (FEET)..... 22915.00
0PERCENT IMPERVIOUSNESS..... 24.20
1 * * * * * ARRANGEMENT OF SUBCATCHMENTS AND GUTTERS/PIPE * * * * *

0 INLET TRIBUTARY GUTTERS AND/OR PIPES TRIBUTARY SUBAREAS

103
+ 1

101
+ 2

99
+ 3

97
+ 4

95
+ 5

93
+ 6

89
+ 7

91
+ 8

87
+ 9

81
+ 10

85
+ 11

124
+ 12

22
+ 13

58
+ 14

20
+ 15 16

79
+ 17

73
+ 18

71
+ 19

83
+ 20

67
+ 21

65
+ 22

63
+ 23 24

6
+ 25 26

4
+ 27

8
+ 28

10
+ 29

54
+ 30

56
+ 31

46
+ 32 33

44
+ 34

14
+ 35

18
+ 36 37

29
+ 38 39

39
+ 40

33
+ 41

37

```
+                                                  42


        HYDROGRAPHS WILL BE STORED FOR THE FOLLOWING  36 INLETS

          103      101       99       97       95       93       89       91       87       81
           85      124       22       58       20       79       73       71       83       67
           65       63        6        4        8       10       54       56       46       44
           14       18       29       39       33       37
1         .....QUALITY SIMULATION NOT INCLUDED IN THIS RUN  .....



 * * *  CARD GROUP M1  * * *


 TOTAL NUMBER OF PRINTED GUTTERS/INLETS...NPRNT..   36
 NUMBER OF TIME STEPS BETWEEN PRINTINGS..INTERV..    1
 STARTING AND STOPPING PRINTOUT DATES............     0     0
                                                     0     0
                                                     0     0
                                                     0     0
                                                     0     0


 * * *  CARD GROUP M2 * * *


 GUTTER INLET PRINT CARDS......   103   101    99    97    95    93    89    91    87    81
                                   85   124    22    58    20    79    73    71    83    67
                                   65    63     6     4     8    10    54    56    46    44
                                   14    18    29    39    33    37



 MESSAGE FROM SUBROUTINE HYDRO...      THE PLOTTING INTERVAL FOR SUBROUTINE HCURVE IS..      1 TIME
STEPS



 END OF TIME STEP DO-LOOP IN RUNOFF.

 FINAL DATE (MO/DAY/YEAR) =  1/ 2/85
 FINAL JULIAN DATE =   2
 FINAL TIME OF DAY = 20.0000 HOURS.
 FINAL RUNNING TIME =  0.1584000E+06 SECONDS.
```

TOTAL NUMBER OF TIME STEPS = 150

```
1
        1.000 I---------I---------I---------I---------I---------I---------I---------I---------I---------I---------I
            |                                                                                   |
            |                                                                                   |
            |                                                                                   |
            |                                                                                   |
            |                                                                                   |
            |                                                                                   |
            |                                                                                   |
            |                                                                                   |
            |                                                                                   |
        0.800 -                                                                                 -
            |                                                                                   |
            |                  ******                                                             |
            |                  *   *                                                            |
            |                  *   *                                                            |
            |                  *   *                                                            |
            |                  *   *                                                            |
            |                  *   *                                                            |
            |                  *   *                                                            |
            |                  *   *                                                            |
        0.600 -                    *   *                                                          -
            |                  *   *                                                            |
            |                  *   *                                                            |
  RAINFALL      I                  *   *                                                            I
            |                  *   *                                                            |
   IN        I                  *   *                                                            I
            |                  *   *                                                            |
  IN /  HR      I                  *   *                                                            I
            |                  *   *                                                            |
            |                  *   *                                                            |
        0.400 -                    *   *                                                          -
            |                  *   *                                                            |
            |                  *   *                                                            |
            |                  *   *                                                            |
            |                ******   ******                                                        |
            |                *        *                                                           |
            |                *        *                                                           |
            |                *        *                                                           |
            |                *        *                                                           |
            |                *        *                                                           |
        0.200 -                ******        ******                                                    -
            |            *            *                                                           |
            |          ******            ******                                                        |
            |          *                 *                                                           |
            |          *                 *                                                           |
            |     ***********                 ***********                                                    I
            |     *                          *                                                          |
            |   ****                           ***                                                        I
            |   *                              *                                                          |
            |   *                              *                                                          |
```

```
0.000 I----*----I---------I---------I---------I---------I---------I-------*-I---------I---------I---------I
   18.0     20.0     22.0     24.0     26.0     28.0     30.0     32.0     34.0     36.0     38.0

                                   TIME IN HOURS

   RAINFALL HYETOGRAPH                                INLETS     36

              HYETOGRAPH FOR RAIN GAGE NUMBER 1
1
25.000 I---------I---------I---------I---------I---------I---------I---------I---------I---------I---------I
       |                                                          |
       |                                                          |
       |                                                          |
       |                                                          |
       |                                                          |
       |                                                          |
       |                                                          |
       |                                                          |
       |             *                                            |
20.000 -               *                                           -
       |             *                                            |
       |             *                                            |
       |             *                                            |
       |             *                                            |
       |             **                                           |
       |             **                                           |
       |             ***                                          |
       |             ***                                          |
       |             * *                                          |
15.000 -               ** *                                        -
       |            * *                                           |
       |            * *                                           |
RUNOFF I              * *                                          I
       |            * *                                           |
 IN    I             * *                                          I
       |            * *                                           |
 CFS   I              * *                                         I
       |            * *                                           |
       |            * *                                           |
10.000 -               * *                                         -
       |            * *                                           |
       |            * *                                           |
       |            * *                                           |
       |            * *                                           |
       |           * * **                                         I
       |           *** ***                                        I
       |           **  ***                                        I
       |           *   * *                                        I
       |           *   * *                                        I
 5.000 -             *   * *                                       -
       |          ***    ***                                      I
       |         *      ***                                       I
```

```
          |        ***       ***                                  |
          |        **       ***                                  |
          |       ***         ***                                 |
          |      **            ***                                |
          |      *              *                                |
          |      *              **                                |
          |     **               *                                |
    0.000 |-------*-|---------|---------|-------*********************************---------|---------|---------|
          16.0    20.0    24.0    28.0    32.0    36.0    40.0    44.0    48.0    52.0    56.0

                                        TIME IN HOURS

          INLET HYDROGRAPH                                INLETS    36



                    THE HYDROGRAPH IS THE SUM OF THE FLOW IN ALL INLETS
1
    1.000 |---------|---------|---------|---------|---------|---------|---------|---------|---------|---------|
          |                                                          |
          |                                                          |
          |                                                          |
          |                                                          |
          |                                                          |
          |                                                          |
          |                                                          |
          |                                                          |
          |                                                          |
    0.800 -                                                            -
          |                                                          |
          |                                                          |
          |                                                          |
          |                                                          |
          |                                                          |
          |                                                          |
          |                                                          |
          |             *                                            |
          |             *                                            |
    0.600 -               *                                            -
          |             *                                            |
          |             **                                           |
 INFIL-      |              **                                          |
          |             *****                                        |
 TRATION     |              *   *                                         |
          |            *   *                                         |
 IN/ HR      |              *   *                                         |
          |            *   *                                         |
          |            *   *                                         |
    0.400 -              *   *                                         -
          |            *   *                                         |
          |            *   *                                         |
```

```
        |          *  *                                    |
        |         ***   *                                   |
        |         *    *                                   |
        |         *    *                                   |
        |         *    *                                   |
        |         *    *                                   |
        |         *    *                                   |
0.200 -          ***    ***                                    -
        |        *       *                                  |
        |       ***       **                                  |
        |       **       * *                                  |
        |      ***        *                                   |
        |    ******         *****                                 |
        |    *            ***                                  |
        |    *              **                                 |
        |   **               *                                 |
        |   *                *                                 |
0.000 |-------*-|---------|---------|-------**********************************---------|---------|---------|
   16.0     20.0     24.0     28.0     32.0     36.0     40.0     44.0     48.0     52.0     56.0

                                    TIME IN HOURS

   INFILTRATION VERSUS TIME                          INLETS     36
```

THE INFILTRATION PLOT IS THE ACTUAL INFILTRATION OVER THE PERVIOUS AREA ONLY

1

$ $ $ --- CONTINUITY CHECK FOR QUANTITY --- $ $ $

	CUBIC FEET	INCHES OVER TOTAL BASIN
0TOTAL PRECIPITATION (RAIN PLUS SNOW)	8.229028E+05	2.550
0TOTAL INFILTRATION	6.237955E+05	1.933
0TOTAL EVAPORATION	-1.548501E-04	0.000
0TOTAL GUTTER/PIPE/SUBCAT FLOW AT INLETS	1.969321E+05	0.610
0TOTAL WATER REMAINING IN GUTTER/PIPES	0.000000E-01	0.000
0TOTAL WATER REMAINING IN SURFACE STORAGE	3.633822E+03	0.011

INFILTRATION OVER THE PERVIOUS AREA... 6.237955E+05 2.550

INFILTRATION + EVAPORATION +
SNOW REMOVAL + INLET FLOW +
WATER REMAINING IN GUTTER/PIPES +
WATER REMAINING IN SURFACE STORAGE +
WATER REMAINING IN SNOW COVER..... 8.243615E+05 2.555

THE ERROR IN CONTINUITY IS CALCULATED AS

```
****************************************
* PRECIPITATION + INITIAL SNOW COVER  *
*      - INFILTRATION -               *
*EVAPORATION - SNOW REMOVAL -         *
*INLET FLOW - WATER IN GUTTER/PIPES - *
*WATER IN SURFACE STORAGE -           *
*WATER REMAINING IN SNOW COVER        *
*-------------------------------------*
* PRECIPITATION + INITIAL SNOW COVER  *
****************************************
```

ERROR..... -0.177 PERCENT

1

MAIN SYSTEM M1

1 YR. DESIGN STORM

SUMMARY OF QUANTITY RESULTS (INFLOW IN CFS) AT LOCATION 103

DATE MO/DA/YR	TIME HR:MIN	FLOW CFS
1/ 1/85	19 10.0	0.004
1/ 1/85	19 20.0	0.003
1/ 1/85	19 30.0	0.004
1/ 1/85	19 40.0	0.007
1/ 1/85	19 50.0	0.006
1/ 1/85	19 60.0	0.030
1/ 1/85	20 10.0	0.024
1/ 1/85	20 20.0	0.026
1/ 1/85	20 30.0	0.025
1/ 1/85	20 40.0	0.033
1/ 1/85	20 50.0	0.030
1/ 1/85	20 60.0	0.031
1/ 1/85	21 10.0	0.031
1/ 1/85	21 20.0	0.031
1/ 1/85	21 30.0	0.031
1/ 1/85	21 40.0	0.046
1/ 1/85	21 50.0	0.040
1/ 1/85	21 60.0	0.042
1/ 1/85	22 10.0	0.041
1/ 1/85	22 20.0	0.042
1/ 1/85	22 30.0	0.042

1/ 1/85	22 40.0	0.062
1/ 1/85	22 50.0	0.053
1/ 1/85	22 60.0	0.057
1/ 1/85	23 10.0	0.055
1/ 1/85	23 20.0	0.056
1/ 1/85	23 30.0	0.056
1/ 1/85	23 40.0	0.108
1/ 1/85	23 50.0	0.080
1/ 1/85	23 60.0	0.094
1/ 2/85	0 10.0	0.087
1/ 2/85	0 20.0	0.090
1/ 2/85	0 30.0	0.088
1/ 2/85	0 40.0	0.307
1/ 2/85	0 50.0	0.159
1/ 2/85	0 60.0	0.247
1/ 2/85	1 10.0	0.190
1/ 2/85	1 20.0	0.225
1/ 2/85	1 30.0	0.203
1/ 2/85	1 40.0	0.045
1/ 2/85	1 50.0	0.115
1/ 2/85	1 60.0	0.077
1/ 2/85	2 10.0	0.096
1/ 2/85	2 20.0	0.086
1/ 2/85	2 30.0	0.091
1/ 2/85	2 40.0	0.042
1/ 2/85	2 50.0	0.062
1/ 2/85	2 60.0	0.053
1/ 2/85	3 10.0	0.057
1/ 2/85	3 20.0	0.055
1/ 2/85	3 30.0	0.056

1

MAIN SYSTEM M1

1 YR. DESIGN STORM

SUMMARY OF QUANTITY RESULTS (INFLOW IN CFS) AT LOCATION 103

DATE MO/DA/YR	TIME HR:MIN	FLOW CFS
1/ 2/85	3 40.0	0.037
1/ 2/85	3 50.0	0.044
1/ 2/85	3 60.0	0.041
1/ 2/85	4 10.0	0.042
1/ 2/85	4 20.0	0.042
1/ 2/85	4 30.0	0.042
1/ 2/85	4 40.0	0.027
1/ 2/85	4 50.0	0.032
1/ 2/85	4 60.0	0.030
1/ 2/85	5 10.0	0.031
1/ 2/85	5 20.0	0.031

1/ 2/85	5 30.0	0.031
1/ 2/85	5 40.0	0.023
1/ 2/85	5 50.0	0.026
1/ 2/85	5 60.0	0.025
1/ 2/85	6 10.0	0.025
1/ 2/85	6 20.0	0.025
1/ 2/85	6 30.0	0.025
1/ 2/85	6 40.0	0.012
1/ 2/85	6 50.0	0.014
1/ 2/85	6 60.0	0.014
1/ 2/85	7 10.0	0.001
1/ 2/85	7 20.0	0.000
1/ 2/85	7 30.0	0.000
1/ 2/85	7 40.0	0.000
1/ 2/85	7 50.0	0.000
1/ 2/85	7 60.0	0.000
1/ 2/85	8 10.0	0.000
1/ 2/85	8 20.0	0.000
1/ 2/85	8 30.0	0.000
1/ 2/85	8 40.0	0.000
1/ 2/85	8 50.0	0.000
1/ 2/85	8 60.0	0.000
1/ 2/85	9 10.0	0.000
1/ 2/85	9 20.0	0.000
1/ 2/85	9 30.0	0.000
1/ 2/85	9 40.0	0.000
1/ 2/85	9 50.0	0.000
1/ 2/85	9 60.0	0.000
1/ 2/85	10 10.0	0.000
1/ 2/85	10 20.0	0.000
1/ 2/85	10 30.0	0.000
1/ 2/85	10 40.0	0.000
1/ 2/85	10 50.0	0.000
1/ 2/85	10 60.0	0.000
1/ 2/85	11 10.0	0.000
1/ 2/85	11 20.0	0.000
1/ 2/85	11 30.0	0.000
1/ 2/85	11 40.0	0.000
1/ 2/85	11 50.0	0.000

1

MAIN SYSTEM M1

1 YR. DESIGN STORM

SUMMARY OF QUANTITY RESULTS (INFLOW IN CFS) AT LOCATION 103

DATE MO/DA/YR	TIME HR:MIN	FLOW CFS
1/ 2/85	11 60.0	0.000
1/ 2/85	12 10.0	0.000

1/ 2/85	12	20.0	0.000
1/ 2/85	12	30.0	0.000
1/ 2/85	12	40.0	0.000
1/ 2/85	12	50.0	0.000
1/ 2/85	12	60.0	0.000
1/ 2/85	13	10.0	0.000
1/ 2/85	13	20.0	0.000
1/ 2/85	13	30.0	0.000
1/ 2/85	13	40.0	0.000
1/ 2/85	13	50.0	0.000
1/ 2/85	13	60.0	0.000
1/ 2/85	14	10.0	0.000
1/ 2/85	14	20.0	0.000
1/ 2/85	14	30.0	0.000
1/ 2/85	14	40.0	0.000
1/ 2/85	14	50.0	0.000
1/ 2/85	14	60.0	0.000
1/ 2/85	15	10.0	0.000
1/ 2/85	15	20.0	0.000
1/ 2/85	15	30.0	0.000
1/ 2/85	15	40.0	0.000
1/ 2/85	15	50.0	0.000
1/ 2/85	15	60.0	0.000
1/ 2/85	16	10.0	0.000
1/ 2/85	16	20.0	0.000
1/ 2/85	16	30.0	0.000
1/ 2/85	16	40.0	0.000
1/ 2/85	16	50.0	0.000
1/ 2/85	16	60.0	0.000
1/ 2/85	17	10.0	0.000
1/ 2/85	17	20.0	0.000
1/ 2/85	17	30.0	0.000
1/ 2/85	17	40.0	0.000
1/ 2/85	17	50.0	0.000
1/ 2/85	17	60.0	0.000
1/ 2/85	18	10.0	0.000
1/ 2/85	18	20.0	0.000
1/ 2/85	18	30.0	0.000
1/ 2/85	18	40.0	0.000
1/ 2/85	18	50.0	0.000
1/ 2/85	18	60.0	0.000
1/ 2/85	19	10.0	0.000
1/ 2/85	19	20.0	0.000
1/ 2/85	19	30.0	0.000
1/ 2/85	19	40.0	0.000
1/ 2/85	19	50.0	0.000
1/ 2/85	19	60.0	0.000

FLOW WT'D MEANS
+ 0.028

FLOW WT'D STD-DEVS

+ 0.693

TOTAL LOADS
+ 2543.105
CUB-FT
1
MAIN SYSTEM M1

1 YR. DESIGN STORM

SUMMARY OF QUANTITY RESULTS (INFLOW IN CFS) AT LOCATION 101

DATE MO/DA/YR	TIME HR:MIN	FLOW CFS
1/ 1/85	19 10.0	0.003
1/ 1/85	19 20.0	0.003
1/ 1/85	19 30.0	0.003
1/ 1/85	19 40.0	0.006
1/ 1/85	19 50.0	0.006
1/ 1/85	19 60.0	0.018
1/ 1/85	20 10.0	0.024
1/ 1/85	20 20.0	0.023
1/ 1/85	20 30.0	0.023
1/ 1/85	20 40.0	0.029
1/ 1/85	20 50.0	0.028
1/ 1/85	20 60.0	0.028
1/ 1/85	21 10.0	0.028
1/ 1/85	21 20.0	0.028
1/ 1/85	21 30.0	0.028
1/ 1/85	21 40.0	0.041
1/ 1/85	21 50.0	0.038
1/ 1/85	21 60.0	0.039
1/ 1/85	22 10.0	0.039
1/ 1/85	22 20.0	0.039
1/ 1/85	22 30.0	0.039
1/ 1/85	22 40.0	0.055
1/ 1/85	22 50.0	0.051
1/ 1/85	22 60.0	0.052
1/ 1/85	23 10.0	0.052
1/ 1/85	23 20.0	0.052
1/ 1/85	23 30.0	0.052
1/ 1/85	23 40.0	0.094
1/ 1/85	23 50.0	0.079
1/ 1/85	23 60.0	0.084
1/ 2/85	0 10.0	0.082
1/ 2/85	0 20.0	0.083
1/ 2/85	0 30.0	0.083
1/ 2/85	0 40.0	0.263
1/ 2/85	0 50.0	0.166
1/ 2/85	0 60.0	0.212

1/ 2/85	1 10.0	0.189
1/ 2/85	1 20.0	0.200
1/ 2/85	1 30.0	0.194
1/ 2/85	1 40.0	0.051
1/ 2/85	1 50.0	0.095
1/ 2/85	1 60.0	0.079
1/ 2/85	2 10.0	0.084
1/ 2/85	2 20.0	0.082
1/ 2/85	2 30.0	0.083
1/ 2/85	2 40.0	0.044
1/ 2/85	2 50.0	0.054
1/ 2/85	2 60.0	0.051
1/ 2/85	3 10.0	0.052
1/ 2/85	3 20.0	0.052
1/ 2/85	3 30.0	0.052

1

MAIN SYSTEM M1

1 YR. DESIGN STORM

SUMMARY OF QUANTITY RESULTS (INFLOW IN CFS) AT LOCATION 101

DATE MO/DA/YR	TIME HR:MIN	FLOW CFS
1/ 2/85	3 40.0	0.036
1/ 2/85	3 50.0	0.039
1/ 2/85	3 60.0	0.039
1/ 2/85	4 10.0	0.039
1/ 2/85	4 20.0	0.039
1/ 2/85	4 30.0	0.039
1/ 2/85	4 40.0	0.027
1/ 2/85	4 50.0	0.029
1/ 2/85	4 60.0	0.028
1/ 2/85	5 10.0	0.028
1/ 2/85	5 20.0	0.028
1/ 2/85	5 30.0	0.028
1/ 2/85	5 40.0	0.023
1/ 2/85	5 50.0	0.023
1/ 2/85	5 60.0	0.023
1/ 2/85	6 10.0	0.023
1/ 2/85	6 20.0	0.023
1/ 2/85	6 30.0	0.023
1/ 2/85	6 40.0	0.013
1/ 2/85	6 50.0	0.013
1/ 2/85	6 60.0	0.013
1/ 2/85	7 10.0	0.002
1/ 2/85	7 20.0	0.001
1/ 2/85	7 30.0	0.001
1/ 2/85	7 40.0	0.000
1/ 2/85	7 50.0	0.000

1/ 2/85	7	60.0	0.000
1/ 2/85	8	10.0	0.000
1/ 2/85	8	20.0	0.000
1/ 2/85	8	30.0	0.000
1/ 2/85	8	40.0	0.000
1/ 2/85	8	50.0	0.000
1/ 2/85	8	60.0	0.000
1/ 2/85	9	10.0	0.000
1/ 2/85	9	20.0	0.000
1/ 2/85	9	30.0	0.000
1/ 2/85	9	40.0	0.000
1/ 2/85	9	50.0	0.000
1/ 2/85	9	60.0	0.000
1/ 2/85	10	10.0	0.000
1/ 2/85	10	20.0	0.000
1/ 2/85	10	30.0	0.000
1/ 2/85	10	40.0	0.000
1/ 2/85	10	50.0	0.000
1/ 2/85	10	60.0	0.000
1/ 2/85	11	10.0	0.000
1/ 2/85	11	20.0	0.000
1/ 2/85	11	30.0	0.000
1/ 2/85	11	40.0	0.000
1/ 2/85	11	50.0	0.000

1

MAIN SYSTEM M1

1 YR. DESIGN STORM

SUMMARY OF QUANTITY RESULTS (INFLOW IN CFS) AT LOCATION 101

DATE MO/DA/YR	TIME HR:MIN		FLOW CFS
1/ 2/85	11	60.0	0.000
1/ 2/85	12	10.0	0.000
1/ 2/85	12	20.0	0.000
1/ 2/85	12	30.0	0.000
1/ 2/85	12	40.0	0.000
1/ 2/85	12	50.0	0.000
1/ 2/85	12	60.0	0.000
1/ 2/85	13	10.0	0.000
1/ 2/85	13	20.0	0.000
1/ 2/85	13	30.0	0.000
1/ 2/85	13	40.0	0.000
1/ 2/85	13	50.0	0.000
1/ 2/85	13	60.0	0.000
1/ 2/85	14	10.0	0.000
1/ 2/85	14	20.0	0.000
1/ 2/85	14	30.0	0.000
1/ 2/85	14	40.0	0.000

```
  1/ 2/85  14 50.0     0.000
  1/ 2/85  14 60.0     0.000
  1/ 2/85  15 10.0     0.000
  1/ 2/85  15 20.0     0.000
  1/ 2/85  15 30.0     0.000
  1/ 2/85  15 40.0     0.000
  1/ 2/85  15 50.0     0.000
  1/ 2/85  15 60.0     0.000
  1/ 2/85  16 10.0     0.000
  1/ 2/85  16 20.0     0.000
  1/ 2/85  16 30.0     0.000
  1/ 2/85  16 40.0     0.000
  1/ 2/85  16 50.0     0.000
  1/ 2/85  16 60.0     0.000
  1/ 2/85  17 10.0     0.000
  1/ 2/85  17 20.0     0.000
  1/ 2/85  17 30.0     0.000
  1/ 2/85  17 40.0     0.000
  1/ 2/85  17 50.0     0.000
  1/ 2/85  17 60.0     0.000
  1/ 2/85  18 10.0     0.000
  1/ 2/85  18 20.0     0.000
  1/ 2/85  18 30.0     0.000
  1/ 2/85  18 40.0     0.000
  1/ 2/85  18 50.0     0.000
  1/ 2/85  18 60.0     0.000
  1/ 2/85  19 10.0     0.000
  1/ 2/85  19 20.0     0.000
  1/ 2/85  19 30.0     0.000
  1/ 2/85  19 40.0     0.000
  1/ 2/85  19 50.0     0.000
  1/ 2/85  19 60.0     0.000

 FLOW WT'D MEANS
+                 0.026

 FLOW WT'D STD-DEVS
+                 0.633

 TOTAL LOADS
+               2347.756
                 CUB-FT
1
   MAIN SYSTEM M1

                    1 YR. DESIGN STORM


   SUMMARY OF QUANTITY RESULTS ( INFLOW IN CFS) AT LOCATION    99


   DATE     TIME       FLOW
```

MO/DA/YR	HR:MIN	CFS
1/ 1/85	19 10.0	0.002
1/ 1/85	19 20.0	0.002
1/ 1/85	19 30.0	0.002
1/ 1/85	19 40.0	0.004
1/ 1/85	19 50.0	0.003
1/ 1/85	19 60.0	0.012
1/ 1/85	20 10.0	0.014
1/ 1/85	20 20.0	0.014
1/ 1/85	20 30.0	0.014
1/ 1/85	20 40.0	0.018
1/ 1/85	20 50.0	0.017
1/ 1/85	20 60.0	0.017
1/ 1/85	21 10.0	0.017
1/ 1/85	21 20.0	0.017
1/ 1/85	21 30.0	0.017
1/ 1/85	21 40.0	0.025
1/ 1/85	21 50.0	0.023
1/ 1/85	21 60.0	0.023
1/ 1/85	22 10.0	0.023
1/ 1/85	22 20.0	0.023
1/ 1/85	22 30.0	0.023
1/ 1/85	22 40.0	0.034
1/ 1/85	22 50.0	0.030
1/ 1/85	22 60.0	0.031
1/ 1/85	23 10.0	0.031
1/ 1/85	23 20.0	0.031
1/ 1/85	23 30.0	0.031
1/ 1/85	23 40.0	0.058
1/ 1/85	23 50.0	0.047
1/ 1/85	23 60.0	0.051
1/ 2/85	0 10.0	0.049
1/ 2/85	0 20.0	0.050
1/ 2/85	0 30.0	0.050
1/ 2/85	0 40.0	0.161
1/ 2/85	0 50.0	0.097
1/ 2/85	0 60.0	0.129
1/ 2/85	1 10.0	0.112
1/ 2/85	1 20.0	0.121
1/ 2/85	1 30.0	0.116
1/ 2/85	1 40.0	0.029
1/ 2/85	1 50.0	0.058
1/ 2/85	1 60.0	0.046
1/ 2/85	2 10.0	0.051
1/ 2/85	2 20.0	0.049
1/ 2/85	2 30.0	0.050
1/ 2/85	2 40.0	0.026
1/ 2/85	2 50.0	0.033
1/ 2/85	2 60.0	0.031
1/ 2/85	3 10.0	0.031
1/ 2/85	3 20.0	0.031
1/ 2/85	3 30.0	0.031

1

MAIN SYSTEM M1

1 YR. DESIGN STORM

SUMMARY OF QUANTITY RESULTS (INFLOW IN CFS) AT LOCATION 99

DATE MO/DA/YR	TIME HR:MIN	FLOW CFS
1/ 2/85	3 40.0	0.021
1/ 2/85	3 50.0	0.024
1/ 2/85	3 60.0	0.023
1/ 2/85	4 10.0	0.023
1/ 2/85	4 20.0	0.023
1/ 2/85	4 30.0	0.023
1/ 2/85	4 40.0	0.016
1/ 2/85	4 50.0	0.017
1/ 2/85	4 60.0	0.017
1/ 2/85	5 10.0	0.017
1/ 2/85	5 20.0	0.017
1/ 2/85	5 30.0	0.017
1/ 2/85	5 40.0	0.014
1/ 2/85	5 50.0	0.014
1/ 2/85	5 60.0	0.014
1/ 2/85	6 10.0	0.014
1/ 2/85	6 20.0	0.014
1/ 2/85	6 30.0	0.014
1/ 2/85	6 40.0	0.007
1/ 2/85	6 50.0	0.008
1/ 2/85	6 60.0	0.008
1/ 2/85	7 10.0	0.001
1/ 2/85	7 20.0	0.001
1/ 2/85	7 30.0	0.000
1/ 2/85	7 40.0	0.000
1/ 2/85	7 50.0	0.000
1/ 2/85	7 60.0	0.000
1/ 2/85	8 10.0	0.000
1/ 2/85	8 20.0	0.000
1/ 2/85	8 30.0	0.000
1/ 2/85	8 40.0	0.000
1/ 2/85	8 50.0	0.000
1/ 2/85	8 60.0	0.000
1/ 2/85	9 10.0	0.000
1/ 2/85	9 20.0	0.000
1/ 2/85	9 30.0	0.000
1/ 2/85	9 40.0	0.000
1/ 2/85	9 50.0	0.000
1/ 2/85	9 60.0	0.000
1/ 2/85	10 10.0	0.000
1/ 2/85	10 20.0	0.000

1/ 2/85	10 30.0	0.000
1/ 2/85	10 40.0	0.000
1/ 2/85	10 50.0	0.000
1/ 2/85	10 60.0	0.000
1/ 2/85	11 10.0	0.000
1/ 2/85	11 20.0	0.000
1/ 2/85	11 30.0	0.000
1/ 2/85	11 40.0	0.000
1/ 2/85	11 50.0	0.000

1

MAIN SYSTEM M1

1 YR. DESIGN STORM

SUMMARY OF QUANTITY RESULTS (INFLOW IN CFS) AT LOCATION 99

DATE MO/DA/YR	TIME HR:MIN	FLOW CFS
1/ 2/85	11 60.0	0.000
1/ 2/85	12 10.0	0.000
1/ 2/85	12 20.0	0.000
1/ 2/85	12 30.0	0.000
1/ 2/85	12 40.0	0.000
1/ 2/85	12 50.0	0.000
1/ 2/85	12 60.0	0.000
1/ 2/85	13 10.0	0.000
1/ 2/85	13 20.0	0.000
1/ 2/85	13 30.0	0.000
1/ 2/85	13 40.0	0.000
1/ 2/85	13 50.0	0.000
1/ 2/85	13 60.0	0.000
1/ 2/85	14 10.0	0.000
1/ 2/85	14 20.0	0.000
1/ 2/85	14 30.0	0.000
1/ 2/85	14 40.0	0.000
1/ 2/85	14 50.0	0.000
1/ 2/85	14 60.0	0.000
1/ 2/85	15 10.0	0.000
1/ 2/85	15 20.0	0.000
1/ 2/85	15 30.0	0.000
1/ 2/85	15 40.0	0.000
1/ 2/85	15 50.0	0.000
1/ 2/85	15 60.0	0.000
1/ 2/85	16 10.0	0.000
1/ 2/85	16 20.0	0.000
1/ 2/85	16 30.0	0.000
1/ 2/85	16 40.0	0.000
1/ 2/85	16 50.0	0.000
1/ 2/85	16 60.0	0.000
1/ 2/85	17 10.0	0.000

1/ 2/85	17	20.0	0.000
1/ 2/85	17	30.0	0.000
1/ 2/85	17	40.0	0.000
1/ 2/85	17	50.0	0.000
1/ 2/85	17	60.0	0.000
1/ 2/85	18	10.0	0.000
1/ 2/85	18	20.0	0.000
1/ 2/85	18	30.0	0.000
1/ 2/85	18	40.0	0.000
1/ 2/85	18	50.0	0.000
1/ 2/85	18	60.0	0.000
1/ 2/85	19	10.0	0.000
1/ 2/85	19	20.0	0.000
1/ 2/85	19	30.0	0.000
1/ 2/85	19	40.0	0.000
1/ 2/85	19	50.0	0.000
1/ 2/85	19	60.0	0.000

FLOW WT'D MEANS
+ 0.016

FLOW WT'D STD-DEVS
+ 0.382

TOTAL LOADS
+ 1413.516
CUB-FT
1
MAIN SYSTEM M1

1 YR. DESIGN STORM

SUMMARY OF QUANTITY RESULTS (INFLOW IN CFS) AT LOCATION 97

DATE MO/DA/YR	TIME HR:MIN	FLOW CFS
1/ 1/85	19 10.0	0.006
1/ 1/85	19 20.0	0.008
1/ 1/85	19 30.0	0.009
1/ 1/85	19 40.0	0.016
1/ 1/85	19 50.0	0.015
1/ 1/85	19 60.0	0.044
1/ 1/85	20 10.0	0.062
1/ 1/85	20 20.0	0.061
1/ 1/85	20 30.0	0.061
1/ 1/85	20 40.0	0.076
1/ 1/85	20 50.0	0.075
1/ 1/85	20 60.0	0.075
1/ 1/85	21 10.0	0.075
1/ 1/85	21 20.0	0.075

1/ 1/85	21 30.0	0.075
1/ 1/85	21 40.0	0.107
1/ 1/85	21 50.0	0.101
1/ 1/85	21 60.0	0.102
1/ 1/85	22 10.0	0.102
1/ 1/85	22 20.0	0.102
1/ 1/85	22 30.0	0.102
1/ 1/85	22 40.0	0.144
1/ 1/85	22 50.0	0.134
1/ 1/85	22 60.0	0.137
1/ 1/85	23 10.0	0.136
1/ 1/85	23 20.0	0.136
1/ 1/85	23 30.0	0.136
1/ 1/85	23 40.0	0.246
1/ 1/85	23 50.0	0.209
1/ 1/85	23 60.0	0.221
1/ 2/85	0 10.0	0.217
1/ 2/85	0 20.0	0.218
1/ 2/85	0 30.0	0.218
1/ 2/85	0 40.0	0.685
1/ 2/85	0 50.0	0.444
1/ 2/85	0 60.0	0.553
1/ 2/85	1 10.0	0.501
1/ 2/85	1 20.0	0.525
1/ 2/85	1 30.0	0.514
1/ 2/85	1 40.0	0.138
1/ 2/85	1 50.0	0.245
1/ 2/85	1 60.0	0.209
1/ 2/85	2 10.0	0.221
1/ 2/85	2 20.0	0.217
1/ 2/85	2 30.0	0.218
1/ 2/85	2 40.0	0.118
1/ 2/85	2 50.0	0.141
1/ 2/85	2 60.0	0.135
1/ 2/85	3 10.0	0.136
1/ 2/85	3 20.0	0.136
1/ 2/85	3 30.0	0.136

1

MAIN SYSTEM M1

1 YR. DESIGN STORM

SUMMARY OF QUANTITY RESULTS (INFLOW IN CFS) AT LOCATION 97

DATE MO/DA/YR	TIME HR:MIN	FLOW CFS
1/ 2/85	3 40.0	0.096
1/ 2/85	3 50.0	0.103
1/ 2/85	3 60.0	0.102
1/ 2/85	4 10.0	0.102

1/ 2/85	4	20.0	0.102
1/ 2/85	4	30.0	0.102
1/ 2/85	4	40.0	0.071
1/ 2/85	4	50.0	0.075
1/ 2/85	4	60.0	0.075
1/ 2/85	5	10.0	0.075
1/ 2/85	5	20.0	0.075
1/ 2/85	5	30.0	0.075
1/ 2/85	5	40.0	0.060
1/ 2/85	5	50.0	0.061
1/ 2/85	5	60.0	0.061
1/ 2/85	6	10.0	0.061
1/ 2/85	6	20.0	0.061
1/ 2/85	6	30.0	0.061
1/ 2/85	6	40.0	0.034
1/ 2/85	6	50.0	0.034
1/ 2/85	6	60.0	0.034
1/ 2/85	7	10.0	0.007
1/ 2/85	7	20.0	0.003
1/ 2/85	7	30.0	0.002
1/ 2/85	7	40.0	0.001
1/ 2/85	7	50.0	0.001
1/ 2/85	7	60.0	0.000
1/ 2/85	8	10.0	0.000
1/ 2/85	8	20.0	0.000
1/ 2/85	8	30.0	0.000
1/ 2/85	8	40.0	0.000
1/ 2/85	8	50.0	0.000
1/ 2/85	8	60.0	0.000
1/ 2/85	9	10.0	0.000
1/ 2/85	9	20.0	0.000
1/ 2/85	9	30.0	0.000
1/ 2/85	9	40.0	0.000
1/ 2/85	9	50.0	0.000
1/ 2/85	9	60.0	0.000
1/ 2/85	10	10.0	0.000
1/ 2/85	10	20.0	0.000
1/ 2/85	10	30.0	0.000
1/ 2/85	10	40.0	0.000
1/ 2/85	10	50.0	0.000
1/ 2/85	10	60.0	0.000
1/ 2/85	11	10.0	0.000
1/ 2/85	11	20.0	0.000
1/ 2/85	11	30.0	0.000
1/ 2/85	11	40.0	0.000
1/ 2/85	11	50.0	0.000

1

MAIN SYSTEM M1

1 YR. DESIGN STORM

SUMMARY OF QUANTITY RESULTS (INFLOW IN CFS) AT LOCATION 97

DATE MO/DA/YR	TIME HR:MIN	FLOW CFS
1/ 2/85	11 60.0	0.000
1/ 2/85	12 10.0	0.000
1/ 2/85	12 20.0	0.000
1/ 2/85	12 30.0	0.000
1/ 2/85	12 40.0	0.000
1/ 2/85	12 50.0	0.000
1/ 2/85	12 60.0	0.000
1/ 2/85	13 10.0	0.000
1/ 2/85	13 20.0	0.000
1/ 2/85	13 30.0	0.000
1/ 2/85	13 40.0	0.000
1/ 2/85	13 50.0	0.000
1/ 2/85	13 60.0	0.000
1/ 2/85	14 10.0	0.000
1/ 2/85	14 20.0	0.000
1/ 2/85	14 30.0	0.000
1/ 2/85	14 40.0	0.000
1/ 2/85	14 50.0	0.000
1/ 2/85	14 60.0	0.000
1/ 2/85	15 10.0	0.000
1/ 2/85	15 20.0	0.000
1/ 2/85	15 30.0	0.000
1/ 2/85	15 40.0	0.000
1/ 2/85	15 50.0	0.000
1/ 2/85	15 60.0	0.000
1/ 2/85	16 10.0	0.000
1/ 2/85	16 20.0	0.000
1/ 2/85	16 30.0	0.000
1/ 2/85	16 40.0	0.000
1/ 2/85	16 50.0	0.000
1/ 2/85	16 60.0	0.000
1/ 2/85	17 10.0	0.000
1/ 2/85	17 20.0	0.000
1/ 2/85	17 30.0	0.000
1/ 2/85	17 40.0	0.000
1/ 2/85	17 50.0	0.000
1/ 2/85	17 60.0	0.000
1/ 2/85	18 10.0	0.000
1/ 2/85	18 20.0	0.000
1/ 2/85	18 30.0	0.000
1/ 2/85	18 40.0	0.000
1/ 2/85	18 50.0	0.000
1/ 2/85	18 60.0	0.000
1/ 2/85	19 10.0	0.000
1/ 2/85	19 20.0	0.000
1/ 2/85	19 30.0	0.000
1/ 2/85	19 40.0	0.000

1/ 2/85	19 50.0	0.000
1/ 2/85	19 60.0	0.000

FLOW WT'D MEANS
+ 0.069

FLOW WT'D STD-DEVS
+ 1.665

TOTAL LOADS
+ 6187.214
CUB-FT
1
MAIN SYSTEM M1

1 YR. DESIGN STORM

SUMMARY OF QUANTITY RESULTS (INFLOW IN CFS) AT LOCATION 95

DATE MO/DA/YR	TIME HR:MIN	FLOW CFS
1/ 1/85	19 10.0	0.006
1/ 1/85	19 20.0	0.005
1/ 1/85	19 30.0	0.005
1/ 1/85	19 40.0	0.011
1/ 1/85	19 50.0	0.010
1/ 1/85	19 60.0	0.040
1/ 1/85	20 10.0	0.039
1/ 1/85	20 20.0	0.040
1/ 1/85	20 30.0	0.039
1/ 1/85	20 40.0	0.051
1/ 1/85	20 50.0	0.048
1/ 1/85	20 60.0	0.048
1/ 1/85	21 10.0	0.048
1/ 1/85	21 20.0	0.048
1/ 1/85	21 30.0	0.048
1/ 1/85	21 40.0	0.072
1/ 1/85	21 50.0	0.064
1/ 1/85	21 60.0	0.066
1/ 1/85	22 10.0	0.066
1/ 1/85	22 20.0	0.066
1/ 1/85	22 30.0	0.066
1/ 1/85	22 40.0	0.096
1/ 1/85	22 50.0	0.085
1/ 1/85	22 60.0	0.089
1/ 1/85	23 10.0	0.087
1/ 1/85	23 20.0	0.088
1/ 1/85	23 30.0	0.088
1/ 1/85	23 40.0	0.167
1/ 1/85	23 50.0	0.129

1/ 1/85	23 60.0	0.146
1/ 2/85	0 10.0	0.138
1/ 2/85	0 20.0	0.141
1/ 2/85	0 30.0	0.140
1/ 2/85	0 40.0	0.472
1/ 2/85	0 50.0	0.262
1/ 2/85	0 60.0	0.378
1/ 2/85	1 10.0	0.309
1/ 2/85	1 20.0	0.348
1/ 2/85	1 30.0	0.325
1/ 2/85	1 40.0	0.075
1/ 2/85	1 50.0	0.174
1/ 2/85	1 60.0	0.126
1/ 2/85	2 10.0	0.147
1/ 2/85	2 20.0	0.137
1/ 2/85	2 30.0	0.142
1/ 2/85	2 40.0	0.070
1/ 2/85	2 50.0	0.095
1/ 2/85	2 60.0	0.085
1/ 2/85	3 10.0	0.089
1/ 2/85	3 20.0	0.087
1/ 2/85	3 30.0	0.088

1

MAIN SYSTEM M1

1 YR. DESIGN STORM

SUMMARY OF QUANTITY RESULTS (INFLOW IN CFS) AT LOCATION 95

DATE MO/DA/YR	TIME HR:MIN	FLOW CFS
1/ 2/85	3 40.0	0.059
1/ 2/85	3 50.0	0.068
1/ 2/85	3 60.0	0.065
1/ 2/85	4 10.0	0.066
1/ 2/85	4 20.0	0.066
1/ 2/85	4 30.0	0.066
1/ 2/85	4 40.0	0.044
1/ 2/85	4 50.0	0.049
1/ 2/85	4 60.0	0.048
1/ 2/85	5 10.0	0.048
1/ 2/85	5 20.0	0.048
1/ 2/85	5 30.0	0.048
1/ 2/85	5 40.0	0.037
1/ 2/85	5 50.0	0.040
1/ 2/85	5 60.0	0.039
1/ 2/85	6 10.0	0.040
1/ 2/85	6 20.0	0.039
1/ 2/85	6 30.0	0.039
1/ 2/85	6 40.0	0.020

1/ 2/85	6	50.0	0.022
1/ 2/85	6	60.0	0.022
1/ 2/85	7	10.0	0.003
1/ 2/85	7	20.0	0.001
1/ 2/85	7	30.0	0.001
1/ 2/85	7	40.0	0.000
1/ 2/85	7	50.0	0.000
1/ 2/85	7	60.0	0.000
1/ 2/85	8	10.0	0.000
1/ 2/85	8	20.0	0.000
1/ 2/85	8	30.0	0.000
1/ 2/85	8	40.0	0.000
1/ 2/85	8	50.0	0.000
1/ 2/85	8	60.0	0.000
1/ 2/85	9	10.0	0.000
1/ 2/85	9	20.0	0.000
1/ 2/85	9	30.0	0.000
1/ 2/85	9	40.0	0.000
1/ 2/85	9	50.0	0.000
1/ 2/85	9	60.0	0.000
1/ 2/85	10	10.0	0.000
1/ 2/85	10	20.0	0.000
1/ 2/85	10	30.0	0.000
1/ 2/85	10	40.0	0.000
1/ 2/85	10	50.0	0.000
1/ 2/85	10	60.0	0.000
1/ 2/85	11	10.0	0.000
1/ 2/85	11	20.0	0.000
1/ 2/85	11	30.0	0.000
1/ 2/85	11	40.0	0.000
1/ 2/85	11	50.0	0.000

1

MAIN SYSTEM M1

1 YR. DESIGN STORM

SUMMARY OF QUANTITY RESULTS (INFLOW IN CFS) AT LOCATION 95

DATE MO/DA/YR	TIME HR:MIN		FLOW CFS
1/ 2/85	11	60.0	0.000
1/ 2/85	12	10.0	0.000
1/ 2/85	12	20.0	0.000
1/ 2/85	12	30.0	0.000
1/ 2/85	12	40.0	0.000
1/ 2/85	12	50.0	0.000
1/ 2/85	12	60.0	0.000
1/ 2/85	13	10.0	0.000
1/ 2/85	13	20.0	0.000
1/ 2/85	13	30.0	0.000

```
  1/ 2/85  13 40.0     0.000
  1/ 2/85  13 50.0     0.000
  1/ 2/85  13 60.0     0.000
  1/ 2/85  14 10.0     0.000
  1/ 2/85  14 20.0     0.000
  1/ 2/85  14 30.0     0.000
  1/ 2/85  14 40.0     0.000
  1/ 2/85  14 50.0     0.000
  1/ 2/85  14 60.0     0.000
  1/ 2/85  15 10.0     0.000
  1/ 2/85  15 20.0     0.000
  1/ 2/85  15 30.0     0.000
  1/ 2/85  15 40.0     0.000
  1/ 2/85  15 50.0     0.000
  1/ 2/85  15 60.0     0.000
  1/ 2/85  16 10.0     0.000
  1/ 2/85  16 20.0     0.000
  1/ 2/85  16 30.0     0.000
  1/ 2/85  16 40.0     0.000
  1/ 2/85  16 50.0     0.000
  1/ 2/85  16 60.0     0.000
  1/ 2/85  17 10.0     0.000
  1/ 2/85  17 20.0     0.000
  1/ 2/85  17 30.0     0.000
  1/ 2/85  17 40.0     0.000
  1/ 2/85  17 50.0     0.000
  1/ 2/85  17 60.0     0.000
  1/ 2/85  18 10.0     0.000
  1/ 2/85  18 20.0     0.000
  1/ 2/85  18 30.0     0.000
  1/ 2/85  18 40.0     0.000
  1/ 2/85  18 50.0     0.000
  1/ 2/85  18 60.0     0.000
  1/ 2/85  19 10.0     0.000
  1/ 2/85  19 20.0     0.000
  1/ 2/85  19 30.0     0.000
  1/ 2/85  19 40.0     0.000
  1/ 2/85  19 50.0     0.000
  1/ 2/85  19 60.0     0.000

 FLOW WT'D MEANS
+                 0.044

 FLOW WT'D STD-DEVS
+                 1.086

 TOTAL LOADS
+               4000.274
                 CUB-FT
1
   MAIN SYSTEM M1
```

1 YR. DESIGN STORM

SUMMARY OF QUANTITY RESULTS (INFLOW IN CFS) AT LOCATION 93

DATE MO/DA/YR	TIME HR:MIN	FLOW CFS
1/ 1/85	19 10.0	0.004
1/ 1/85	19 20.0	0.004
1/ 1/85	19 30.0	0.004
1/ 1/85	19 40.0	0.008
1/ 1/85	19 50.0	0.007
1/ 1/85	19 60.0	0.029
1/ 1/85	20 10.0	0.030
1/ 1/85	20 20.0	0.029
1/ 1/85	20 30.0	0.029
1/ 1/85	20 40.0	0.038
1/ 1/85	20 50.0	0.035
1/ 1/85	20 60.0	0.036
1/ 1/85	21 10.0	0.036
1/ 1/85	21 20.0	0.036
1/ 1/85	21 30.0	0.036
1/ 1/85	21 40.0	0.053
1/ 1/85	21 50.0	0.048
1/ 1/85	21 60.0	0.049
1/ 1/85	22 10.0	0.049
1/ 1/85	22 20.0	0.049
1/ 1/85	22 30.0	0.049
1/ 1/85	22 40.0	0.072
1/ 1/85	22 50.0	0.063
1/ 1/85	22 60.0	0.066
1/ 1/85	23 10.0	0.065
1/ 1/85	23 20.0	0.065
1/ 1/85	23 30.0	0.065
1/ 1/85	23 40.0	0.124
1/ 1/85	23 50.0	0.096
1/ 1/85	23 60.0	0.108
1/ 2/85	0 10.0	0.103
1/ 2/85	0 20.0	0.105
1/ 2/85	0 30.0	0.104
1/ 2/85	0 40.0	0.350
1/ 2/85	0 50.0	0.196
1/ 2/85	0 60.0	0.280
1/ 2/85	1 10.0	0.231
1/ 2/85	1 20.0	0.258
1/ 2/85	1 30.0	0.243
1/ 2/85	1 40.0	0.057
1/ 2/85	1 50.0	0.129
1/ 2/85	1 60.0	0.094
1/ 2/85	2 10.0	0.109
1/ 2/85	2 20.0	0.103

1/ 2/85	2 30.0	0.105
1/ 2/85	2 40.0	0.052
1/ 2/85	2 50.0	0.070
1/ 2/85	2 60.0	0.064
1/ 2/85	3 10.0	0.066
1/ 2/85	3 20.0	0.065
1/ 2/85	3 30.0	0.065

1

MAIN SYSTEM M1

1 YR. DESIGN STORM

SUMMARY OF QUANTITY RESULTS (INFLOW IN CFS) AT LOCATION 93

DATE MO/DA/YR	TIME HR:MIN	FLOW CFS
1/ 2/85	3 40.0	0.044
1/ 2/85	3 50.0	0.051
1/ 2/85	3 60.0	0.049
1/ 2/85	4 10.0	0.049
1/ 2/85	4 20.0	0.049
1/ 2/85	4 30.0	0.049
1/ 2/85	4 40.0	0.033
1/ 2/85	4 50.0	0.037
1/ 2/85	4 60.0	0.036
1/ 2/85	5 10.0	0.036
1/ 2/85	5 20.0	0.036
1/ 2/85	5 30.0	0.036
1/ 2/85	5 40.0	0.028
1/ 2/85	5 50.0	0.030
1/ 2/85	5 60.0	0.029
1/ 2/85	6 10.0	0.029
1/ 2/85	6 20.0	0.029
1/ 2/85	6 30.0	0.029
1/ 2/85	6 40.0	0.015
1/ 2/85	6 50.0	0.016
1/ 2/85	6 60.0	0.016
1/ 2/85	7 10.0	0.002
1/ 2/85	7 20.0	0.001
1/ 2/85	7 30.0	0.000
1/ 2/85	7 40.0	0.000
1/ 2/85	7 50.0	0.000
1/ 2/85	7 60.0	0.000
1/ 2/85	8 10.0	0.000
1/ 2/85	8 20.0	0.000
1/ 2/85	8 30.0	0.000
1/ 2/85	8 40.0	0.000
1/ 2/85	8 50.0	0.000
1/ 2/85	8 60.0	0.000
1/ 2/85	9 10.0	0.000

1/ 2/85	9 20.0	0.000
1/ 2/85	9 30.0	0.000
1/ 2/85	9 40.0	0.000
1/ 2/85	9 50.0	0.000
1/ 2/85	9 60.0	0.000
1/ 2/85	10 10.0	0.000
1/ 2/85	10 20.0	0.000
1/ 2/85	10 30.0	0.000
1/ 2/85	10 40.0	0.000
1/ 2/85	10 50.0	0.000
1/ 2/85	10 60.0	0.000
1/ 2/85	11 10.0	0.000
1/ 2/85	11 20.0	0.000
1/ 2/85	11 30.0	0.000
1/ 2/85	11 40.0	0.000
1/ 2/85	11 50.0	0.000

1

MAIN SYSTEM M1

1 YR. DESIGN STORM

SUMMARY OF QUANTITY RESULTS (INFLOW IN CFS) AT LOCATION 93

DATE MO/DA/YR	TIME HR:MIN	FLOW CFS
1/ 2/85	11 60.0	0.000
1/ 2/85	12 10.0	0.000
1/ 2/85	12 20.0	0.000
1/ 2/85	12 30.0	0.000
1/ 2/85	12 40.0	0.000
1/ 2/85	12 50.0	0.000
1/ 2/85	12 60.0	0.000
1/ 2/85	13 10.0	0.000
1/ 2/85	13 20.0	0.000
1/ 2/85	13 30.0	0.000
1/ 2/85	13 40.0	0.000
1/ 2/85	13 50.0	0.000
1/ 2/85	13 60.0	0.000
1/ 2/85	14 10.0	0.000
1/ 2/85	14 20.0	0.000
1/ 2/85	14 30.0	0.000
1/ 2/85	14 40.0	0.000
1/ 2/85	14 50.0	0.000
1/ 2/85	14 60.0	0.000
1/ 2/85	15 10.0	0.000
1/ 2/85	15 20.0	0.000
1/ 2/85	15 30.0	0.000
1/ 2/85	15 40.0	0.000
1/ 2/85	15 50.0	0.000
1/ 2/85	15 60.0	0.000

1/ 2/85	16	10.0	0.000
1/ 2/85	16	20.0	0.000
1/ 2/85	16	30.0	0.000
1/ 2/85	16	40.0	0.000
1/ 2/85	16	50.0	0.000
1/ 2/85	16	60.0	0.000
1/ 2/85	17	10.0	0.000
1/ 2/85	17	20.0	0.000
1/ 2/85	17	30.0	0.000
1/ 2/85	17	40.0	0.000
1/ 2/85	17	50.0	0.000
1/ 2/85	17	60.0	0.000
1/ 2/85	18	10.0	0.000
1/ 2/85	18	20.0	0.000
1/ 2/85	18	30.0	0.000
1/ 2/85	18	40.0	0.000
1/ 2/85	18	50.0	0.000
1/ 2/85	18	60.0	0.000
1/ 2/85	19	10.0	0.000
1/ 2/85	19	20.0	0.000
1/ 2/85	19	30.0	0.000
1/ 2/85	19	40.0	0.000
1/ 2/85	19	50.0	0.000
1/ 2/85	19	60.0	0.000

FLOW WT'D MEANS
+ 0.033

FLOW WT'D STD-DEVS
+ 0.808

TOTAL LOADS
+ 2978.648
CUB-FT
1
MAIN SYSTEM M1

1 YR. DESIGN STORM

SUMMARY OF QUANTITY RESULTS (INFLOW IN CFS) AT LOCATION 89

DATE MO/DA/YR	TIME HR:MIN	FLOW CFS
1/ 1/85	19 10.0	0.002
1/ 1/85	19 20.0	0.004
1/ 1/85	19 30.0	0.005
1/ 1/85	19 40.0	0.008
1/ 1/85	19 50.0	0.009
1/ 1/85	19 60.0	0.017
1/ 1/85	20 10.0	0.033

```
 1/ 1/85  20 20.0     0.036
 1/ 1/85  20 30.0     0.037
 1/ 1/85  20 40.0     0.044
 1/ 1/85  20 50.0     0.045
 1/ 1/85  20 60.0     0.045
 1/ 1/85  21 10.0     0.045
 1/ 1/85  21 20.0     0.045
 1/ 1/85  21 30.0     0.045
 1/ 1/85  21 40.0     0.061
 1/ 1/85  21 50.0     0.062
 1/ 1/85  21 60.0     0.062
 1/ 1/85  22 10.0     0.062
 1/ 1/85  22 20.0     0.062
 1/ 1/85  22 30.0     0.062
 1/ 1/85  22 40.0     0.082
 1/ 1/85  22 50.0     0.082
 1/ 1/85  22 60.0     0.082
 1/ 1/85  23 10.0     0.082
 1/ 1/85  23 20.0     0.082
 1/ 1/85  23 30.0     0.082
 1/ 1/85  23 40.0     0.137
 1/ 1/85  23 50.0     0.131
 1/ 1/85  23 60.0     0.132
 1/ 2/85   0 10.0     0.132
 1/ 2/85   0 20.0     0.132
 1/ 2/85   0 30.0     0.132
 1/ 2/85   0 40.0     0.368
 1/ 2/85   0 50.0     0.298
 1/ 2/85   0 60.0     0.317
 1/ 2/85   1 10.0     0.311
 1/ 2/85   1 20.0     0.313
 1/ 2/85   1 30.0     0.313
 1/ 2/85   1 40.0     0.109
 1/ 2/85   1 50.0     0.134
 1/ 2/85   1 60.0     0.131
 1/ 2/85   2 10.0     0.132
 1/ 2/85   2 20.0     0.132
 1/ 2/85   2 30.0     0.132
 1/ 2/85   2 40.0     0.080
 1/ 2/85   2 50.0     0.082
 1/ 2/85   2 60.0     0.082
 1/ 2/85   3 10.0     0.082
 1/ 2/85   3 20.0     0.082
 1/ 2/85   3 30.0     0.082
1
 MAIN SYSTEM M1

                    1 YR. DESIGN STORM


 SUMMARY OF QUANTITY RESULTS ( INFLOW IN CFS) AT LOCATION    89
```

DATE MO/DA/YR	TIME HR:MIN	FLOW CFS
1/ 2/85	3 40.0	0.062
1/ 2/85	3 50.0	0.062
1/ 2/85	3 60.0	0.062
1/ 2/85	4 10.0	0.062
1/ 2/85	4 20.0	0.062
1/ 2/85	4 30.0	0.062
1/ 2/85	4 40.0	0.047
1/ 2/85	4 50.0	0.045
1/ 2/85	4 60.0	0.045
1/ 2/85	5 10.0	0.045
1/ 2/85	5 20.0	0.045
1/ 2/85	5 30.0	0.045
1/ 2/85	5 40.0	0.038
1/ 2/85	5 50.0	0.037
1/ 2/85	5 60.0	0.037
1/ 2/85	6 10.0	0.037
1/ 2/85	6 20.0	0.037
1/ 2/85	6 30.0	0.037
1/ 2/85	6 40.0	0.024
1/ 2/85	6 50.0	0.021
1/ 2/85	6 60.0	0.021
1/ 2/85	7 10.0	0.007
1/ 2/85	7 20.0	0.004
1/ 2/85	7 30.0	0.002
1/ 2/85	7 40.0	0.001
1/ 2/85	7 50.0	0.001
1/ 2/85	7 60.0	0.001
1/ 2/85	8 10.0	0.001
1/ 2/85	8 20.0	0.000
1/ 2/85	8 30.0	0.000
1/ 2/85	8 40.0	0.000
1/ 2/85	8 50.0	0.000
1/ 2/85	8 60.0	0.000
1/ 2/85	9 10.0	0.000
1/ 2/85	9 20.0	0.000
1/ 2/85	9 30.0	0.000
1/ 2/85	9 40.0	0.000
1/ 2/85	9 50.0	0.000
1/ 2/85	9 60.0	0.000
1/ 2/85	10 10.0	0.000
1/ 2/85	10 20.0	0.000
1/ 2/85	10 30.0	0.000
1/ 2/85	10 40.0	0.000
1/ 2/85	10 50.0	0.000
1/ 2/85	10 60.0	0.000
1/ 2/85	11 10.0	0.000
1/ 2/85	11 20.0	0.000
1/ 2/85	11 30.0	0.000
1/ 2/85	11 40.0	0.000

1/ 2/85 11 50.0 0.000
1
MAIN SYSTEM M1

1 YR. DESIGN STORM

SUMMARY OF QUANTITY RESULTS (INFLOW IN CFS) AT LOCATION 89

DATE MO/DA/YR	TIME HR:MIN	FLOW CFS
1/ 2/85	11 60.0	0.000
1/ 2/85	12 10.0	0.000
1/ 2/85	12 20.0	0.000
1/ 2/85	12 30.0	0.000
1/ 2/85	12 40.0	0.000
1/ 2/85	12 50.0	0.000
1/ 2/85	12 60.0	0.000
1/ 2/85	13 10.0	0.000
1/ 2/85	13 20.0	0.000
1/ 2/85	13 30.0	0.000
1/ 2/85	13 40.0	0.000
1/ 2/85	13 50.0	0.000
1/ 2/85	13 60.0	0.000
1/ 2/85	14 10.0	0.000
1/ 2/85	14 20.0	0.000
1/ 2/85	14 30.0	0.000
1/ 2/85	14 40.0	0.000
1/ 2/85	14 50.0	0.000
1/ 2/85	14 60.0	0.000
1/ 2/85	15 10.0	0.000
1/ 2/85	15 20.0	0.000
1/ 2/85	15 30.0	0.000
1/ 2/85	15 40.0	0.000
1/ 2/85	15 50.0	0.000
1/ 2/85	15 60.0	0.000
1/ 2/85	16 10.0	0.000
1/ 2/85	16 20.0	0.000
1/ 2/85	16 30.0	0.000
1/ 2/85	16 40.0	0.000
1/ 2/85	16 50.0	0.000
1/ 2/85	16 60.0	0.000
1/ 2/85	17 10.0	0.000
1/ 2/85	17 20.0	0.000
1/ 2/85	17 30.0	0.000
1/ 2/85	17 40.0	0.000
1/ 2/85	17 50.0	0.000
1/ 2/85	17 60.0	0.000
1/ 2/85	18 10.0	0.000
1/ 2/85	18 20.0	0.000
1/ 2/85	18 30.0	0.000

1/ 2/85	18 40.0	0.000
1/ 2/85	18 50.0	0.000
1/ 2/85	18 60.0	0.000
1/ 2/85	19 10.0	0.000
1/ 2/85	19 20.0	0.000
1/ 2/85	19 30.0	0.000
1/ 2/85	19 40.0	0.000
1/ 2/85	19 50.0	0.000
1/ 2/85	19 60.0	0.000

FLOW WT'D MEANS
+ 0.041

FLOW WT'D STD-DEVS
+ 0.993

TOTAL LOADS
+ 3727.990
CUB-FT
1
MAIN SYSTEM M1

1 YR. DESIGN STORM

SUMMARY OF QUANTITY RESULTS (INFLOW IN CFS) AT LOCATION 91

DATE MO/DA/YR	TIME HR:MIN	FLOW CFS
1/ 1/85	19 10.0	0.004
1/ 1/85	19 20.0	0.005
1/ 1/85	19 30.0	0.005
1/ 1/85	19 40.0	0.009
1/ 1/85	19 50.0	0.009
1/ 1/85	19 60.0	0.028
1/ 1/85	20 10.0	0.036
1/ 1/85	20 20.0	0.035
1/ 1/85	20 30.0	0.035
1/ 1/85	20 40.0	0.044
1/ 1/85	20 50.0	0.042
1/ 1/85	20 60.0	0.043
1/ 1/85	21 10.0	0.043
1/ 1/85	21 20.0	0.043
1/ 1/85	21 30.0	0.043
1/ 1/85	21 40.0	0.062
1/ 1/85	21 50.0	0.057
1/ 1/85	21 60.0	0.058
1/ 1/85	22 10.0	0.058
1/ 1/85	22 20.0	0.058
1/ 1/85	22 30.0	0.058
1/ 1/85	22 40.0	0.083

1/ 1/85	22 50.0	0.076
1/ 1/85	22 60.0	0.078
1/ 1/85	23 10.0	0.078
1/ 1/85	23 20.0	0.078
1/ 1/85	23 30.0	0.078
1/ 1/85	23 40.0	0.143
1/ 1/85	23 50.0	0.118
1/ 1/85	23 60.0	0.127
1/ 2/85	0 10.0	0.123
1/ 2/85	0 20.0	0.125
1/ 2/85	0 30.0	0.124
1/ 2/85	0 40.0	0.400
1/ 2/85	0 50.0	0.246
1/ 2/85	0 60.0	0.321
1/ 2/85	1 10.0	0.282
1/ 2/85	1 20.0	0.302
1/ 2/85	1 30.0	0.292
1/ 2/85	1 40.0	0.075
1/ 2/85	1 50.0	0.144
1/ 2/85	1 60.0	0.117
1/ 2/85	2 10.0	0.127
1/ 2/85	2 20.0	0.123
1/ 2/85	2 30.0	0.125
1/ 2/85	2 40.0	0.065
1/ 2/85	2 50.0	0.081
1/ 2/85	2 60.0	0.077
1/ 2/85	3 10.0	0.078
1/ 2/85	3 20.0	0.078
1/ 2/85	3 30.0	0.078

1

MAIN SYSTEM M1

1 YR. DESIGN STORM

SUMMARY OF QUANTITY RESULTS (INFLOW IN CFS) AT LOCATION 91

DATE MO/DA/YR	TIME HR:MIN	FLOW CFS
1/ 2/85	3 40.0	0.054
1/ 2/85	3 50.0	0.059
1/ 2/85	3 60.0	0.058
1/ 2/85	4 10.0	0.058
1/ 2/85	4 20.0	0.058
1/ 2/85	4 30.0	0.058
1/ 2/85	4 40.0	0.040
1/ 2/85	4 50.0	0.043
1/ 2/85	4 60.0	0.043
1/ 2/85	5 10.0	0.043
1/ 2/85	5 20.0	0.043
1/ 2/85	5 30.0	0.043

1/ 2/85	5	40.0	0.034
1/ 2/85	5	50.0	0.035
1/ 2/85	5	60.0	0.035
1/ 2/85	6	10.0	0.035
1/ 2/85	6	20.0	0.035
1/ 2/85	6	30.0	0.035
1/ 2/85	6	40.0	0.019
1/ 2/85	6	50.0	0.019
1/ 2/85	6	60.0	0.019
1/ 2/85	7	10.0	0.003
1/ 2/85	7	20.0	0.001
1/ 2/85	7	30.0	0.001
1/ 2/85	7	40.0	0.000
1/ 2/85	7	50.0	0.000
1/ 2/85	7	60.0	0.000
1/ 2/85	8	10.0	0.000
1/ 2/85	8	20.0	0.000
1/ 2/85	8	30.0	0.000
1/ 2/85	8	40.0	0.000
1/ 2/85	8	50.0	0.000
1/ 2/85	8	60.0	0.000
1/ 2/85	9	10.0	0.000
1/ 2/85	9	20.0	0.000
1/ 2/85	9	30.0	0.000
1/ 2/85	9	40.0	0.000
1/ 2/85	9	50.0	0.000
1/ 2/85	9	60.0	0.000
1/ 2/85	10	10.0	0.000
1/ 2/85	10	20.0	0.000
1/ 2/85	10	30.0	0.000
1/ 2/85	10	40.0	0.000
1/ 2/85	10	50.0	0.000
1/ 2/85	10	60.0	0.000
1/ 2/85	11	10.0	0.000
1/ 2/85	11	20.0	0.000
1/ 2/85	11	30.0	0.000
1/ 2/85	11	40.0	0.000
1/ 2/85	11	50.0	0.000

1

MAIN SYSTEM M1

1 YR. DESIGN STORM

SUMMARY OF QUANTITY RESULTS (INFLOW IN CFS) AT LOCATION 91

DATE MO/DA/YR	TIME HR:MIN		FLOW CFS
1/ 2/85	11	60.0	0.000
1/ 2/85	12	10.0	0.000
1/ 2/85	12	20.0	0.000

1/ 2/85	12	30.0	0.000
1/ 2/85	12	40.0	0.000
1/ 2/85	12	50.0	0.000
1/ 2/85	12	60.0	0.000
1/ 2/85	13	10.0	0.000
1/ 2/85	13	20.0	0.000
1/ 2/85	13	30.0	0.000
1/ 2/85	13	40.0	0.000
1/ 2/85	13	50.0	0.000
1/ 2/85	13	60.0	0.000
1/ 2/85	14	10.0	0.000
1/ 2/85	14	20.0	0.000
1/ 2/85	14	30.0	0.000
1/ 2/85	14	40.0	0.000
1/ 2/85	14	50.0	0.000
1/ 2/85	14	60.0	0.000
1/ 2/85	15	10.0	0.000
1/ 2/85	15	20.0	0.000
1/ 2/85	15	30.0	0.000
1/ 2/85	15	40.0	0.000
1/ 2/85	15	50.0	0.000
1/ 2/85	15	60.0	0.000
1/ 2/85	16	10.0	0.000
1/ 2/85	16	20.0	0.000
1/ 2/85	16	30.0	0.000
1/ 2/85	16	40.0	0.000
1/ 2/85	16	50.0	0.000
1/ 2/85	16	60.0	0.000
1/ 2/85	17	10.0	0.000
1/ 2/85	17	20.0	0.000
1/ 2/85	17	30.0	0.000
1/ 2/85	17	40.0	0.000
1/ 2/85	17	50.0	0.000
1/ 2/85	17	60.0	0.000
1/ 2/85	18	10.0	0.000
1/ 2/85	18	20.0	0.000
1/ 2/85	18	30.0	0.000
1/ 2/85	18	40.0	0.000
1/ 2/85	18	50.0	0.000
1/ 2/85	18	60.0	0.000
1/ 2/85	19	10.0	0.000
1/ 2/85	19	20.0	0.000
1/ 2/85	19	30.0	0.000
1/ 2/85	19	40.0	0.000
1/ 2/85	19	50.0	0.000
1/ 2/85	19	60.0	0.000

FLOW WT'D MEANS
+ 0.039

FLOW WT'D STD-DEVS
+ 0.953

TOTAL LOADS
+ 3532.304
CUB-FT
1
MAIN SYSTEM M1

1 YR. DESIGN STORM

SUMMARY OF QUANTITY RESULTS (INFLOW IN CFS) AT LOCATION 87

DATE MO/DA/YR	TIME HR:MIN	FLOW CFS
1/ 1/85	19 10.0	0.003
1/ 1/85	19 20.0	0.005
1/ 1/85	19 30.0	0.007
1/ 1/85	19 40.0	0.011
1/ 1/85	19 50.0	0.013
1/ 1/85	19 60.0	0.022
1/ 1/85	20 10.0	0.043
1/ 1/85	20 20.0	0.050
1/ 1/85	20 30.0	0.051
1/ 1/85	20 40.0	0.061
1/ 1/85	20 50.0	0.063
1/ 1/85	20 60.0	0.063
1/ 1/85	21 10.0	0.063
1/ 1/85	21 20.0	0.063
1/ 1/85	21 30.0	0.063
1/ 1/85	21 40.0	0.084
1/ 1/85	21 50.0	0.086
1/ 1/85	21 60.0	0.086
1/ 1/85	22 10.0	0.086
1/ 1/85	22 20.0	0.086
1/ 1/85	22 30.0	0.086
1/ 1/85	22 40.0	0.113
1/ 1/85	22 50.0	0.115
1/ 1/85	22 60.0	0.115
1/ 1/85	23 10.0	0.115
1/ 1/85	23 20.0	0.115
1/ 1/85	23 30.0	0.115
1/ 1/85	23 40.0	0.187
1/ 1/85	23 50.0	0.184
1/ 1/85	23 60.0	0.184
1/ 2/85	0 10.0	0.184
1/ 2/85	0 20.0	0.184
1/ 2/85	0 30.0	0.184
1/ 2/85	0 40.0	0.497
1/ 2/85	0 50.0	0.423
1/ 2/85	0 60.0	0.440
1/ 2/85	1 10.0	0.436

1/ 2/85	1 20.0	0.437
1/ 2/85	1 30.0	0.437
1/ 2/85	1 40.0	0.163
1/ 2/85	1 50.0	0.185
1/ 2/85	1 60.0	0.184
1/ 2/85	2 10.0	0.184
1/ 2/85	2 20.0	0.184
1/ 2/85	2 30.0	0.184
1/ 2/85	2 40.0	0.116
1/ 2/85	2 50.0	0.115
1/ 2/85	2 60.0	0.115
1/ 2/85	3 10.0	0.115
1/ 2/85	3 20.0	0.115
1/ 2/85	3 30.0	0.115

1

MAIN SYSTEM M1

1 YR. DESIGN STORM

SUMMARY OF QUANTITY RESULTS (INFLOW IN CFS) AT LOCATION 87

DATE MO/DA/YR	TIME HR:MIN	FLOW CFS
1/ 2/85	3 40.0	0.088
1/ 2/85	3 50.0	0.086
1/ 2/85	3 60.0	0.086
1/ 2/85	4 10.0	0.086
1/ 2/85	4 20.0	0.086
1/ 2/85	4 30.0	0.086
1/ 2/85	4 40.0	0.066
1/ 2/85	4 50.0	0.064
1/ 2/85	4 60.0	0.063
1/ 2/85	5 10.0	0.063
1/ 2/85	5 20.0	0.063
1/ 2/85	5 30.0	0.063
1/ 2/85	5 40.0	0.054
1/ 2/85	5 50.0	0.052
1/ 2/85	5 60.0	0.052
1/ 2/85	6 10.0	0.052
1/ 2/85	6 20.0	0.052
1/ 2/85	6 30.0	0.052
1/ 2/85	6 40.0	0.034
1/ 2/85	6 50.0	0.030
1/ 2/85	6 60.0	0.029
1/ 2/85	7 10.0	0.011
1/ 2/85	7 20.0	0.006
1/ 2/85	7 30.0	0.004
1/ 2/85	7 40.0	0.002
1/ 2/85	7 50.0	0.002
1/ 2/85	7 60.0	0.001

1/ 2/85	8	10.0	0.001
1/ 2/85	8	20.0	0.001
1/ 2/85	8	30.0	0.001
1/ 2/85	8	40.0	0.000
1/ 2/85	8	50.0	0.000
1/ 2/85	8	60.0	0.000
1/ 2/85	9	10.0	0.000
1/ 2/85	9	20.0	0.000
1/ 2/85	9	30.0	0.000
1/ 2/85	9	40.0	0.000
1/ 2/85	9	50.0	0.000
1/ 2/85	9	60.0	0.000
1/ 2/85	10	10.0	0.000
1/ 2/85	10	20.0	0.000
1/ 2/85	10	30.0	0.000
1/ 2/85	10	40.0	0.000
1/ 2/85	10	50.0	0.000
1/ 2/85	10	60.0	0.000
1/ 2/85	11	10.0	0.000
1/ 2/85	11	20.0	0.000
1/ 2/85	11	30.0	0.000
1/ 2/85	11	40.0	0.000
1/ 2/85	11	50.0	0.000

1

MAIN SYSTEM M1

1 YR. DESIGN STORM

SUMMARY OF QUANTITY RESULTS (INFLOW IN CFS) AT LOCATION 87

DATE MO/DA/YR	TIME HR:MIN		FLOW CFS
1/ 2/85	11	60.0	0.000
1/ 2/85	12	10.0	0.000
1/ 2/85	12	20.0	0.000
1/ 2/85	12	30.0	0.000
1/ 2/85	12	40.0	0.000
1/ 2/85	12	50.0	0.000
1/ 2/85	12	60.0	0.000
1/ 2/85	13	10.0	0.000
1/ 2/85	13	20.0	0.000
1/ 2/85	13	30.0	0.000
1/ 2/85	13	40.0	0.000
1/ 2/85	13	50.0	0.000
1/ 2/85	13	60.0	0.000
1/ 2/85	14	10.0	0.000
1/ 2/85	14	20.0	0.000
1/ 2/85	14	30.0	0.000
1/ 2/85	14	40.0	0.000
1/ 2/85	14	50.0	0.000

```
  1/ 2/85  14 60.0     0.000
  1/ 2/85  15 10.0     0.000
  1/ 2/85  15 20.0     0.000
  1/ 2/85  15 30.0     0.000
  1/ 2/85  15 40.0     0.000
  1/ 2/85  15 50.0     0.000
  1/ 2/85  15 60.0     0.000
  1/ 2/85  16 10.0     0.000
  1/ 2/85  16 20.0     0.000
  1/ 2/85  16 30.0     0.000
  1/ 2/85  16 40.0     0.000
  1/ 2/85  16 50.0     0.000
  1/ 2/85  16 60.0     0.000
  1/ 2/85  17 10.0     0.000
  1/ 2/85  17 20.0     0.000
  1/ 2/85  17 30.0     0.000
  1/ 2/85  17 40.0     0.000
  1/ 2/85  17 50.0     0.000
  1/ 2/85  17 60.0     0.000
  1/ 2/85  18 10.0     0.000
  1/ 2/85  18 20.0     0.000
  1/ 2/85  18 30.0     0.000
  1/ 2/85  18 40.0     0.000
  1/ 2/85  18 50.0     0.000
  1/ 2/85  18 60.0     0.000
  1/ 2/85  19 10.0     0.000
  1/ 2/85  19 20.0     0.000
  1/ 2/85  19 30.0     0.000
  1/ 2/85  19 40.0     0.000
  1/ 2/85  19 50.0     0.000
  1/ 2/85  19 60.0     0.000

 FLOW WT'D MEANS
+                 0.058

 FLOW WT'D STD-DEVS
+                 1.382

 TOTAL LOADS
+               5205.065
                 CUB-FT
1
   MAIN SYSTEM M1

                    1 YR. DESIGN STORM


   SUMMARY OF QUANTITY RESULTS ( INFLOW IN CFS) AT LOCATION    81


   DATE     TIME       FLOW
 MO/DA/YR  HR:MIN       CFS
```

1/ 1/85	19	10.0	0.004
1/ 1/85	19	20.0	0.005
1/ 1/85	19	30.0	0.005
1/ 1/85	19	40.0	0.010
1/ 1/85	19	50.0	0.010
1/ 1/85	19	60.0	0.029
1/ 1/85	20	10.0	0.039
1/ 1/85	20	20.0	0.038
1/ 1/85	20	30.0	0.038
1/ 1/85	20	40.0	0.048
1/ 1/85	20	50.0	0.047
1/ 1/85	20	60.0	0.047
1/ 1/85	21	10.0	0.047
1/ 1/85	21	20.0	0.047
1/ 1/85	21	30.0	0.047
1/ 1/85	21	40.0	0.068
1/ 1/85	21	50.0	0.063
1/ 1/85	21	60.0	0.064
1/ 1/85	22	10.0	0.064
1/ 1/85	22	20.0	0.064
1/ 1/85	22	30.0	0.064
1/ 1/85	22	40.0	0.091
1/ 1/85	22	50.0	0.084
1/ 1/85	22	60.0	0.086
1/ 1/85	23	10.0	0.085
1/ 1/85	23	20.0	0.085
1/ 1/85	23	30.0	0.085
1/ 1/85	23	40.0	0.156
1/ 1/85	23	50.0	0.130
1/ 1/85	23	60.0	0.139
1/ 2/85	0	10.0	0.136
1/ 2/85	0	20.0	0.137
1/ 2/85	0	30.0	0.136
1/ 2/85	0	40.0	0.434
1/ 2/85	0	50.0	0.275
1/ 2/85	0	60.0	0.349
1/ 2/85	1	10.0	0.312
1/ 2/85	1	20.0	0.330
1/ 2/85	1	30.0	0.321
1/ 2/85	1	40.0	0.084
1/ 2/85	1	50.0	0.156
1/ 2/85	1	60.0	0.130
1/ 2/85	2	10.0	0.139
1/ 2/85	2	20.0	0.136
1/ 2/85	2	30.0	0.137
1/ 2/85	2	40.0	0.073
1/ 2/85	2	50.0	0.089
1/ 2/85	2	60.0	0.084
1/ 2/85	3	10.0	0.086
1/ 2/85	3	20.0	0.085
1/ 2/85	3	30.0	0.085

MAIN SYSTEM M1

1 YR. DESIGN STORM

SUMMARY OF QUANTITY RESULTS (INFLOW IN CFS) AT LOCATION 81

DATE MO/DA/YR	TIME HR:MIN	FLOW CFS
1/ 2/85	3 40.0	0.060
1/ 2/85	3 50.0	0.065
1/ 2/85	3 60.0	0.064
1/ 2/85	4 10.0	0.064
1/ 2/85	4 20.0	0.064
1/ 2/85	4 30.0	0.064
1/ 2/85	4 40.0	0.044
1/ 2/85	4 50.0	0.047
1/ 2/85	4 60.0	0.047
1/ 2/85	5 10.0	0.047
1/ 2/85	5 20.0	0.047
1/ 2/85	5 30.0	0.047
1/ 2/85	5 40.0	0.037
1/ 2/85	5 50.0	0.038
1/ 2/85	5 60.0	0.038
1/ 2/85	6 10.0	0.038
1/ 2/85	6 20.0	0.038
1/ 2/85	6 30.0	0.038
1/ 2/85	6 40.0	0.021
1/ 2/85	6 50.0	0.021
1/ 2/85	6 60.0	0.021
1/ 2/85	7 10.0	0.004
1/ 2/85	7 20.0	0.002
1/ 2/85	7 30.0	0.001
1/ 2/85	7 40.0	0.001
1/ 2/85	7 50.0	0.000
1/ 2/85	7 60.0	0.000
1/ 2/85	8 10.0	0.000
1/ 2/85	8 20.0	0.000
1/ 2/85	8 30.0	0.000
1/ 2/85	8 40.0	0.000
1/ 2/85	8 50.0	0.000
1/ 2/85	8 60.0	0.000
1/ 2/85	9 10.0	0.000
1/ 2/85	9 20.0	0.000
1/ 2/85	9 30.0	0.000
1/ 2/85	9 40.0	0.000
1/ 2/85	9 50.0	0.000
1/ 2/85	9 60.0	0.000
1/ 2/85	10 10.0	0.000
1/ 2/85	10 20.0	0.000
1/ 2/85	10 30.0	0.000

1/ 2/85	10 40.0	0.000
1/ 2/85	10 50.0	0.000
1/ 2/85	10 60.0	0.000
1/ 2/85	11 10.0	0.000
1/ 2/85	11 20.0	0.000
1/ 2/85	11 30.0	0.000
1/ 2/85	11 40.0	0.000
1/ 2/85	11 50.0	0.000

1

MAIN SYSTEM M1

1 YR. DESIGN STORM

SUMMARY OF QUANTITY RESULTS (INFLOW IN CFS) AT LOCATION 81

DATE MO/DA/YR	TIME HR:MIN	FLOW CFS
1/ 2/85	11 60.0	0.000
1/ 2/85	12 10.0	0.000
1/ 2/85	12 20.0	0.000
1/ 2/85	12 30.0	0.000
1/ 2/85	12 40.0	0.000
1/ 2/85	12 50.0	0.000
1/ 2/85	12 60.0	0.000
1/ 2/85	13 10.0	0.000
1/ 2/85	13 20.0	0.000
1/ 2/85	13 30.0	0.000
1/ 2/85	13 40.0	0.000
1/ 2/85	13 50.0	0.000
1/ 2/85	13 60.0	0.000
1/ 2/85	14 10.0	0.000
1/ 2/85	14 20.0	0.000
1/ 2/85	14 30.0	0.000
1/ 2/85	14 40.0	0.000
1/ 2/85	14 50.0	0.000
1/ 2/85	14 60.0	0.000
1/ 2/85	15 10.0	0.000
1/ 2/85	15 20.0	0.000
1/ 2/85	15 30.0	0.000
1/ 2/85	15 40.0	0.000
1/ 2/85	15 50.0	0.000
1/ 2/85	15 60.0	0.000
1/ 2/85	16 10.0	0.000
1/ 2/85	16 20.0	0.000
1/ 2/85	16 30.0	0.000
1/ 2/85	16 40.0	0.000
1/ 2/85	16 50.0	0.000
1/ 2/85	16 60.0	0.000
1/ 2/85	17 10.0	0.000
1/ 2/85	17 20.0	0.000

1/ 2/85	17 30.0	0.000
1/ 2/85	17 40.0	0.000
1/ 2/85	17 50.0	0.000
1/ 2/85	17 60.0	0.000
1/ 2/85	18 10.0	0.000
1/ 2/85	18 20.0	0.000
1/ 2/85	18 30.0	0.000
1/ 2/85	18 40.0	0.000
1/ 2/85	18 50.0	0.000
1/ 2/85	18 60.0	0.000
1/ 2/85	19 10.0	0.000
1/ 2/85	19 20.0	0.000
1/ 2/85	19 30.0	0.000
1/ 2/85	19 40.0	0.000
1/ 2/85	19 50.0	0.000
1/ 2/85	19 60.0	0.000

FLOW WT'D MEANS
+ 0.043

FLOW WT'D STD-DEVS
+ 1.045

TOTAL LOADS
+ 3879.058
CUB-FT
1
MAIN SYSTEM M1

1 YR. DESIGN STORM

SUMMARY OF QUANTITY RESULTS (INFLOW IN CFS) AT LOCATION 85

DATE MO/DA/YR	TIME HR:MIN	FLOW CFS
1/ 1/85	19 10.0	0.005
1/ 1/85	19 20.0	0.008
1/ 1/85	19 30.0	0.009
1/ 1/85	19 40.0	0.016
1/ 1/85	19 50.0	0.017
1/ 1/85	19 60.0	0.034
1/ 1/85	20 10.0	0.062
1/ 1/85	20 20.0	0.069
1/ 1/85	20 30.0	0.070
1/ 1/85	20 40.0	0.084
1/ 1/85	20 50.0	0.085
1/ 1/85	20 60.0	0.085
1/ 1/85	21 10.0	0.085
1/ 1/85	21 20.0	0.085
1/ 1/85	21 30.0	0.085

1/ 1/85	21 40.0	0.115
1/ 1/85	21 50.0	0.116
1/ 1/85	21 60.0	0.116
1/ 1/85	22 10.0	0.116
1/ 1/85	22 20.0	0.116
1/ 1/85	22 30.0	0.116
1/ 1/85	22 40.0	0.156
1/ 1/85	22 50.0	0.155
1/ 1/85	22 60.0	0.155
1/ 1/85	23 10.0	0.155
1/ 1/85	23 20.0	0.155
1/ 1/85	23 30.0	0.155
1/ 1/85	23 40.0	0.260
1/ 1/85	23 50.0	0.247
1/ 1/85	23 60.0	0.249
1/ 2/85	0 10.0	0.248
1/ 2/85	0 20.0	0.248
1/ 2/85	0 30.0	0.248
1/ 2/85	0 40.0	0.702
1/ 2/85	0 50.0	0.558
1/ 2/85	0 60.0	0.600
1/ 2/85	1 10.0	0.587
1/ 2/85	1 20.0	0.591
1/ 2/85	1 30.0	0.590
1/ 2/85	1 40.0	0.202
1/ 2/85	1 50.0	0.254
1/ 2/85	1 60.0	0.248
1/ 2/85	2 10.0	0.249
1/ 2/85	2 20.0	0.248
1/ 2/85	2 30.0	0.248
1/ 2/85	2 40.0	0.150
1/ 2/85	2 50.0	0.155
1/ 2/85	2 60.0	0.155
1/ 2/85	3 10.0	0.155
1/ 2/85	3 20.0	0.155
1/ 2/85	3 30.0	0.155

1

MAIN SYSTEM M1

1 YR. DESIGN STORM

SUMMARY OF QUANTITY RESULTS (INFLOW IN CFS) AT LOCATION 85

DATE MO/DA/YR	TIME HR:MIN	FLOW CFS
1/ 2/85	3 40.0	0.117
1/ 2/85	3 50.0	0.116
1/ 2/85	3 60.0	0.116
1/ 2/85	4 10.0	0.116
1/ 2/85	4 20.0	0.116

1/ 2/85	4	30.0	0.116
1/ 2/85	4	40.0	0.087
1/ 2/85	4	50.0	0.086
1/ 2/85	4	60.0	0.085
1/ 2/85	5	10.0	0.085
1/ 2/85	5	20.0	0.085
1/ 2/85	5	30.0	0.085
1/ 2/85	5	40.0	0.072
1/ 2/85	5	50.0	0.070
1/ 2/85	5	60.0	0.070
1/ 2/85	6	10.0	0.070
1/ 2/85	6	20.0	0.070
1/ 2/85	6	30.0	0.070
1/ 2/85	6	40.0	0.044
1/ 2/85	6	50.0	0.040
1/ 2/85	6	60.0	0.039
1/ 2/85	7	10.0	0.013
1/ 2/85	7	20.0	0.007
1/ 2/85	7	30.0	0.004
1/ 2/85	7	40.0	0.002
1/ 2/85	7	50.0	0.002
1/ 2/85	7	60.0	0.001
1/ 2/85	8	10.0	0.001
1/ 2/85	8	20.0	0.001
1/ 2/85	8	30.0	0.001
1/ 2/85	8	40.0	0.000
1/ 2/85	8	50.0	0.000
1/ 2/85	8	60.0	0.000
1/ 2/85	9	10.0	0.000
1/ 2/85	9	20.0	0.000
1/ 2/85	9	30.0	0.000
1/ 2/85	9	40.0	0.000
1/ 2/85	9	50.0	0.000
1/ 2/85	9	60.0	0.000
1/ 2/85	10	10.0	0.000
1/ 2/85	10	20.0	0.000
1/ 2/85	10	30.0	0.000
1/ 2/85	10	40.0	0.000
1/ 2/85	10	50.0	0.000
1/ 2/85	10	60.0	0.000
1/ 2/85	11	10.0	0.000
1/ 2/85	11	20.0	0.000
1/ 2/85	11	30.0	0.000
1/ 2/85	11	40.0	0.000
1/ 2/85	11	50.0	0.000

1

MAIN SYSTEM M1

1 YR. DESIGN STORM

SUMMARY OF QUANTITY RESULTS (INFLOW IN CFS) AT LOCATION 85

DATE MO/DA/YR	TIME HR:MIN	FLOW CFS
1/ 2/85	11 60.0	0.000
1/ 2/85	12 10.0	0.000
1/ 2/85	12 20.0	0.000
1/ 2/85	12 30.0	0.000
1/ 2/85	12 40.0	0.000
1/ 2/85	12 50.0	0.000
1/ 2/85	12 60.0	0.000
1/ 2/85	13 10.0	0.000
1/ 2/85	13 20.0	0.000
1/ 2/85	13 30.0	0.000
1/ 2/85	13 40.0	0.000
1/ 2/85	13 50.0	0.000
1/ 2/85	13 60.0	0.000
1/ 2/85	14 10.0	0.000
1/ 2/85	14 20.0	0.000
1/ 2/85	14 30.0	0.000
1/ 2/85	14 40.0	0.000
1/ 2/85	14 50.0	0.000
1/ 2/85	14 60.0	0.000
1/ 2/85	15 10.0	0.000
1/ 2/85	15 20.0	0.000
1/ 2/85	15 30.0	0.000
1/ 2/85	15 40.0	0.000
1/ 2/85	15 50.0	0.000
1/ 2/85	15 60.0	0.000
1/ 2/85	16 10.0	0.000
1/ 2/85	16 20.0	0.000
1/ 2/85	16 30.0	0.000
1/ 2/85	16 40.0	0.000
1/ 2/85	16 50.0	0.000
1/ 2/85	16 60.0	0.000
1/ 2/85	17 10.0	0.000
1/ 2/85	17 20.0	0.000
1/ 2/85	17 30.0	0.000
1/ 2/85	17 40.0	0.000
1/ 2/85	17 50.0	0.000
1/ 2/85	17 60.0	0.000
1/ 2/85	18 10.0	0.000
1/ 2/85	18 20.0	0.000
1/ 2/85	18 30.0	0.000
1/ 2/85	18 40.0	0.000
1/ 2/85	18 50.0	0.000
1/ 2/85	18 60.0	0.000
1/ 2/85	19 10.0	0.000
1/ 2/85	19 20.0	0.000
1/ 2/85	19 30.0	0.000
1/ 2/85	19 40.0	0.000
1/ 2/85	19 50.0	0.000

1/ 2/85 19 60.0 0.000

FLOW WT'D MEANS
+ 0.078

FLOW WT'D STD-DEVS
+ 1.875

TOTAL LOADS
+ 7037.073
CUB-FT
1
MAIN SYSTEM M1

1 YR. DESIGN STORM

SUMMARY OF QUANTITY RESULTS (INFLOW IN CFS) AT LOCATION 124

DATE MO/DA/YR	TIME HR:MIN	FLOW CFS
1/ 1/85	19 10.0	0.002
1/ 1/85	19 20.0	0.004
1/ 1/85	19 30.0	0.005
1/ 1/85	19 40.0	0.008
1/ 1/85	19 50.0	0.008
1/ 1/85	19 60.0	0.017
1/ 1/85	20 10.0	0.031
1/ 1/85	20 20.0	0.034
1/ 1/85	20 30.0	0.034
1/ 1/85	20 40.0	0.041
1/ 1/85	20 50.0	0.041
1/ 1/85	20 60.0	0.041
1/ 1/85	21 10.0	0.041
1/ 1/85	21 20.0	0.041
1/ 1/85	21 30.0	0.041
1/ 1/85	21 40.0	0.056
1/ 1/85	21 50.0	0.057
1/ 1/85	21 60.0	0.057
1/ 1/85	22 10.0	0.057
1/ 1/85	22 20.0	0.057
1/ 1/85	22 30.0	0.057
1/ 1/85	22 40.0	0.076
1/ 1/85	22 50.0	0.075
1/ 1/85	22 60.0	0.075
1/ 1/85	23 10.0	0.075
1/ 1/85	23 20.0	0.075
1/ 1/85	23 30.0	0.075
1/ 1/85	23 40.0	0.127
1/ 1/85	23 50.0	0.120
1/ 1/85	23 60.0	0.121

1/ 2/85	0 10.0	0.121
1/ 2/85	0 20.0	0.121
1/ 2/85	0 30.0	0.121
1/ 2/85	0 40.0	0.344
1/ 2/85	0 50.0	0.269
1/ 2/85	0 60.0	0.292
1/ 2/85	1 10.0	0.285
1/ 2/85	1 20.0	0.287
1/ 2/85	1 30.0	0.286
1/ 2/85	1 40.0	0.096
1/ 2/85	1 50.0	0.124
1/ 2/85	1 60.0	0.120
1/ 2/85	2 10.0	0.121
1/ 2/85	2 20.0	0.121
1/ 2/85	2 30.0	0.121
1/ 2/85	2 40.0	0.072
1/ 2/85	2 50.0	0.076
1/ 2/85	2 60.0	0.075
1/ 2/85	3 10.0	0.075
1/ 2/85	3 20.0	0.075
1/ 2/85	3 30.0	0.075

1

MAIN SYSTEM M1

1 YR. DESIGN STORM

SUMMARY OF QUANTITY RESULTS (INFLOW IN CFS) AT LOCATION 124

DATE MO/DA/YR	TIME HR:MIN	FLOW CFS
1/ 2/85	3 40.0	0.056
1/ 2/85	3 50.0	0.057
1/ 2/85	3 60.0	0.057
1/ 2/85	4 10.0	0.057
1/ 2/85	4 20.0	0.057
1/ 2/85	4 30.0	0.057
1/ 2/85	4 40.0	0.042
1/ 2/85	4 50.0	0.042
1/ 2/85	4 60.0	0.041
1/ 2/85	5 10.0	0.041
1/ 2/85	5 20.0	0.041
1/ 2/85	5 30.0	0.041
1/ 2/85	5 40.0	0.035
1/ 2/85	5 50.0	0.034
1/ 2/85	5 60.0	0.034
1/ 2/85	6 10.0	0.034
1/ 2/85	6 20.0	0.034
1/ 2/85	6 30.0	0.034
1/ 2/85	6 40.0	0.021
1/ 2/85	6 50.0	0.019

1/ 2/85	6	60.0	0.019
1/ 2/85	7	10.0	0.006
1/ 2/85	7	20.0	0.003
1/ 2/85	7	30.0	0.002
1/ 2/85	7	40.0	0.001
1/ 2/85	7	50.0	0.001
1/ 2/85	7	60.0	0.001
1/ 2/85	8	10.0	0.000
1/ 2/85	8	20.0	0.000
1/ 2/85	8	30.0	0.000
1/ 2/85	8	40.0	0.000
1/ 2/85	8	50.0	0.000
1/ 2/85	8	60.0	0.000
1/ 2/85	9	10.0	0.000
1/ 2/85	9	20.0	0.000
1/ 2/85	9	30.0	0.000
1/ 2/85	9	40.0	0.000
1/ 2/85	9	50.0	0.000
1/ 2/85	9	60.0	0.000
1/ 2/85	10	10.0	0.000
1/ 2/85	10	20.0	0.000
1/ 2/85	10	30.0	0.000
1/ 2/85	10	40.0	0.000
1/ 2/85	10	50.0	0.000
1/ 2/85	10	60.0	0.000
1/ 2/85	11	10.0	0.000
1/ 2/85	11	20.0	0.000
1/ 2/85	11	30.0	0.000
1/ 2/85	11	40.0	0.000
1/ 2/85	11	50.0	0.000

1

MAIN SYSTEM M1

1 YR. DESIGN STORM

SUMMARY OF QUANTITY RESULTS (INFLOW IN CFS) AT LOCATION 124

DATE MO/DA/YR	TIME HR:MIN		FLOW CFS
1/ 2/85	11	60.0	0.000
1/ 2/85	12	10.0	0.000
1/ 2/85	12	20.0	0.000
1/ 2/85	12	30.0	0.000
1/ 2/85	12	40.0	0.000
1/ 2/85	12	50.0	0.000
1/ 2/85	12	60.0	0.000
1/ 2/85	13	10.0	0.000
1/ 2/85	13	20.0	0.000
1/ 2/85	13	30.0	0.000
1/ 2/85	13	40.0	0.000

```
  1/ 2/85  13 50.0     0.000
  1/ 2/85  13 60.0     0.000
  1/ 2/85  14 10.0     0.000
  1/ 2/85  14 20.0     0.000
  1/ 2/85  14 30.0     0.000
  1/ 2/85  14 40.0     0.000
  1/ 2/85  14 50.0     0.000
  1/ 2/85  14 60.0     0.000
  1/ 2/85  15 10.0     0.000
  1/ 2/85  15 20.0     0.000
  1/ 2/85  15 30.0     0.000
  1/ 2/85  15 40.0     0.000
  1/ 2/85  15 50.0     0.000
  1/ 2/85  15 60.0     0.000
  1/ 2/85  16 10.0     0.000
  1/ 2/85  16 20.0     0.000
  1/ 2/85  16 30.0     0.000
  1/ 2/85  16 40.0     0.000
  1/ 2/85  16 50.0     0.000
  1/ 2/85  16 60.0     0.000
  1/ 2/85  17 10.0     0.000
  1/ 2/85  17 20.0     0.000
  1/ 2/85  17 30.0     0.000
  1/ 2/85  17 40.0     0.000
  1/ 2/85  17 50.0     0.000
  1/ 2/85  17 60.0     0.000
  1/ 2/85  18 10.0     0.000
  1/ 2/85  18 20.0     0.000
  1/ 2/85  18 30.0     0.000
  1/ 2/85  18 40.0     0.000
  1/ 2/85  18 50.0     0.000
  1/ 2/85  18 60.0     0.000
  1/ 2/85  19 10.0     0.000
  1/ 2/85  19 20.0     0.000
  1/ 2/85  19 30.0     0.000
  1/ 2/85  19 40.0     0.000
  1/ 2/85  19 50.0     0.000
  1/ 2/85  19 60.0     0.000

 FLOW WT'D MEANS
+                 0.038

 FLOW WT'D STD-DEVS
+                 0.911

 TOTAL LOADS
+               3418.603
                 CUB-FT
1
   MAIN SYSTEM M1

                    1 YR. DESIGN STORM
```

SUMMARY OF QUANTITY RESULTS (INFLOW IN CFS) AT LOCATION 22

DATE MO/DA/YR	TIME HR:MIN	FLOW CFS
1/ 1/85	19 10.0	0.003
1/ 1/85	19 20.0	0.004
1/ 1/85	19 30.0	0.004
1/ 1/85	19 40.0	0.007
1/ 1/85	19 50.0	0.007
1/ 1/85	19 60.0	0.019
1/ 1/85	20 10.0	0.028
1/ 1/85	20 20.0	0.027
1/ 1/85	20 30.0	0.027
1/ 1/85	20 40.0	0.034
1/ 1/85	20 50.0	0.033
1/ 1/85	20 60.0	0.033
1/ 1/85	21 10.0	0.033
1/ 1/85	21 20.0	0.033
1/ 1/85	21 30.0	0.033
1/ 1/85	21 40.0	0.047
1/ 1/85	21 50.0	0.045
1/ 1/85	21 60.0	0.045
1/ 1/85	22 10.0	0.045
1/ 1/85	22 20.0	0.045
1/ 1/85	22 30.0	0.045
1/ 1/85	22 40.0	0.064
1/ 1/85	22 50.0	0.059
1/ 1/85	22 60.0	0.060
1/ 1/85	23 10.0	0.060
1/ 1/85	23 20.0	0.060
1/ 1/85	23 30.0	0.060
1/ 1/85	23 40.0	0.109
1/ 1/85	23 50.0	0.092
1/ 1/85	23 60.0	0.097
1/ 2/85	0 10.0	0.095
1/ 2/85	0 20.0	0.096
1/ 2/85	0 30.0	0.096
1/ 2/85	0 40.0	0.302
1/ 2/85	0 50.0	0.195
1/ 2/85	0 60.0	0.244
1/ 2/85	1 10.0	0.220
1/ 2/85	1 20.0	0.231
1/ 2/85	1 30.0	0.226
1/ 2/85	1 40.0	0.061
1/ 2/85	1 50.0	0.108
1/ 2/85	1 60.0	0.092
1/ 2/85	2 10.0	0.097
1/ 2/85	2 20.0	0.095
1/ 2/85	2 30.0	0.096

1/ 2/85	2 40.0	0.052
1/ 2/85	2 50.0	0.062
1/ 2/85	2 60.0	0.059
1/ 2/85	3 10.0	0.060
1/ 2/85	3 20.0	0.060
1/ 2/85	3 30.0	0.060

1

MAIN SYSTEM M1

1 YR. DESIGN STORM

SUMMARY OF QUANTITY RESULTS (INFLOW IN CFS) AT LOCATION 22

DATE MO/DA/YR	TIME HR:MIN	FLOW CFS
1/ 2/85	3 40.0	0.042
1/ 2/85	3 50.0	0.045
1/ 2/85	3 60.0	0.045
1/ 2/85	4 10.0	0.045
1/ 2/85	4 20.0	0.045
1/ 2/85	4 30.0	0.045
1/ 2/85	4 40.0	0.031
1/ 2/85	4 50.0	0.033
1/ 2/85	4 60.0	0.033
1/ 2/85	5 10.0	0.033
1/ 2/85	5 20.0	0.033
1/ 2/85	5 30.0	0.033
1/ 2/85	5 40.0	0.026
1/ 2/85	5 50.0	0.027
1/ 2/85	5 60.0	0.027
1/ 2/85	6 10.0	0.027
1/ 2/85	6 20.0	0.027
1/ 2/85	6 30.0	0.027
1/ 2/85	6 40.0	0.015
1/ 2/85	6 50.0	0.015
1/ 2/85	6 60.0	0.015
1/ 2/85	7 10.0	0.003
1/ 2/85	7 20.0	0.001
1/ 2/85	7 30.0	0.001
1/ 2/85	7 40.0	0.000
1/ 2/85	7 50.0	0.000
1/ 2/85	7 60.0	0.000
1/ 2/85	8 10.0	0.000
1/ 2/85	8 20.0	0.000
1/ 2/85	8 30.0	0.000
1/ 2/85	8 40.0	0.000
1/ 2/85	8 50.0	0.000
1/ 2/85	8 60.0	0.000
1/ 2/85	9 10.0	0.000
1/ 2/85	9 20.0	0.000

1/ 2/85	9 30.0	0.000
1/ 2/85	9 40.0	0.000
1/ 2/85	9 50.0	0.000
1/ 2/85	9 60.0	0.000
1/ 2/85	10 10.0	0.000
1/ 2/85	10 20.0	0.000
1/ 2/85	10 30.0	0.000
1/ 2/85	10 40.0	0.000
1/ 2/85	10 50.0	0.000
1/ 2/85	10 60.0	0.000
1/ 2/85	11 10.0	0.000
1/ 2/85	11 20.0	0.000
1/ 2/85	11 30.0	0.000
1/ 2/85	11 40.0	0.000
1/ 2/85	11 50.0	0.000

1

MAIN SYSTEM M1

1 YR. DESIGN STORM

SUMMARY OF QUANTITY RESULTS (INFLOW IN CFS) AT LOCATION 22

DATE MO/DA/YR	TIME HR:MIN	FLOW CFS
1/ 2/85	11 60.0	0.000
1/ 2/85	12 10.0	0.000
1/ 2/85	12 20.0	0.000
1/ 2/85	12 30.0	0.000
1/ 2/85	12 40.0	0.000
1/ 2/85	12 50.0	0.000
1/ 2/85	12 60.0	0.000
1/ 2/85	13 10.0	0.000
1/ 2/85	13 20.0	0.000
1/ 2/85	13 30.0	0.000
1/ 2/85	13 40.0	0.000
1/ 2/85	13 50.0	0.000
1/ 2/85	13 60.0	0.000
1/ 2/85	14 10.0	0.000
1/ 2/85	14 20.0	0.000
1/ 2/85	14 30.0	0.000
1/ 2/85	14 40.0	0.000
1/ 2/85	14 50.0	0.000
1/ 2/85	14 60.0	0.000
1/ 2/85	15 10.0	0.000
1/ 2/85	15 20.0	0.000
1/ 2/85	15 30.0	0.000
1/ 2/85	15 40.0	0.000
1/ 2/85	15 50.0	0.000
1/ 2/85	15 60.0	0.000
1/ 2/85	16 10.0	0.000

1/ 2/85	16 20.0	0.000
1/ 2/85	16 30.0	0.000
1/ 2/85	16 40.0	0.000
1/ 2/85	16 50.0	0.000
1/ 2/85	16 60.0	0.000
1/ 2/85	17 10.0	0.000
1/ 2/85	17 20.0	0.000
1/ 2/85	17 30.0	0.000
1/ 2/85	17 40.0	0.000
1/ 2/85	17 50.0	0.000
1/ 2/85	17 60.0	0.000
1/ 2/85	18 10.0	0.000
1/ 2/85	18 20.0	0.000
1/ 2/85	18 30.0	0.000
1/ 2/85	18 40.0	0.000
1/ 2/85	18 50.0	0.000
1/ 2/85	18 60.0	0.000
1/ 2/85	19 10.0	0.000
1/ 2/85	19 20.0	0.000
1/ 2/85	19 30.0	0.000
1/ 2/85	19 40.0	0.000
1/ 2/85	19 50.0	0.000
1/ 2/85	19 60.0	0.000

FLOW WT'D MEANS
+ 0.030

FLOW WT'D STD-DEVS
+ 0.733

TOTAL LOADS
+ 2722.608
CUB-FT
1
MAIN SYSTEM M1

1 YR. DESIGN STORM

SUMMARY OF QUANTITY RESULTS (INFLOW IN CFS) AT LOCATION 58

DATE MO/DA/YR	TIME HR:MIN	FLOW CFS
1/ 1/85	19 10.0	0.003
1/ 1/85	19 20.0	0.006
1/ 1/85	19 30.0	0.007
1/ 1/85	19 40.0	0.012
1/ 1/85	19 50.0	0.013
1/ 1/85	19 60.0	0.024
1/ 1/85	20 10.0	0.046
1/ 1/85	20 20.0	0.053

1/ 1/85	20	30.0	0.055
1/ 1/85	20	40.0	0.065
1/ 1/85	20	50.0	0.067
1/ 1/85	20	60.0	0.067
1/ 1/85	21	10.0	0.068
1/ 1/85	21	20.0	0.068
1/ 1/85	21	30.0	0.068
1/ 1/85	21	40.0	0.089
1/ 1/85	21	50.0	0.092
1/ 1/85	21	60.0	0.092
1/ 1/85	22	10.0	0.092
1/ 1/85	22	20.0	0.092
1/ 1/85	22	30.0	0.092
1/ 1/85	22	40.0	0.121
1/ 1/85	22	50.0	0.123
1/ 1/85	22	60.0	0.123
1/ 1/85	23	10.0	0.123
1/ 1/85	23	20.0	0.123
1/ 1/85	23	30.0	0.123
1/ 1/85	23	40.0	0.200
1/ 1/85	23	50.0	0.196
1/ 1/85	23	60.0	0.197
1/ 2/85	0	10.0	0.197
1/ 2/85	0	20.0	0.197
1/ 2/85	0	30.0	0.197
1/ 2/85	0	40.0	0.532
1/ 2/85	0	50.0	0.452
1/ 2/85	0	60.0	0.470
1/ 2/85	1	10.0	0.466
1/ 2/85	1	20.0	0.467
1/ 2/85	1	30.0	0.467
1/ 2/85	1	40.0	0.173
1/ 2/85	1	50.0	0.198
1/ 2/85	1	60.0	0.196
1/ 2/85	2	10.0	0.197
1/ 2/85	2	20.0	0.197
1/ 2/85	2	30.0	0.197
1/ 2/85	2	40.0	0.123
1/ 2/85	2	50.0	0.123
1/ 2/85	2	60.0	0.123
1/ 2/85	3	10.0	0.123
1/ 2/85	3	20.0	0.123
1/ 2/85	3	30.0	0.123

1

MAIN SYSTEM M1

1 YR. DESIGN STORM

SUMMARY OF QUANTITY RESULTS (INFLOW IN CFS) AT LOCATION 58

DATE MO/DA/YR	TIME HR:MIN	FLOW CFS
1/ 2/85	3 40.0	0.094
1/ 2/85	3 50.0	0.092
1/ 2/85	3 60.0	0.092
1/ 2/85	4 10.0	0.092
1/ 2/85	4 20.0	0.092
1/ 2/85	4 30.0	0.092
1/ 2/85	4 40.0	0.071
1/ 2/85	4 50.0	0.068
1/ 2/85	4 60.0	0.068
1/ 2/85	5 10.0	0.068
1/ 2/85	5 20.0	0.068
1/ 2/85	5 30.0	0.068
1/ 2/85	5 40.0	0.057
1/ 2/85	5 50.0	0.056
1/ 2/85	5 60.0	0.055
1/ 2/85	6 10.0	0.055
1/ 2/85	6 20.0	0.055
1/ 2/85	6 30.0	0.055
1/ 2/85	6 40.0	0.037
1/ 2/85	6 50.0	0.032
1/ 2/85	6 60.0	0.031
1/ 2/85	7 10.0	0.012
1/ 2/85	7 20.0	0.006
1/ 2/85	7 30.0	0.004
1/ 2/85	7 40.0	0.002
1/ 2/85	7 50.0	0.002
1/ 2/85	7 60.0	0.001
1/ 2/85	8 10.0	0.001
1/ 2/85	8 20.0	0.001
1/ 2/85	8 30.0	0.001
1/ 2/85	8 40.0	0.000
1/ 2/85	8 50.0	0.000
1/ 2/85	8 60.0	0.000
1/ 2/85	9 10.0	0.000
1/ 2/85	9 20.0	0.000
1/ 2/85	9 30.0	0.000
1/ 2/85	9 40.0	0.000
1/ 2/85	9 50.0	0.000
1/ 2/85	9 60.0	0.000
1/ 2/85	10 10.0	0.000
1/ 2/85	10 20.0	0.000
1/ 2/85	10 30.0	0.000
1/ 2/85	10 40.0	0.000
1/ 2/85	10 50.0	0.000
1/ 2/85	10 60.0	0.000
1/ 2/85	11 10.0	0.000
1/ 2/85	11 20.0	0.000
1/ 2/85	11 30.0	0.000
1/ 2/85	11 40.0	0.000
1/ 2/85	11 50.0	0.000

1

MAIN SYSTEM M1

1 YR. DESIGN STORM

SUMMARY OF QUANTITY RESULTS (INFLOW IN CFS) AT LOCATION 58

DATE MO/DA/YR	TIME HR:MIN	FLOW CFS
1/ 2/85	11 60.0	0.000
1/ 2/85	12 10.0	0.000
1/ 2/85	12 20.0	0.000
1/ 2/85	12 30.0	0.000
1/ 2/85	12 40.0	0.000
1/ 2/85	12 50.0	0.000
1/ 2/85	12 60.0	0.000
1/ 2/85	13 10.0	0.000
1/ 2/85	13 20.0	0.000
1/ 2/85	13 30.0	0.000
1/ 2/85	13 40.0	0.000
1/ 2/85	13 50.0	0.000
1/ 2/85	13 60.0	0.000
1/ 2/85	14 10.0	0.000
1/ 2/85	14 20.0	0.000
1/ 2/85	14 30.0	0.000
1/ 2/85	14 40.0	0.000
1/ 2/85	14 50.0	0.000
1/ 2/85	14 60.0	0.000
1/ 2/85	15 10.0	0.000
1/ 2/85	15 20.0	0.000
1/ 2/85	15 30.0	0.000
1/ 2/85	15 40.0	0.000
1/ 2/85	15 50.0	0.000
1/ 2/85	15 60.0	0.000
1/ 2/85	16 10.0	0.000
1/ 2/85	16 20.0	0.000
1/ 2/85	16 30.0	0.000
1/ 2/85	16 40.0	0.000
1/ 2/85	16 50.0	0.000
1/ 2/85	16 60.0	0.000
1/ 2/85	17 10.0	0.000
1/ 2/85	17 20.0	0.000
1/ 2/85	17 30.0	0.000
1/ 2/85	17 40.0	0.000
1/ 2/85	17 50.0	0.000
1/ 2/85	17 60.0	0.000
1/ 2/85	18 10.0	0.000
1/ 2/85	18 20.0	0.000
1/ 2/85	18 30.0	0.000
1/ 2/85	18 40.0	0.000

1/ 2/85	18 50.0	0.000
1/ 2/85	18 60.0	0.000
1/ 2/85	19 10.0	0.000
1/ 2/85	19 20.0	0.000
1/ 2/85	19 30.0	0.000
1/ 2/85	19 40.0	0.000
1/ 2/85	19 50.0	0.000
1/ 2/85	19 60.0	0.000

FLOW WT'D MEANS
+ 0.062

FLOW WT'D STD-DEVS
+ 1.477

TOTAL LOADS
+ 5561.411
CUB-FT
1
MAIN SYSTEM M1

1 YR. DESIGN STORM

SUMMARY OF QUANTITY RESULTS (INFLOW IN CFS) AT LOCATION 20

DATE MO/DA/YR	TIME HR:MIN	FLOW CFS
1/ 1/85	19 10.0	0.003
1/ 1/85	19 20.0	0.005
1/ 1/85	19 30.0	0.006
1/ 1/85	19 40.0	0.011
1/ 1/85	19 50.0	0.012
1/ 1/85	19 60.0	0.023
1/ 1/85	20 10.0	0.042
1/ 1/85	20 20.0	0.046
1/ 1/85	20 30.0	0.047
1/ 1/85	20 40.0	0.057
1/ 1/85	20 50.0	0.058
1/ 1/85	20 60.0	0.058
1/ 1/85	21 10.0	0.058
1/ 1/85	21 20.0	0.058
1/ 1/85	21 30.0	0.058
1/ 1/85	21 40.0	0.078
1/ 1/85	21 50.0	0.079
1/ 1/85	21 60.0	0.079
1/ 1/85	22 10.0	0.079
1/ 1/85	22 20.0	0.079
1/ 1/85	22 30.0	0.079
1/ 1/85	22 40.0	0.106
1/ 1/85	22 50.0	0.105

1/ 1/85	22 60.0	0.105
1/ 1/85	23 10.0	0.105
1/ 1/85	23 20.0	0.105
1/ 1/85	23 30.0	0.105
1/ 1/85	23 40.0	0.176
1/ 1/85	23 50.0	0.167
1/ 1/85	23 60.0	0.169
1/ 2/85	0 10.0	0.168
1/ 2/85	0 20.0	0.168
1/ 2/85	0 30.0	0.168
1/ 2/85	0 40.0	0.475
1/ 2/85	0 50.0	0.377
1/ 2/85	0 60.0	0.408
1/ 2/85	1 10.0	0.397
1/ 2/85	1 20.0	0.401
1/ 2/85	1 30.0	0.400
1/ 2/85	1 40.0	0.137
1/ 2/85	1 50.0	0.174
1/ 2/85	1 60.0	0.167
1/ 2/85	2 10.0	0.169
1/ 2/85	2 20.0	0.168
1/ 2/85	2 30.0	0.168
1/ 2/85	2 40.0	0.102
1/ 2/85	2 50.0	0.106
1/ 2/85	2 60.0	0.105
1/ 2/85	3 10.0	0.105
1/ 2/85	3 20.0	0.105
1/ 2/85	3 30.0	0.105

1

MAIN SYSTEM M1

1 YR. DESIGN STORM

SUMMARY OF QUANTITY RESULTS (INFLOW IN CFS) AT LOCATION 20

DATE MO/DA/YR	TIME HR:MIN	FLOW CFS
1/ 2/85	3 40.0	0.079
1/ 2/85	3 50.0	0.079
1/ 2/85	3 60.0	0.079
1/ 2/85	4 10.0	0.079
1/ 2/85	4 20.0	0.079
1/ 2/85	4 30.0	0.079
1/ 2/85	4 40.0	0.059
1/ 2/85	4 50.0	0.058
1/ 2/85	4 60.0	0.058
1/ 2/85	5 10.0	0.058
1/ 2/85	5 20.0	0.058
1/ 2/85	5 30.0	0.058
1/ 2/85	5 40.0	0.048

1/ 2/85	5 50.0	0.048
1/ 2/85	5 60.0	0.047
1/ 2/85	6 10.0	0.047
1/ 2/85	6 20.0	0.047
1/ 2/85	6 30.0	0.047
1/ 2/85	6 40.0	0.030
1/ 2/85	6 50.0	0.027
1/ 2/85	6 60.0	0.027
1/ 2/85	7 10.0	0.009
1/ 2/85	7 20.0	0.005
1/ 2/85	7 30.0	0.003
1/ 2/85	7 40.0	0.002
1/ 2/85	7 50.0	0.001
1/ 2/85	7 60.0	0.001
1/ 2/85	8 10.0	0.001
1/ 2/85	8 20.0	0.000
1/ 2/85	8 30.0	0.000
1/ 2/85	8 40.0	0.000
1/ 2/85	8 50.0	0.000
1/ 2/85	8 60.0	0.000
1/ 2/85	9 10.0	0.000
1/ 2/85	9 20.0	0.000
1/ 2/85	9 30.0	0.000
1/ 2/85	9 40.0	0.000
1/ 2/85	9 50.0	0.000
1/ 2/85	9 60.0	0.000
1/ 2/85	10 10.0	0.000
1/ 2/85	10 20.0	0.000
1/ 2/85	10 30.0	0.000
1/ 2/85	10 40.0	0.000
1/ 2/85	10 50.0	0.000
1/ 2/85	10 60.0	0.000
1/ 2/85	11 10.0	0.000
1/ 2/85	11 20.0	0.000
1/ 2/85	11 30.0	0.000
1/ 2/85	11 40.0	0.000
1/ 2/85	11 50.0	0.000

1

MAIN SYSTEM M1

1 YR. DESIGN STORM

SUMMARY OF QUANTITY RESULTS (INFLOW IN CFS) AT LOCATION 20

DATE MO/DA/YR	TIME HR:MIN	FLOW CFS
1/ 2/85	11 60.0	0.000
1/ 2/85	12 10.0	0.000
1/ 2/85	12 20.0	0.000
1/ 2/85	12 30.0	0.000

1/	2/85	12	40.0	0.000
1/	2/85	12	50.0	0.000
1/	2/85	12	60.0	0.000
1/	2/85	13	10.0	0.000
1/	2/85	13	20.0	0.000
1/	2/85	13	30.0	0.000
1/	2/85	13	40.0	0.000
1/	2/85	13	50.0	0.000
1/	2/85	13	60.0	0.000
1/	2/85	14	10.0	0.000
1/	2/85	14	20.0	0.000
1/	2/85	14	30.0	0.000
1/	2/85	14	40.0	0.000
1/	2/85	14	50.0	0.000
1/	2/85	14	60.0	0.000
1/	2/85	15	10.0	0.000
1/	2/85	15	20.0	0.000
1/	2/85	15	30.0	0.000
1/	2/85	15	40.0	0.000
1/	2/85	15	50.0	0.000
1/	2/85	15	60.0	0.000
1/	2/85	16	10.0	0.000
1/	2/85	16	20.0	0.000
1/	2/85	16	30.0	0.000
1/	2/85	16	40.0	0.000
1/	2/85	16	50.0	0.000
1/	2/85	16	60.0	0.000
1/	2/85	17	10.0	0.000
1/	2/85	17	20.0	0.000
1/	2/85	17	30.0	0.000
1/	2/85	17	40.0	0.000
1/	2/85	17	50.0	0.000
1/	2/85	17	60.0	0.000
1/	2/85	18	10.0	0.000
1/	2/85	18	20.0	0.000
1/	2/85	18	30.0	0.000
1/	2/85	18	40.0	0.000
1/	2/85	18	50.0	0.000
1/	2/85	18	60.0	0.000
1/	2/85	19	10.0	0.000
1/	2/85	19	20.0	0.000
1/	2/85	19	30.0	0.000
1/	2/85	19	40.0	0.000
1/	2/85	19	50.0	0.000
1/	2/85	19	60.0	0.000

FLOW WT'D MEANS
+ 0.053

FLOW WT'D STD-DEVS
+ 1.271

TOTAL LOADS
+ 4771.037
CUB-FT
1
MAIN SYSTEM M1

1 YR. DESIGN STORM

SUMMARY OF QUANTITY RESULTS (INFLOW IN CFS) AT LOCATION 79

DATE MO/DA/YR	TIME HR:MIN	FLOW CFS
1/ 1/85	19 10.0	0.005
1/ 1/85	19 20.0	0.008
1/ 1/85	19 30.0	0.009
1/ 1/85	19 40.0	0.016
1/ 1/85	19 50.0	0.016
1/ 1/85	19 60.0	0.037
1/ 1/85	20 10.0	0.063
1/ 1/85	20 20.0	0.066
1/ 1/85	20 30.0	0.066
1/ 1/85	20 40.0	0.081
1/ 1/85	20 50.0	0.081
1/ 1/85	20 60.0	0.081
1/ 1/85	21 10.0	0.081
1/ 1/85	21 20.0	0.081
1/ 1/85	21 30.0	0.081
1/ 1/85	21 40.0	0.112
1/ 1/85	21 50.0	0.110
1/ 1/85	21 60.0	0.110
1/ 1/85	22 10.0	0.110
1/ 1/85	22 20.0	0.110
1/ 1/85	22 30.0	0.110
1/ 1/85	22 40.0	0.151
1/ 1/85	22 50.0	0.146
1/ 1/85	22 60.0	0.147
1/ 1/85	23 10.0	0.147
1/ 1/85	23 20.0	0.147
1/ 1/85	23 30.0	0.147
1/ 1/85	23 40.0	0.254
1/ 1/85	23 50.0	0.231
1/ 1/85	23 60.0	0.236
1/ 2/85	0 10.0	0.235
1/ 2/85	0 20.0	0.235
1/ 2/85	0 30.0	0.235
1/ 2/85	0 40.0	0.696
1/ 2/85	0 50.0	0.509
1/ 2/85	0 60.0	0.576
1/ 2/85	1 10.0	0.551
1/ 2/85	1 20.0	0.560

1/ 2/85	1 30.0	0.557
1/ 2/85	1 40.0	0.172
1/ 2/85	1 50.0	0.248
1/ 2/85	1 60.0	0.232
1/ 2/85	2 10.0	0.236
1/ 2/85	2 20.0	0.235
1/ 2/85	2 30.0	0.235
1/ 2/85	2 40.0	0.136
1/ 2/85	2 50.0	0.148
1/ 2/85	2 60.0	0.147
1/ 2/85	3 10.0	0.147
1/ 2/85	3 20.0	0.147
1/ 2/85	3 30.0	0.147

1

MAIN SYSTEM M1

1 YR. DESIGN STORM

SUMMARY OF QUANTITY RESULTS (INFLOW IN CFS) AT LOCATION 79

DATE MO/DA/YR	TIME HR:MIN	FLOW CFS
1/ 2/85	3 40.0	0.107
1/ 2/85	3 50.0	0.110
1/ 2/85	3 60.0	0.110
1/ 2/85	4 10.0	0.110
1/ 2/85	4 20.0	0.110
1/ 2/85	4 30.0	0.110
1/ 2/85	4 40.0	0.080
1/ 2/85	4 50.0	0.081
1/ 2/85	4 60.0	0.081
1/ 2/85	5 10.0	0.081
1/ 2/85	5 20.0	0.081
1/ 2/85	5 30.0	0.081
1/ 2/85	5 40.0	0.066
1/ 2/85	5 50.0	0.066
1/ 2/85	5 60.0	0.066
1/ 2/85	6 10.0	0.066
1/ 2/85	6 20.0	0.066
1/ 2/85	6 30.0	0.066
1/ 2/85	6 40.0	0.040
1/ 2/85	6 50.0	0.037
1/ 2/85	6 60.0	0.037
1/ 2/85	7 10.0	0.011
1/ 2/85	7 20.0	0.005
1/ 2/85	7 30.0	0.003
1/ 2/85	7 40.0	0.002
1/ 2/85	7 50.0	0.001
1/ 2/85	7 60.0	0.001
1/ 2/85	8 10.0	0.001

1/ 2/85	8 20.0	0.000
1/ 2/85	8 30.0	0.000
1/ 2/85	8 40.0	0.000
1/ 2/85	8 50.0	0.000
1/ 2/85	8 60.0	0.000
1/ 2/85	9 10.0	0.000
1/ 2/85	9 20.0	0.000
1/ 2/85	9 30.0	0.000
1/ 2/85	9 40.0	0.000
1/ 2/85	9 50.0	0.000
1/ 2/85	9 60.0	0.000
1/ 2/85	10 10.0	0.000
1/ 2/85	10 20.0	0.000
1/ 2/85	10 30.0	0.000
1/ 2/85	10 40.0	0.000
1/ 2/85	10 50.0	0.000
1/ 2/85	10 60.0	0.000
1/ 2/85	11 10.0	0.000
1/ 2/85	11 20.0	0.000
1/ 2/85	11 30.0	0.000
1/ 2/85	11 40.0	0.000
1/ 2/85	11 50.0	0.000

1

MAIN SYSTEM M1

1 YR. DESIGN STORM

SUMMARY OF QUANTITY RESULTS (INFLOW IN CFS) AT LOCATION 79

DATE MO/DA/YR	TIME HR:MIN	FLOW CFS
1/ 2/85	11 60.0	0.000
1/ 2/85	12 10.0	0.000
1/ 2/85	12 20.0	0.000
1/ 2/85	12 30.0	0.000
1/ 2/85	12 40.0	0.000
1/ 2/85	12 50.0	0.000
1/ 2/85	12 60.0	0.000
1/ 2/85	13 10.0	0.000
1/ 2/85	13 20.0	0.000
1/ 2/85	13 30.0	0.000
1/ 2/85	13 40.0	0.000
1/ 2/85	13 50.0	0.000
1/ 2/85	13 60.0	0.000
1/ 2/85	14 10.0	0.000
1/ 2/85	14 20.0	0.000
1/ 2/85	14 30.0	0.000
1/ 2/85	14 40.0	0.000
1/ 2/85	14 50.0	0.000
1/ 2/85	14 60.0	0.000

1/ 2/85	15	10.0	0.000
1/ 2/85	15	20.0	0.000
1/ 2/85	15	30.0	0.000
1/ 2/85	15	40.0	0.000
1/ 2/85	15	50.0	0.000
1/ 2/85	15	60.0	0.000
1/ 2/85	16	10.0	0.000
1/ 2/85	16	20.0	0.000
1/ 2/85	16	30.0	0.000
1/ 2/85	16	40.0	0.000
1/ 2/85	16	50.0	0.000
1/ 2/85	16	60.0	0.000
1/ 2/85	17	10.0	0.000
1/ 2/85	17	20.0	0.000
1/ 2/85	17	30.0	0.000
1/ 2/85	17	40.0	0.000
1/ 2/85	17	50.0	0.000
1/ 2/85	17	60.0	0.000
1/ 2/85	18	10.0	0.000
1/ 2/85	18	20.0	0.000
1/ 2/85	18	30.0	0.000
1/ 2/85	18	40.0	0.000
1/ 2/85	18	50.0	0.000
1/ 2/85	18	60.0	0.000
1/ 2/85	19	10.0	0.000
1/ 2/85	19	20.0	0.000
1/ 2/85	19	30.0	0.000
1/ 2/85	19	40.0	0.000
1/ 2/85	19	50.0	0.000
1/ 2/85	19	60.0	0.000

FLOW WT'D MEANS
+ 0.074

FLOW WT'D STD-DEVS
+ 1.781

TOTAL LOADS
+ 6660.329
CUB-FT
1
MAIN SYSTEM M1

1 YR. DESIGN STORM

SUMMARY OF QUANTITY RESULTS (INFLOW IN CFS) AT LOCATION 73

DATE MO/DA/YR	TIME HR:MIN	FLOW CFS
1/ 1/85	19 10.0	0.003

1/	1/85	19	20.0	0.007
1/	1/85	19	30.0	0.009
1/	1/85	19	40.0	0.015
1/	1/85	19	50.0	0.018
1/	1/85	19	60.0	0.030
1/	1/85	20	10.0	0.057
1/	1/85	20	20.0	0.069
1/	1/85	20	30.0	0.072
1/	1/85	20	40.0	0.086
1/	1/85	20	50.0	0.089
1/	1/85	20	60.0	0.089
1/	1/85	21	10.0	0.089
1/	1/85	21	20.0	0.089
1/	1/85	21	30.0	0.089
1/	1/85	21	40.0	0.116
1/	1/85	21	50.0	0.121
1/	1/85	21	60.0	0.122
1/	1/85	22	10.0	0.122
1/	1/85	22	20.0	0.122
1/	1/85	22	30.0	0.122
1/	1/85	22	40.0	0.158
1/	1/85	22	50.0	0.162
1/	1/85	22	60.0	0.163
1/	1/85	23	10.0	0.163
1/	1/85	23	20.0	0.163
1/	1/85	23	30.0	0.163
1/	1/85	23	40.0	0.259
1/	1/85	23	50.0	0.260
1/	1/85	23	60.0	0.260
1/	2/85	0	10.0	0.260
1/	2/85	0	20.0	0.260
1/	2/85	0	30.0	0.260
1/	2/85	0	40.0	0.681
1/	2/85	0	50.0	0.606
1/	2/85	0	60.0	0.620
1/	2/85	1	10.0	0.617
1/	2/85	1	20.0	0.618
1/	2/85	1	30.0	0.618
1/	2/85	1	40.0	0.243
1/	2/85	1	50.0	0.260
1/	2/85	1	60.0	0.260
1/	2/85	2	10.0	0.260
1/	2/85	2	20.0	0.260
1/	2/85	2	30.0	0.260
1/	2/85	2	40.0	0.168
1/	2/85	2	50.0	0.163
1/	2/85	2	60.0	0.163
1/	2/85	3	10.0	0.163
1/	2/85	3	20.0	0.163
1/	2/85	3	30.0	0.163

1

MAIN SYSTEM M1

1 YR. DESIGN STORM

SUMMARY OF QUANTITY RESULTS (INFLOW IN CFS) AT LOCATION 73

DATE MO/DA/YR	TIME HR:MIN	FLOW CFS
1/ 2/85	3 40.0	0.127
1/ 2/85	3 50.0	0.123
1/ 2/85	3 60.0	0.122
1/ 2/85	4 10.0	0.122
1/ 2/85	4 20.0	0.122
1/ 2/85	4 30.0	0.122
1/ 2/85	4 40.0	0.095
1/ 2/85	4 50.0	0.091
1/ 2/85	4 60.0	0.090
1/ 2/85	5 10.0	0.089
1/ 2/85	5 20.0	0.089
1/ 2/85	5 30.0	0.089
1/ 2/85	5 40.0	0.077
1/ 2/85	5 50.0	0.074
1/ 2/85	5 60.0	0.073
1/ 2/85	6 10.0	0.073
1/ 2/85	6 20.0	0.073
1/ 2/85	6 30.0	0.073
1/ 2/85	6 40.0	0.050
1/ 2/85	6 50.0	0.044
1/ 2/85	6 60.0	0.042
1/ 2/85	7 10.0	0.018
1/ 2/85	7 20.0	0.009
1/ 2/85	7 30.0	0.006
1/ 2/85	7 40.0	0.004
1/ 2/85	7 50.0	0.003
1/ 2/85	7 60.0	0.002
1/ 2/85	8 10.0	0.001
1/ 2/85	8 20.0	0.001
1/ 2/85	8 30.0	0.001
1/ 2/85	8 40.0	0.001
1/ 2/85	8 50.0	0.001
1/ 2/85	8 60.0	0.001
1/ 2/85	9 10.0	0.000
1/ 2/85	9 20.0	0.000
1/ 2/85	9 30.0	0.000
1/ 2/85	9 40.0	0.000
1/ 2/85	9 50.0	0.000
1/ 2/85	9 60.0	0.000
1/ 2/85	10 10.0	0.000
1/ 2/85	10 20.0	0.000
1/ 2/85	10 30.0	0.000
1/ 2/85	10 40.0	0.000

1/ 2/85	10 50.0	0.000
1/ 2/85	10 60.0	0.000
1/ 2/85	11 10.0	0.000
1/ 2/85	11 20.0	0.000
1/ 2/85	11 30.0	0.000
1/ 2/85	11 40.0	0.000
1/ 2/85	11 50.0	0.000

1

MAIN SYSTEM M1

1 YR. DESIGN STORM

SUMMARY OF QUANTITY RESULTS (INFLOW IN CFS) AT LOCATION 73

DATE MO/DA/YR	TIME HR:MIN	FLOW CFS
1/ 2/85	11 60.0	0.000
1/ 2/85	12 10.0	0.000
1/ 2/85	12 20.0	0.000
1/ 2/85	12 30.0	0.000
1/ 2/85	12 40.0	0.000
1/ 2/85	12 50.0	0.000
1/ 2/85	12 60.0	0.000
1/ 2/85	13 10.0	0.000
1/ 2/85	13 20.0	0.000
1/ 2/85	13 30.0	0.000
1/ 2/85	13 40.0	0.000
1/ 2/85	13 50.0	0.000
1/ 2/85	13 60.0	0.000
1/ 2/85	14 10.0	0.000
1/ 2/85	14 20.0	0.000
1/ 2/85	14 30.0	0.000
1/ 2/85	14 40.0	0.000
1/ 2/85	14 50.0	0.000
1/ 2/85	14 60.0	0.000
1/ 2/85	15 10.0	0.000
1/ 2/85	15 20.0	0.000
1/ 2/85	15 30.0	0.000
1/ 2/85	15 40.0	0.000
1/ 2/85	15 50.0	0.000
1/ 2/85	15 60.0	0.000
1/ 2/85	16 10.0	0.000
1/ 2/85	16 20.0	0.000
1/ 2/85	16 30.0	0.000
1/ 2/85	16 40.0	0.000
1/ 2/85	16 50.0	0.000
1/ 2/85	16 60.0	0.000
1/ 2/85	17 10.0	0.000
1/ 2/85	17 20.0	0.000
1/ 2/85	17 30.0	0.000

1/ 2/85	17 40.0	0.000
1/ 2/85	17 50.0	0.000
1/ 2/85	17 60.0	0.000
1/ 2/85	18 10.0	0.000
1/ 2/85	18 20.0	0.000
1/ 2/85	18 30.0	0.000
1/ 2/85	18 40.0	0.000
1/ 2/85	18 50.0	0.000
1/ 2/85	18 60.0	0.000
1/ 2/85	19 10.0	0.000
1/ 2/85	19 20.0	0.000
1/ 2/85	19 30.0	0.000
1/ 2/85	19 40.0	0.000
1/ 2/85	19 50.0	0.000
1/ 2/85	19 60.0	0.000

FLOW WT'D MEANS
+ 0.082

FLOW WT'D STD-DEVS
+ 1.950

TOTAL LOADS
+ 7356.767
CUB-FT
1
MAIN SYSTEM M1

1 YR. DESIGN STORM

SUMMARY OF QUANTITY RESULTS (INFLOW IN CFS) AT LOCATION 71

DATE MO/DA/YR	TIME HR:MIN	FLOW CFS
1/ 1/85	19 10.0	0.005
1/ 1/85	19 20.0	0.009
1/ 1/85	19 30.0	0.011
1/ 1/85	19 40.0	0.018
1/ 1/85	19 50.0	0.020
1/ 1/85	19 60.0	0.040
1/ 1/85	20 10.0	0.072
1/ 1/85	20 20.0	0.079
1/ 1/85	20 30.0	0.079
1/ 1/85	20 40.0	0.096
1/ 1/85	20 50.0	0.097
1/ 1/85	20 60.0	0.097
1/ 1/85	21 10.0	0.097
1/ 1/85	21 20.0	0.097
1/ 1/85	21 30.0	0.097
1/ 1/85	21 40.0	0.132

1/ 1/85	21	50.0	0.132
1/ 1/85	21	60.0	0.132
1/ 1/85	22	10.0	0.132
1/ 1/85	22	20.0	0.132
1/ 1/85	22	30.0	0.132
1/ 1/85	22	40.0	0.178
1/ 1/85	22	50.0	0.176
1/ 1/85	22	60.0	0.176
1/ 1/85	23	10.0	0.176
1/ 1/85	23	20.0	0.176
1/ 1/85	23	30.0	0.176
1/ 1/85	23	40.0	0.297
1/ 1/85	23	50.0	0.280
1/ 1/85	23	60.0	0.282
1/ 2/85	0	10.0	0.282
1/ 2/85	0	20.0	0.282
1/ 2/85	0	30.0	0.282
1/ 2/85	0	40.0	0.806
1/ 2/85	0	50.0	0.628
1/ 2/85	0	60.0	0.683
1/ 2/85	1	10.0	0.666
1/ 2/85	1	20.0	0.671
1/ 2/85	1	30.0	0.669
1/ 2/85	1	40.0	0.223
1/ 2/85	1	50.0	0.291
1/ 2/85	1	60.0	0.281
1/ 2/85	2	10.0	0.282
1/ 2/85	2	20.0	0.282
1/ 2/85	2	30.0	0.282
1/ 2/85	2	40.0	0.169
1/ 2/85	2	50.0	0.177
1/ 2/85	2	60.0	0.176
1/ 2/85	3	10.0	0.176
1/ 2/85	3	20.0	0.176
1/ 2/85	3	30.0	0.176

1

MAIN SYSTEM M1

1 YR. DESIGN STORM

SUMMARY OF QUANTITY RESULTS (INFLOW IN CFS) AT LOCATION 71

DATE MO/DA/YR	TIME HR:MIN	FLOW CFS
1/ 2/85	3 40.0	0.132
1/ 2/85	3 50.0	0.132
1/ 2/85	3 60.0	0.132
1/ 2/85	4 10.0	0.132
1/ 2/85	4 20.0	0.132
1/ 2/85	4 30.0	0.132

1/ 2/85	4	40.0	0.098
1/ 2/85	4	50.0	0.097
1/ 2/85	4	60.0	0.097
1/ 2/85	5	10.0	0.097
1/ 2/85	5	20.0	0.097
1/ 2/85	5	30.0	0.097
1/ 2/85	5	40.0	0.081
1/ 2/85	5	50.0	0.079
1/ 2/85	5	60.0	0.079
1/ 2/85	6	10.0	0.079
1/ 2/85	6	20.0	0.079
1/ 2/85	6	30.0	0.079
1/ 2/85	6	40.0	0.050
1/ 2/85	6	50.0	0.045
1/ 2/85	6	60.0	0.044
1/ 2/85	7	10.0	0.015
1/ 2/85	7	20.0	0.007
1/ 2/85	7	30.0	0.004
1/ 2/85	7	40.0	0.003
1/ 2/85	7	50.0	0.002
1/ 2/85	7	60.0	0.001
1/ 2/85	8	10.0	0.001
1/ 2/85	8	20.0	0.001
1/ 2/85	8	30.0	0.001
1/ 2/85	8	40.0	0.000
1/ 2/85	8	50.0	0.000
1/ 2/85	8	60.0	0.000
1/ 2/85	9	10.0	0.000
1/ 2/85	9	20.0	0.000
1/ 2/85	9	30.0	0.000
1/ 2/85	9	40.0	0.000
1/ 2/85	9	50.0	0.000
1/ 2/85	9	60.0	0.000
1/ 2/85	10	10.0	0.000
1/ 2/85	10	20.0	0.000
1/ 2/85	10	30.0	0.000
1/ 2/85	10	40.0	0.000
1/ 2/85	10	50.0	0.000
1/ 2/85	10	60.0	0.000
1/ 2/85	11	10.0	0.000
1/ 2/85	11	20.0	0.000
1/ 2/85	11	30.0	0.000
1/ 2/85	11	40.0	0.000
1/ 2/85	11	50.0	0.000

1

MAIN SYSTEM M1

1 YR. DESIGN STORM

SUMMARY OF QUANTITY RESULTS (INFLOW IN CFS) AT LOCATION 71

DATE MO/DA/YR	TIME HR:MIN	FLOW CFS
1/ 2/85	11 60.0	0.000
1/ 2/85	12 10.0	0.000
1/ 2/85	12 20.0	0.000
1/ 2/85	12 30.0	0.000
1/ 2/85	12 40.0	0.000
1/ 2/85	12 50.0	0.000
1/ 2/85	12 60.0	0.000
1/ 2/85	13 10.0	0.000
1/ 2/85	13 20.0	0.000
1/ 2/85	13 30.0	0.000
1/ 2/85	13 40.0	0.000
1/ 2/85	13 50.0	0.000
1/ 2/85	13 60.0	0.000
1/ 2/85	14 10.0	0.000
1/ 2/85	14 20.0	0.000
1/ 2/85	14 30.0	0.000
1/ 2/85	14 40.0	0.000
1/ 2/85	14 50.0	0.000
1/ 2/85	14 60.0	0.000
1/ 2/85	15 10.0	0.000
1/ 2/85	15 20.0	0.000
1/ 2/85	15 30.0	0.000
1/ 2/85	15 40.0	0.000
1/ 2/85	15 50.0	0.000
1/ 2/85	15 60.0	0.000
1/ 2/85	16 10.0	0.000
1/ 2/85	16 20.0	0.000
1/ 2/85	16 30.0	0.000
1/ 2/85	16 40.0	0.000
1/ 2/85	16 50.0	0.000
1/ 2/85	16 60.0	0.000
1/ 2/85	17 10.0	0.000
1/ 2/85	17 20.0	0.000
1/ 2/85	17 30.0	0.000
1/ 2/85	17 40.0	0.000
1/ 2/85	17 50.0	0.000
1/ 2/85	17 60.0	0.000
1/ 2/85	18 10.0	0.000
1/ 2/85	18 20.0	0.000
1/ 2/85	18 30.0	0.000
1/ 2/85	18 40.0	0.000
1/ 2/85	18 50.0	0.000
1/ 2/85	18 60.0	0.000
1/ 2/85	19 10.0	0.000
1/ 2/85	19 20.0	0.000
1/ 2/85	19 30.0	0.000
1/ 2/85	19 40.0	0.000
1/ 2/85	19 50.0	0.000
1/ 2/85	19 60.0	0.000

FLOW WT'D MEANS
+ 0.089

FLOW WT'D STD-DEVS
+ 2.131

TOTAL LOADS
+ 7989.498
CUB-FT
1
MAIN SYSTEM M1

1 YR. DESIGN STORM

SUMMARY OF QUANTITY RESULTS (INFLOW IN CFS) AT LOCATION 83

DATE MO/DA/YR	TIME HR:MIN	FLOW CFS
1/ 1/85	19 10.0	0.009
1/ 1/85	19 20.0	0.010
1/ 1/85	19 30.0	0.010
1/ 1/85	19 40.0	0.019
1/ 1/85	19 50.0	0.017
1/ 1/85	19 60.0	0.061
1/ 1/85	20 10.0	0.071
1/ 1/85	20 20.0	0.069
1/ 1/85	20 30.0	0.070
1/ 1/85	20 40.0	0.089
1/ 1/85	20 50.0	0.084
1/ 1/85	20 60.0	0.085
1/ 1/85	21 10.0	0.085
1/ 1/85	21 20.0	0.085
1/ 1/85	21 30.0	0.085
1/ 1/85	21 40.0	0.125
1/ 1/85	21 50.0	0.114
1/ 1/85	21 60.0	0.117
1/ 1/85	22 10.0	0.116
1/ 1/85	22 20.0	0.116
1/ 1/85	22 30.0	0.116
1/ 1/85	22 40.0	0.168
1/ 1/85	22 50.0	0.151
1/ 1/85	22 60.0	0.156
1/ 1/85	23 10.0	0.154
1/ 1/85	23 20.0	0.155
1/ 1/85	23 30.0	0.155
1/ 1/85	23 40.0	0.289
1/ 1/85	23 50.0	0.232
1/ 1/85	23 60.0	0.254
1/ 2/85	0 10.0	0.245

1/ 2/85	0 20.0	0.249
1/ 2/85	0 30.0	0.247
1/ 2/85	0 40.0	0.813
1/ 2/85	0 50.0	0.479
1/ 2/85	0 60.0	0.651
1/ 2/85	1 10.0	0.556
1/ 2/85	1 20.0	0.606
1/ 2/85	1 30.0	0.579
1/ 2/85	1 40.0	0.142
1/ 2/85	1 50.0	0.296
1/ 2/85	1 60.0	0.229
1/ 2/85	2 10.0	0.255
1/ 2/85	2 20.0	0.245
1/ 2/85	2 30.0	0.249
1/ 2/85	2 40.0	0.127
1/ 2/85	2 50.0	0.164
1/ 2/85	2 60.0	0.152
1/ 2/85	3 10.0	0.156
1/ 2/85	3 20.0	0.155
1/ 2/85	3 30.0	0.155

1

MAIN SYSTEM M1

1 YR. DESIGN STORM

SUMMARY OF QUANTITY RESULTS (INFLOW IN CFS) AT LOCATION 83

DATE MO/DA/YR	TIME HR:MIN	FLOW CFS
1/ 2/85	3 40.0	0.106
1/ 2/85	3 50.0	0.119
1/ 2/85	3 60.0	0.115
1/ 2/85	4 10.0	0.116
1/ 2/85	4 20.0	0.116
1/ 2/85	4 30.0	0.116
1/ 2/85	4 40.0	0.079
1/ 2/85	4 50.0	0.087
1/ 2/85	4 60.0	0.085
1/ 2/85	5 10.0	0.085
1/ 2/85	5 20.0	0.085
1/ 2/85	5 30.0	0.085
1/ 2/85	5 40.0	0.067
1/ 2/85	5 50.0	0.070
1/ 2/85	5 60.0	0.070
1/ 2/85	6 10.0	0.070
1/ 2/85	6 20.0	0.070
1/ 2/85	6 30.0	0.070
1/ 2/85	6 40.0	0.036
1/ 2/85	6 50.0	0.039
1/ 2/85	6 60.0	0.039

1/ 2/85	7	10.0	0.006
1/ 2/85	7	20.0	0.002
1/ 2/85	7	30.0	0.001
1/ 2/85	7	40.0	0.001
1/ 2/85	7	50.0	0.000
1/ 2/85	7	60.0	0.000
1/ 2/85	8	10.0	0.000
1/ 2/85	8	20.0	0.000
1/ 2/85	8	30.0	0.000
1/ 2/85	8	40.0	0.000
1/ 2/85	8	50.0	0.000
1/ 2/85	8	60.0	0.000
1/ 2/85	9	10.0	0.000
1/ 2/85	9	20.0	0.000
1/ 2/85	9	30.0	0.000
1/ 2/85	9	40.0	0.000
1/ 2/85	9	50.0	0.000
1/ 2/85	9	60.0	0.000
1/ 2/85	10	10.0	0.000
1/ 2/85	10	20.0	0.000
1/ 2/85	10	30.0	0.000
1/ 2/85	10	40.0	0.000
1/ 2/85	10	50.0	0.000
1/ 2/85	10	60.0	0.000
1/ 2/85	11	10.0	0.000
1/ 2/85	11	20.0	0.000
1/ 2/85	11	30.0	0.000
1/ 2/85	11	40.0	0.000
1/ 2/85	11	50.0	0.000

1

MAIN SYSTEM M1

1 YR. DESIGN STORM

SUMMARY OF QUANTITY RESULTS (INFLOW IN CFS) AT LOCATION 83

DATE MO/DA/YR	TIME HR:MIN		FLOW CFS
1/ 2/85	11	60.0	0.000
1/ 2/85	12	10.0	0.000
1/ 2/85	12	20.0	0.000
1/ 2/85	12	30.0	0.000
1/ 2/85	12	40.0	0.000
1/ 2/85	12	50.0	0.000
1/ 2/85	12	60.0	0.000
1/ 2/85	13	10.0	0.000
1/ 2/85	13	20.0	0.000
1/ 2/85	13	30.0	0.000
1/ 2/85	13	40.0	0.000
1/ 2/85	13	50.0	0.000

```
  1/ 2/85  13 60.0     0.000
  1/ 2/85  14 10.0     0.000
  1/ 2/85  14 20.0     0.000
  1/ 2/85  14 30.0     0.000
  1/ 2/85  14 40.0     0.000
  1/ 2/85  14 50.0     0.000
  1/ 2/85  14 60.0     0.000
  1/ 2/85  15 10.0     0.000
  1/ 2/85  15 20.0     0.000
  1/ 2/85  15 30.0     0.000
  1/ 2/85  15 40.0     0.000
  1/ 2/85  15 50.0     0.000
  1/ 2/85  15 60.0     0.000
  1/ 2/85  16 10.0     0.000
  1/ 2/85  16 20.0     0.000
  1/ 2/85  16 30.0     0.000
  1/ 2/85  16 40.0     0.000
  1/ 2/85  16 50.0     0.000
  1/ 2/85  16 60.0     0.000
  1/ 2/85  17 10.0     0.000
  1/ 2/85  17 20.0     0.000
  1/ 2/85  17 30.0     0.000
  1/ 2/85  17 40.0     0.000
  1/ 2/85  17 50.0     0.000
  1/ 2/85  17 60.0     0.000
  1/ 2/85  18 10.0     0.000
  1/ 2/85  18 20.0     0.000
  1/ 2/85  18 30.0     0.000
  1/ 2/85  18 40.0     0.000
  1/ 2/85  18 50.0     0.000
  1/ 2/85  18 60.0     0.000
  1/ 2/85  19 10.0     0.000
  1/ 2/85  19 20.0     0.000
  1/ 2/85  19 30.0     0.000
  1/ 2/85  19 40.0     0.000
  1/ 2/85  19 50.0     0.000
  1/ 2/85  19 60.0     0.000

 FLOW WT'D MEANS
+                 0.078

 FLOW WT'D STD-DEVS
+                 1.907

 TOTAL LOADS
+               7052.711
                 CUB-FT
1
   MAIN SYSTEM M1

                    1 YR. DESIGN STORM
```

SUMMARY OF QUANTITY RESULTS (INFLOW IN CFS) AT LOCATION 67

DATE MO/DA/YR	TIME HR:MIN	FLOW CFS
1/ 1/85	19 10.0	0.003
1/ 1/85	19 20.0	0.003
1/ 1/85	19 30.0	0.003
1/ 1/85	19 40.0	0.006
1/ 1/85	19 50.0	0.006
1/ 1/85	19 60.0	0.023
1/ 1/85	20 10.0	0.023
1/ 1/85	20 20.0	0.023
1/ 1/85	20 30.0	0.023
1/ 1/85	20 40.0	0.029
1/ 1/85	20 50.0	0.027
1/ 1/85	20 60.0	0.028
1/ 1/85	21 10.0	0.028
1/ 1/85	21 20.0	0.028
1/ 1/85	21 30.0	0.028
1/ 1/85	21 40.0	0.041
1/ 1/85	21 50.0	0.037
1/ 1/85	21 60.0	0.038
1/ 1/85	22 10.0	0.038
1/ 1/85	22 20.0	0.038
1/ 1/85	22 30.0	0.038
1/ 1/85	22 40.0	0.055
1/ 1/85	22 50.0	0.049
1/ 1/85	22 60.0	0.051
1/ 1/85	23 10.0	0.050
1/ 1/85	23 20.0	0.051
1/ 1/85	23 30.0	0.050
1/ 1/85	23 40.0	0.096
1/ 1/85	23 50.0	0.074
1/ 1/85	23 60.0	0.084
1/ 2/85	0 10.0	0.079
1/ 2/85	0 20.0	0.081
1/ 2/85	0 30.0	0.080
1/ 2/85	0 40.0	0.271
1/ 2/85	0 50.0	0.150
1/ 2/85	0 60.0	0.217
1/ 2/85	1 10.0	0.177
1/ 2/85	1 20.0	0.200
1/ 2/85	1 30.0	0.187
1/ 2/85	1 40.0	0.043
1/ 2/85	1 50.0	0.100
1/ 2/85	1 60.0	0.072
1/ 2/85	2 10.0	0.085
1/ 2/85	2 20.0	0.079
1/ 2/85	2 30.0	0.081
1/ 2/85	2 40.0	0.040

1/ 2/85	2 50.0	0.055
1/ 2/85	2 60.0	0.049
1/ 2/85	3 10.0	0.051
1/ 2/85	3 20.0	0.050
1/ 2/85	3 30.0	0.051

1

MAIN SYSTEM M1

1 YR. DESIGN STORM

SUMMARY OF QUANTITY RESULTS (INFLOW IN CFS) AT LOCATION 67

DATE MO/DA/YR	TIME HR:MIN	FLOW CFS
1/ 2/85	3 40.0	0.034
1/ 2/85	3 50.0	0.039
1/ 2/85	3 60.0	0.037
1/ 2/85	4 10.0	0.038
1/ 2/85	4 20.0	0.038
1/ 2/85	4 30.0	0.038
1/ 2/85	4 40.0	0.025
1/ 2/85	4 50.0	0.028
1/ 2/85	4 60.0	0.028
1/ 2/85	5 10.0	0.028
1/ 2/85	5 20.0	0.028
1/ 2/85	5 30.0	0.028
1/ 2/85	5 40.0	0.022
1/ 2/85	5 50.0	0.023
1/ 2/85	5 60.0	0.023
1/ 2/85	6 10.0	0.023
1/ 2/85	6 20.0	0.023
1/ 2/85	6 30.0	0.023
1/ 2/85	6 40.0	0.011
1/ 2/85	6 50.0	0.013
1/ 2/85	6 60.0	0.013
1/ 2/85	7 10.0	0.001
1/ 2/85	7 20.0	0.001
1/ 2/85	7 30.0	0.000
1/ 2/85	7 40.0	0.000
1/ 2/85	7 50.0	0.000
1/ 2/85	7 60.0	0.000
1/ 2/85	8 10.0	0.000
1/ 2/85	8 20.0	0.000
1/ 2/85	8 30.0	0.000
1/ 2/85	8 40.0	0.000
1/ 2/85	8 50.0	0.000
1/ 2/85	8 60.0	0.000
1/ 2/85	9 10.0	0.000
1/ 2/85	9 20.0	0.000
1/ 2/85	9 30.0	0.000

1/ 2/85	9 40.0	0.000
1/ 2/85	9 50.0	0.000
1/ 2/85	9 60.0	0.000
1/ 2/85	10 10.0	0.000
1/ 2/85	10 20.0	0.000
1/ 2/85	10 30.0	0.000
1/ 2/85	10 40.0	0.000
1/ 2/85	10 50.0	0.000
1/ 2/85	10 60.0	0.000
1/ 2/85	11 10.0	0.000
1/ 2/85	11 20.0	0.000
1/ 2/85	11 30.0	0.000
1/ 2/85	11 40.0	0.000
1/ 2/85	11 50.0	0.000

1

MAIN SYSTEM M1

1 YR. DESIGN STORM

SUMMARY OF QUANTITY RESULTS (INFLOW IN CFS) AT LOCATION 67

DATE MO/DA/YR	TIME HR:MIN	FLOW CFS
1/ 2/85	11 60.0	0.000
1/ 2/85	12 10.0	0.000
1/ 2/85	12 20.0	0.000
1/ 2/85	12 30.0	0.000
1/ 2/85	12 40.0	0.000
1/ 2/85	12 50.0	0.000
1/ 2/85	12 60.0	0.000
1/ 2/85	13 10.0	0.000
1/ 2/85	13 20.0	0.000
1/ 2/85	13 30.0	0.000
1/ 2/85	13 40.0	0.000
1/ 2/85	13 50.0	0.000
1/ 2/85	13 60.0	0.000
1/ 2/85	14 10.0	0.000
1/ 2/85	14 20.0	0.000
1/ 2/85	14 30.0	0.000
1/ 2/85	14 40.0	0.000
1/ 2/85	14 50.0	0.000
1/ 2/85	14 60.0	0.000
1/ 2/85	15 10.0	0.000
1/ 2/85	15 20.0	0.000
1/ 2/85	15 30.0	0.000
1/ 2/85	15 40.0	0.000
1/ 2/85	15 50.0	0.000
1/ 2/85	15 60.0	0.000
1/ 2/85	16 10.0	0.000
1/ 2/85	16 20.0	0.000

1/ 2/85	16 30.0	0.000
1/ 2/85	16 40.0	0.000
1/ 2/85	16 50.0	0.000
1/ 2/85	16 60.0	0.000
1/ 2/85	17 10.0	0.000
1/ 2/85	17 20.0	0.000
1/ 2/85	17 30.0	0.000
1/ 2/85	17 40.0	0.000
1/ 2/85	17 50.0	0.000
1/ 2/85	17 60.0	0.000
1/ 2/85	18 10.0	0.000
1/ 2/85	18 20.0	0.000
1/ 2/85	18 30.0	0.000
1/ 2/85	18 40.0	0.000
1/ 2/85	18 50.0	0.000
1/ 2/85	18 60.0	0.000
1/ 2/85	19 10.0	0.000
1/ 2/85	19 20.0	0.000
1/ 2/85	19 30.0	0.000
1/ 2/85	19 40.0	0.000
1/ 2/85	19 50.0	0.000
1/ 2/85	19 60.0	0.000

FLOW WT'D MEANS
+ 0.026

FLOW WT'D STD-DEVS
+ 0.624

TOTAL LOADS
+ 2299.236
CUB-FT
1
MAIN SYSTEM M1

1 YR. DESIGN STORM

SUMMARY OF QUANTITY RESULTS (INFLOW IN CFS) AT LOCATION 65

DATE MO/DA/YR	TIME HR:MIN	FLOW CFS
1/ 1/85	19 10.0	0.006
1/ 1/85	19 20.0	0.010
1/ 1/85	19 30.0	0.011
1/ 1/85	19 40.0	0.020
1/ 1/85	19 50.0	0.021
1/ 1/85	19 60.0	0.042
1/ 1/85	20 10.0	0.078
1/ 1/85	20 20.0	0.085
1/ 1/85	20 30.0	0.086

1/ 1/85	20	40.0	0.103
1/ 1/85	20	50.0	0.105
1/ 1/85	20	60.0	0.105
1/ 1/85	21	10.0	0.105
1/ 1/85	21	20.0	0.105
1/ 1/85	21	30.0	0.105
1/ 1/85	21	40.0	0.142
1/ 1/85	21	50.0	0.143
1/ 1/85	21	60.0	0.143
1/ 1/85	22	10.0	0.143
1/ 1/85	22	20.0	0.143
1/ 1/85	22	30.0	0.143
1/ 1/85	22	40.0	0.192
1/ 1/85	22	50.0	0.190
1/ 1/85	22	60.0	0.191
1/ 1/85	23	10.0	0.191
1/ 1/85	23	20.0	0.191
1/ 1/85	23	30.0	0.191
1/ 1/85	23	40.0	0.321
1/ 1/85	23	50.0	0.303
1/ 1/85	23	60.0	0.305
1/ 2/85	0	10.0	0.305
1/ 2/85	0	20.0	0.305
1/ 2/85	0	30.0	0.305
1/ 2/85	0	40.0	0.868
1/ 2/85	0	50.0	0.682
1/ 2/85	0	60.0	0.737
1/ 2/85	1	10.0	0.720
1/ 2/85	1	20.0	0.725
1/ 2/85	1	30.0	0.724
1/ 2/85	1	40.0	0.244
1/ 2/85	1	50.0	0.313
1/ 2/85	1	60.0	0.304
1/ 2/85	2	10.0	0.305
1/ 2/85	2	20.0	0.305
1/ 2/85	2	30.0	0.305
1/ 2/85	2	40.0	0.183
1/ 2/85	2	50.0	0.191
1/ 2/85	2	60.0	0.191
1/ 2/85	3	10.0	0.191
1/ 2/85	3	20.0	0.191
1/ 2/85	3	30.0	0.191

1

MAIN SYSTEM M1

1 YR. DESIGN STORM

SUMMARY OF QUANTITY RESULTS (INFLOW IN CFS) AT LOCATION 65

DATE TIME FLOW

MO/DA/YR	HR:MIN	CFS
1/ 2/85	3 40.0	0.143
1/ 2/85	3 50.0	0.143
1/ 2/85	3 60.0	0.143
1/ 2/85	4 10.0	0.143
1/ 2/85	4 20.0	0.143
1/ 2/85	4 30.0	0.143
1/ 2/85	4 40.0	0.107
1/ 2/85	4 50.0	0.105
1/ 2/85	4 60.0	0.105
1/ 2/85	5 10.0	0.105
1/ 2/85	5 20.0	0.105
1/ 2/85	5 30.0	0.105
1/ 2/85	5 40.0	0.088
1/ 2/85	5 50.0	0.086
1/ 2/85	5 60.0	0.086
1/ 2/85	6 10.0	0.086
1/ 2/85	6 20.0	0.086
1/ 2/85	6 30.0	0.086
1/ 2/85	6 40.0	0.054
1/ 2/85	6 50.0	0.049
1/ 2/85	6 60.0	0.048
1/ 2/85	7 10.0	0.016
1/ 2/85	7 20.0	0.008
1/ 2/85	7 30.0	0.004
1/ 2/85	7 40.0	0.003
1/ 2/85	7 50.0	0.002
1/ 2/85	7 60.0	0.001
1/ 2/85	8 10.0	0.001
1/ 2/85	8 20.0	0.001
1/ 2/85	8 30.0	0.001
1/ 2/85	8 40.0	0.001
1/ 2/85	8 50.0	0.000
1/ 2/85	8 60.0	0.000
1/ 2/85	9 10.0	0.000
1/ 2/85	9 20.0	0.000
1/ 2/85	9 30.0	0.000
1/ 2/85	9 40.0	0.000
1/ 2/85	9 50.0	0.000
1/ 2/85	9 60.0	0.000
1/ 2/85	10 10.0	0.000
1/ 2/85	10 20.0	0.000
1/ 2/85	10 30.0	0.000
1/ 2/85	10 40.0	0.000
1/ 2/85	10 50.0	0.000
1/ 2/85	10 60.0	0.000
1/ 2/85	11 10.0	0.000
1/ 2/85	11 20.0	0.000
1/ 2/85	11 30.0	0.000
1/ 2/85	11 40.0	0.000
1/ 2/85	11 50.0	0.000

MAIN SYSTEM M1

1 YR. DESIGN STORM

SUMMARY OF QUANTITY RESULTS (INFLOW IN CFS) AT LOCATION 65

DATE MO/DA/YR	TIME HR:MIN	FLOW CFS
1/ 2/85	11 60.0	0.000
1/ 2/85	12 10.0	0.000
1/ 2/85	12 20.0	0.000
1/ 2/85	12 30.0	0.000
1/ 2/85	12 40.0	0.000
1/ 2/85	12 50.0	0.000
1/ 2/85	12 60.0	0.000
1/ 2/85	13 10.0	0.000
1/ 2/85	13 20.0	0.000
1/ 2/85	13 30.0	0.000
1/ 2/85	13 40.0	0.000
1/ 2/85	13 50.0	0.000
1/ 2/85	13 60.0	0.000
1/ 2/85	14 10.0	0.000
1/ 2/85	14 20.0	0.000
1/ 2/85	14 30.0	0.000
1/ 2/85	14 40.0	0.000
1/ 2/85	14 50.0	0.000
1/ 2/85	14 60.0	0.000
1/ 2/85	15 10.0	0.000
1/ 2/85	15 20.0	0.000
1/ 2/85	15 30.0	0.000
1/ 2/85	15 40.0	0.000
1/ 2/85	15 50.0	0.000
1/ 2/85	15 60.0	0.000
1/ 2/85	16 10.0	0.000
1/ 2/85	16 20.0	0.000
1/ 2/85	16 30.0	0.000
1/ 2/85	16 40.0	0.000
1/ 2/85	16 50.0	0.000
1/ 2/85	16 60.0	0.000
1/ 2/85	17 10.0	0.000
1/ 2/85	17 20.0	0.000
1/ 2/85	17 30.0	0.000
1/ 2/85	17 40.0	0.000
1/ 2/85	17 50.0	0.000
1/ 2/85	17 60.0	0.000
1/ 2/85	18 10.0	0.000
1/ 2/85	18 20.0	0.000
1/ 2/85	18 30.0	0.000
1/ 2/85	18 40.0	0.000
1/ 2/85	18 50.0	0.000

1/ 2/85	18 60.0	0.000
1/ 2/85	19 10.0	0.000
1/ 2/85	19 20.0	0.000
1/ 2/85	19 30.0	0.000
1/ 2/85	19 40.0	0.000
1/ 2/85	19 50.0	0.000
1/ 2/85	19 60.0	0.000

FLOW WT'D MEANS
+ 0.096

FLOW WT'D STD-DEVS
+ 2.303

TOTAL LOADS
+ 8637.659
CUB-FT
1
MAIN SYSTEM M1

1 YR. DESIGN STORM

SUMMARY OF QUANTITY RESULTS (INFLOW IN CFS) AT LOCATION 63

DATE MO/DA/YR	TIME HR:MIN	FLOW CFS
1/ 1/85	19 10.0	0.011
1/ 1/85	19 20.0	0.012
1/ 1/85	19 30.0	0.012
1/ 1/85	19 40.0	0.024
1/ 1/85	19 50.0	0.022
1/ 1/85	19 60.0	0.081
1/ 1/85	20 10.0	0.088
1/ 1/85	20 20.0	0.090
1/ 1/85	20 30.0	0.089
1/ 1/85	20 40.0	0.113
1/ 1/85	20 50.0	0.108
1/ 1/85	20 60.0	0.110
1/ 1/85	21 10.0	0.109
1/ 1/85	21 20.0	0.109
1/ 1/85	21 30.0	0.109
1/ 1/85	21 40.0	0.160
1/ 1/85	21 50.0	0.146
1/ 1/85	21 60.0	0.150
1/ 1/85	22 10.0	0.149
1/ 1/85	22 20.0	0.149
1/ 1/85	22 30.0	0.149
1/ 1/85	22 40.0	0.215
1/ 1/85	22 50.0	0.193
1/ 1/85	22 60.0	0.201

1/ 1/85	23 10.0	0.198
1/ 1/85	23 20.0	0.199
1/ 1/85	23 30.0	0.199
1/ 1/85	23 40.0	0.369
1/ 1/85	23 50.0	0.297
1/ 1/85	23 60.0	0.327
1/ 2/85	0 10.0	0.314
1/ 2/85	0 20.0	0.320
1/ 2/85	0 30.0	0.317
1/ 2/85	0 40.0	1.036
1/ 2/85	0 50.0	0.617
1/ 2/85	0 60.0	0.836
1/ 2/85	1 10.0	0.710
1/ 2/85	1 20.0	0.781
1/ 2/85	1 30.0	0.740
1/ 2/85	1 40.0	0.186
1/ 2/85	1 50.0	0.379
1/ 2/85	1 60.0	0.293
1/ 2/85	2 10.0	0.330
1/ 2/85	2 20.0	0.313
1/ 2/85	2 30.0	0.320
1/ 2/85	2 40.0	0.164
1/ 2/85	2 50.0	0.211
1/ 2/85	2 60.0	0.194
1/ 2/85	3 10.0	0.200
1/ 2/85	3 20.0	0.198
1/ 2/85	3 30.0	0.199

1

MAIN SYSTEM M1

1 YR. DESIGN STORM

SUMMARY OF QUANTITY RESULTS (INFLOW IN CFS) AT LOCATION 63

DATE MO/DA/YR	TIME HR:MIN	FLOW CFS
1/ 2/85	3 40.0	0.137
1/ 2/85	3 50.0	0.153
1/ 2/85	3 60.0	0.148
1/ 2/85	4 10.0	0.149
1/ 2/85	4 20.0	0.149
1/ 2/85	4 30.0	0.149
1/ 2/85	4 40.0	0.101
1/ 2/85	4 50.0	0.111
1/ 2/85	4 60.0	0.109
1/ 2/85	5 10.0	0.109
1/ 2/85	5 20.0	0.109
1/ 2/85	5 30.0	0.109
1/ 2/85	5 40.0	0.086
1/ 2/85	5 50.0	0.090

1/ 2/85	5	60.0	0.089
1/ 2/85	6	10.0	0.089
1/ 2/85	6	20.0	0.089
1/ 2/85	6	30.0	0.089
1/ 2/85	6	40.0	0.047
1/ 2/85	6	50.0	0.050
1/ 2/85	6	60.0	0.050
1/ 2/85	7	10.0	0.008
1/ 2/85	7	20.0	0.003
1/ 2/85	7	30.0	0.002
1/ 2/85	7	40.0	0.001
1/ 2/85	7	50.0	0.001
1/ 2/85	7	60.0	0.000
1/ 2/85	8	10.0	0.000
1/ 2/85	8	20.0	0.000
1/ 2/85	8	30.0	0.000
1/ 2/85	8	40.0	0.000
1/ 2/85	8	50.0	0.000
1/ 2/85	8	60.0	0.000
1/ 2/85	9	10.0	0.000
1/ 2/85	9	20.0	0.000
1/ 2/85	9	30.0	0.000
1/ 2/85	9	40.0	0.000
1/ 2/85	9	50.0	0.000
1/ 2/85	9	60.0	0.000
1/ 2/85	10	10.0	0.000
1/ 2/85	10	20.0	0.000
1/ 2/85	10	30.0	0.000
1/ 2/85	10	40.0	0.000
1/ 2/85	10	50.0	0.000
1/ 2/85	10	60.0	0.000
1/ 2/85	11	10.0	0.000
1/ 2/85	11	20.0	0.000
1/ 2/85	11	30.0	0.000
1/ 2/85	11	40.0	0.000
1/ 2/85	11	50.0	0.000

1

MAIN SYSTEM M1

1 YR. DESIGN STORM

SUMMARY OF QUANTITY RESULTS (INFLOW IN CFS) AT LOCATION 63

DATE MO/DA/YR	TIME HR:MIN		FLOW CFS
1/ 2/85	11	60.0	0.000
1/ 2/85	12	10.0	0.000
1/ 2/85	12	20.0	0.000
1/ 2/85	12	30.0	0.000
1/ 2/85	12	40.0	0.000

1/ 2/85	12	50.0	0.000
1/ 2/85	12	60.0	0.000
1/ 2/85	13	10.0	0.000
1/ 2/85	13	20.0	0.000
1/ 2/85	13	30.0	0.000
1/ 2/85	13	40.0	0.000
1/ 2/85	13	50.0	0.000
1/ 2/85	13	60.0	0.000
1/ 2/85	14	10.0	0.000
1/ 2/85	14	20.0	0.000
1/ 2/85	14	30.0	0.000
1/ 2/85	14	40.0	0.000
1/ 2/85	14	50.0	0.000
1/ 2/85	14	60.0	0.000
1/ 2/85	15	10.0	0.000
1/ 2/85	15	20.0	0.000
1/ 2/85	15	30.0	0.000
1/ 2/85	15	40.0	0.000
1/ 2/85	15	50.0	0.000
1/ 2/85	15	60.0	0.000
1/ 2/85	16	10.0	0.000
1/ 2/85	16	20.0	0.000
1/ 2/85	16	30.0	0.000
1/ 2/85	16	40.0	0.000
1/ 2/85	16	50.0	0.000
1/ 2/85	16	60.0	0.000
1/ 2/85	17	10.0	0.000
1/ 2/85	17	20.0	0.000
1/ 2/85	17	30.0	0.000
1/ 2/85	17	40.0	0.000
1/ 2/85	17	50.0	0.000
1/ 2/85	17	60.0	0.000
1/ 2/85	18	10.0	0.000
1/ 2/85	18	20.0	0.000
1/ 2/85	18	30.0	0.000
1/ 2/85	18	40.0	0.000
1/ 2/85	18	50.0	0.000
1/ 2/85	18	60.0	0.000
1/ 2/85	19	10.0	0.000
1/ 2/85	19	20.0	0.000
1/ 2/85	19	30.0	0.000
1/ 2/85	19	40.0	0.000
1/ 2/85	19	50.0	0.000
1/ 2/85	19	60.0	0.000

FLOW WT'D MEANS
+ 0.101

FLOW WT'D STD-DEVS
+ 2.445

TOTAL LOADS

+ 9046.731
CUB-FT
1
MAIN SYSTEM M1

1 YR. DESIGN STORM

SUMMARY OF QUANTITY RESULTS (INFLOW IN CFS) AT LOCATION 6

DATE MO/DA/YR	TIME HR:MIN	FLOW CFS
1/ 1/85	19 10.0	0.007
1/ 1/85	19 20.0	0.007
1/ 1/85	19 30.0	0.007
1/ 1/85	19 40.0	0.014
1/ 1/85	19 50.0	0.013
1/ 1/85	19 60.0	0.045
1/ 1/85	20 10.0	0.054
1/ 1/85	20 20.0	0.052
1/ 1/85	20 30.0	0.053
1/ 1/85	20 40.0	0.067
1/ 1/85	20 50.0	0.064
1/ 1/85	20 60.0	0.064
1/ 1/85	21 10.0	0.064
1/ 1/85	21 20.0	0.064
1/ 1/85	21 30.0	0.064
1/ 1/85	21 40.0	0.094
1/ 1/85	21 50.0	0.086
1/ 1/85	21 60.0	0.088
1/ 1/85	22 10.0	0.088
1/ 1/85	22 20.0	0.088
1/ 1/85	22 30.0	0.088
1/ 1/85	22 40.0	0.127
1/ 1/85	22 50.0	0.114
1/ 1/85	22 60.0	0.118
1/ 1/85	23 10.0	0.117
1/ 1/85	23 20.0	0.117
1/ 1/85	23 30.0	0.117
1/ 1/85	23 40.0	0.218
1/ 1/85	23 50.0	0.175
1/ 1/85	23 60.0	0.192
1/ 2/85	0 10.0	0.185
1/ 2/85	0 20.0	0.188
1/ 2/85	0 30.0	0.187
1/ 2/85	0 40.0	0.611
1/ 2/85	0 50.0	0.364
1/ 2/85	0 60.0	0.490
1/ 2/85	1 10.0	0.421
1/ 2/85	1 20.0	0.457
1/ 2/85	1 30.0	0.438

1/ 2/85	1 40.0	0.108
1/ 2/85	1 50.0	0.222
1/ 2/85	1 60.0	0.174
1/ 2/85	2 10.0	0.193
1/ 2/85	2 20.0	0.185
1/ 2/85	2 30.0	0.188
1/ 2/85	2 40.0	0.096
1/ 2/85	2 50.0	0.124
1/ 2/85	2 60.0	0.115
1/ 2/85	3 10.0	0.118
1/ 2/85	3 20.0	0.117
1/ 2/85	3 30.0	0.117

1

MAIN SYSTEM M1

1 YR. DESIGN STORM

SUMMARY OF QUANTITY RESULTS (INFLOW IN CFS) AT LOCATION 6

DATE MO/DA/YR	TIME HR:MIN	FLOW CFS
1/ 2/85	3 40.0	0.080
1/ 2/85	3 50.0	0.090
1/ 2/85	3 60.0	0.087
1/ 2/85	4 10.0	0.088
1/ 2/85	4 20.0	0.088
1/ 2/85	4 30.0	0.088
1/ 2/85	4 40.0	0.060
1/ 2/85	4 50.0	0.065
1/ 2/85	4 60.0	0.064
1/ 2/85	5 10.0	0.064
1/ 2/85	5 20.0	0.064
1/ 2/85	5 30.0	0.064
1/ 2/85	5 40.0	0.051
1/ 2/85	5 50.0	0.053
1/ 2/85	5 60.0	0.053
1/ 2/85	6 10.0	0.053
1/ 2/85	6 20.0	0.053
1/ 2/85	6 30.0	0.053
1/ 2/85	6 40.0	0.028
1/ 2/85	6 50.0	0.029
1/ 2/85	6 60.0	0.029
1/ 2/85	7 10.0	0.005
1/ 2/85	7 20.0	0.002
1/ 2/85	7 30.0	0.001
1/ 2/85	7 40.0	0.001
1/ 2/85	7 50.0	0.000
1/ 2/85	7 60.0	0.000
1/ 2/85	8 10.0	0.000
1/ 2/85	8 20.0	0.000

1/ 2/85	8 30.0	0.000
1/ 2/85	8 40.0	0.000
1/ 2/85	8 50.0	0.000
1/ 2/85	8 60.0	0.000
1/ 2/85	9 10.0	0.000
1/ 2/85	9 20.0	0.000
1/ 2/85	9 30.0	0.000
1/ 2/85	9 40.0	0.000
1/ 2/85	9 50.0	0.000
1/ 2/85	9 60.0	0.000
1/ 2/85	10 10.0	0.000
1/ 2/85	10 20.0	0.000
1/ 2/85	10 30.0	0.000
1/ 2/85	10 40.0	0.000
1/ 2/85	10 50.0	0.000
1/ 2/85	10 60.0	0.000
1/ 2/85	11 10.0	0.000
1/ 2/85	11 20.0	0.000
1/ 2/85	11 30.0	0.000
1/ 2/85	11 40.0	0.000
1/ 2/85	11 50.0	0.000

1

MAIN SYSTEM M1

1 YR. DESIGN STORM

SUMMARY OF QUANTITY RESULTS (INFLOW IN CFS) AT LOCATION 6

DATE MO/DA/YR	TIME HR:MIN	FLOW CFS
1/ 2/85	11 60.0	0.000
1/ 2/85	12 10.0	0.000
1/ 2/85	12 20.0	0.000
1/ 2/85	12 30.0	0.000
1/ 2/85	12 40.0	0.000
1/ 2/85	12 50.0	0.000
1/ 2/85	12 60.0	0.000
1/ 2/85	13 10.0	0.000
1/ 2/85	13 20.0	0.000
1/ 2/85	13 30.0	0.000
1/ 2/85	13 40.0	0.000
1/ 2/85	13 50.0	0.000
1/ 2/85	13 60.0	0.000
1/ 2/85	14 10.0	0.000
1/ 2/85	14 20.0	0.000
1/ 2/85	14 30.0	0.000
1/ 2/85	14 40.0	0.000
1/ 2/85	14 50.0	0.000
1/ 2/85	14 60.0	0.000
1/ 2/85	15 10.0	0.000

1/ 2/85	15 20.0	0.000
1/ 2/85	15 30.0	0.000
1/ 2/85	15 40.0	0.000
1/ 2/85	15 50.0	0.000
1/ 2/85	15 60.0	0.000
1/ 2/85	16 10.0	0.000
1/ 2/85	16 20.0	0.000
1/ 2/85	16 30.0	0.000
1/ 2/85	16 40.0	0.000
1/ 2/85	16 50.0	0.000
1/ 2/85	16 60.0	0.000
1/ 2/85	17 10.0	0.000
1/ 2/85	17 20.0	0.000
1/ 2/85	17 30.0	0.000
1/ 2/85	17 40.0	0.000
1/ 2/85	17 50.0	0.000
1/ 2/85	17 60.0	0.000
1/ 2/85	18 10.0	0.000
1/ 2/85	18 20.0	0.000
1/ 2/85	18 30.0	0.000
1/ 2/85	18 40.0	0.000
1/ 2/85	18 50.0	0.000
1/ 2/85	18 60.0	0.000
1/ 2/85	19 10.0	0.000
1/ 2/85	19 20.0	0.000
1/ 2/85	19 30.0	0.000
1/ 2/85	19 40.0	0.000
1/ 2/85	19 50.0	0.000
1/ 2/85	19 60.0	0.000

FLOW WT'D MEANS
+ 0.059

FLOW WT'D STD-DEVS
+ 1.440

TOTAL LOADS
+ 5325.400
CUB-FT
1
MAIN SYSTEM M1

1 YR. DESIGN STORM

SUMMARY OF QUANTITY RESULTS (INFLOW IN CFS) AT LOCATION 4

DATE MO/DA/YR	TIME HR:MIN	FLOW CFS
1/ 1/85	19 10.0	0.006
1/ 1/85	19 20.0	0.007

1/ 1/85	19	30.0	0.007
1/ 1/85	19	40.0	0.013
1/ 1/85	19	50.0	0.012
1/ 1/85	19	60.0	0.044
1/ 1/85	20	10.0	0.048
1/ 1/85	20	20.0	0.048
1/ 1/85	20	30.0	0.048
1/ 1/85	20	40.0	0.061
1/ 1/85	20	50.0	0.058
1/ 1/85	20	60.0	0.058
1/ 1/85	21	10.0	0.058
1/ 1/85	21	20.0	0.058
1/ 1/85	21	30.0	0.058
1/ 1/85	21	40.0	0.086
1/ 1/85	21	50.0	0.078
1/ 1/85	21	60.0	0.080
1/ 1/85	22	10.0	0.079
1/ 1/85	22	20.0	0.079
1/ 1/85	22	30.0	0.079
1/ 1/85	22	40.0	0.115
1/ 1/85	22	50.0	0.103
1/ 1/85	22	60.0	0.107
1/ 1/85	23	10.0	0.105
1/ 1/85	23	20.0	0.106
1/ 1/85	23	30.0	0.106
1/ 1/85	23	40.0	0.199
1/ 1/85	23	50.0	0.157
1/ 1/85	23	60.0	0.175
1/ 2/85	0	10.0	0.167
1/ 2/85	0	20.0	0.170
1/ 2/85	0	30.0	0.169
1/ 2/85	0	40.0	0.561
1/ 2/85	0	50.0	0.323
1/ 2/85	0	60.0	0.449
1/ 2/85	1	10.0	0.377
1/ 2/85	1	20.0	0.417
1/ 2/85	1	30.0	0.394
1/ 2/85	1	40.0	0.094
1/ 2/85	1	50.0	0.205
1/ 2/85	1	60.0	0.155
1/ 2/85	2	10.0	0.176
1/ 2/85	2	20.0	0.167
1/ 2/85	2	30.0	0.171
1/ 2/85	2	40.0	0.086
1/ 2/85	2	50.0	0.113
1/ 2/85	2	60.0	0.103
1/ 2/85	3	10.0	0.107
1/ 2/85	3	20.0	0.106
1/ 2/85	3	30.0	0.106

1

MAIN SYSTEM M1

1 YR. DESIGN STORM

SUMMARY OF QUANTITY RESULTS (INFLOW IN CFS) AT LOCATION 4

DATE MO/DA/YR	TIME HR:MIN	FLOW CFS
1/ 2/85	3 40.0	0.072
1/ 2/85	3 50.0	0.082
1/ 2/85	3 60.0	0.079
1/ 2/85	4 10.0	0.080
1/ 2/85	4 20.0	0.079
1/ 2/85	4 30.0	0.079
1/ 2/85	4 40.0	0.053
1/ 2/85	4 50.0	0.059
1/ 2/85	4 60.0	0.058
1/ 2/85	5 10.0	0.058
1/ 2/85	5 20.0	0.058
1/ 2/85	5 30.0	0.058
1/ 2/85	5 40.0	0.046
1/ 2/85	5 50.0	0.048
1/ 2/85	5 60.0	0.048
1/ 2/85	6 10.0	0.048
1/ 2/85	6 20.0	0.048
1/ 2/85	6 30.0	0.048
1/ 2/85	6 40.0	0.024
1/ 2/85	6 50.0	0.027
1/ 2/85	6 60.0	0.026
1/ 2/85	7 10.0	0.004
1/ 2/85	7 20.0	0.001
1/ 2/85	7 30.0	0.001
1/ 2/85	7 40.0	0.000
1/ 2/85	7 50.0	0.000
1/ 2/85	7 60.0	0.000
1/ 2/85	8 10.0	0.000
1/ 2/85	8 20.0	0.000
1/ 2/85	8 30.0	0.000
1/ 2/85	8 40.0	0.000
1/ 2/85	8 50.0	0.000
1/ 2/85	8 60.0	0.000
1/ 2/85	9 10.0	0.000
1/ 2/85	9 20.0	0.000
1/ 2/85	9 30.0	0.000
1/ 2/85	9 40.0	0.000
1/ 2/85	9 50.0	0.000
1/ 2/85	9 60.0	0.000
1/ 2/85	10 10.0	0.000
1/ 2/85	10 20.0	0.000
1/ 2/85	10 30.0	0.000
1/ 2/85	10 40.0	0.000
1/ 2/85	10 50.0	0.000

1/ 2/85	10 60.0	0.000	
1/ 2/85	11 10.0	0.000	
1/ 2/85	11 20.0	0.000	
1/ 2/85	11 30.0	0.000	
1/ 2/85	11 40.0	0.000	
1/ 2/85	11 50.0	0.000	

1

MAIN SYSTEM M1

1 YR. DESIGN STORM

SUMMARY OF QUANTITY RESULTS (INFLOW IN CFS) AT LOCATION 4

DATE MO/DA/YR	TIME HR:MIN	FLOW CFS
1/ 2/85	11 60.0	0.000
1/ 2/85	12 10.0	0.000
1/ 2/85	12 20.0	0.000
1/ 2/85	12 30.0	0.000
1/ 2/85	12 40.0	0.000
1/ 2/85	12 50.0	0.000
1/ 2/85	12 60.0	0.000
1/ 2/85	13 10.0	0.000
1/ 2/85	13 20.0	0.000
1/ 2/85	13 30.0	0.000
1/ 2/85	13 40.0	0.000
1/ 2/85	13 50.0	0.000
1/ 2/85	13 60.0	0.000
1/ 2/85	14 10.0	0.000
1/ 2/85	14 20.0	0.000
1/ 2/85	14 30.0	0.000
1/ 2/85	14 40.0	0.000
1/ 2/85	14 50.0	0.000
1/ 2/85	14 60.0	0.000
1/ 2/85	15 10.0	0.000
1/ 2/85	15 20.0	0.000
1/ 2/85	15 30.0	0.000
1/ 2/85	15 40.0	0.000
1/ 2/85	15 50.0	0.000
1/ 2/85	15 60.0	0.000
1/ 2/85	16 10.0	0.000
1/ 2/85	16 20.0	0.000
1/ 2/85	16 30.0	0.000
1/ 2/85	16 40.0	0.000
1/ 2/85	16 50.0	0.000
1/ 2/85	16 60.0	0.000
1/ 2/85	17 10.0	0.000
1/ 2/85	17 20.0	0.000
1/ 2/85	17 30.0	0.000
1/ 2/85	17 40.0	0.000

1/ 2/85	17	50.0	0.000
1/ 2/85	17	60.0	0.000
1/ 2/85	18	10.0	0.000
1/ 2/85	18	20.0	0.000
1/ 2/85	18	30.0	0.000
1/ 2/85	18	40.0	0.000
1/ 2/85	18	50.0	0.000
1/ 2/85	18	60.0	0.000
1/ 2/85	19	10.0	0.000
1/ 2/85	19	20.0	0.000
1/ 2/85	19	30.0	0.000
1/ 2/85	19	40.0	0.000
1/ 2/85	19	50.0	0.000
1/ 2/85	19	60.0	0.000

FLOW WT'D MEANS
+ 0.054

FLOW WT'D STD-DEVS
+ 1.306

TOTAL LOADS
+ 4823.828
CUB-FT
1
MAIN SYSTEM M1

1 YR. DESIGN STORM

SUMMARY OF QUANTITY RESULTS (INFLOW IN CFS) AT LOCATION 8

DATE MO/DA/YR	TIME HR:MIN	FLOW CFS
1/ 1/85	19 10.0	0.003
1/ 1/85	19 20.0	0.006
1/ 1/85	19 30.0	0.007
1/ 1/85	19 40.0	0.013
1/ 1/85	19 50.0	0.014
1/ 1/85	19 60.0	0.025
1/ 1/85	20 10.0	0.047
1/ 1/85	20 20.0	0.055
1/ 1/85	20 30.0	0.057
1/ 1/85	20 40.0	0.068
1/ 1/85	20 50.0	0.070
1/ 1/85	20 60.0	0.070
1/ 1/85	21 10.0	0.070
1/ 1/85	21 20.0	0.070
1/ 1/85	21 30.0	0.070
1/ 1/85	21 40.0	0.092
1/ 1/85	21 50.0	0.095

1/ 1/85	21	60.0	0.095
1/ 1/85	22	10.0	0.095
1/ 1/85	22	20.0	0.095
1/ 1/85	22	30.0	0.095
1/ 1/85	22	40.0	0.125
1/ 1/85	22	50.0	0.127
1/ 1/85	22	60.0	0.127
1/ 1/85	23	10.0	0.127
1/ 1/85	23	20.0	0.127
1/ 1/85	23	30.0	0.127
1/ 1/85	23	40.0	0.207
1/ 1/85	23	50.0	0.203
1/ 1/85	23	60.0	0.203
1/ 2/85	0	10.0	0.203
1/ 2/85	0	20.0	0.203
1/ 2/85	0	30.0	0.203
1/ 2/85	0	40.0	0.551
1/ 2/85	0	50.0	0.467
1/ 2/85	0	60.0	0.486
1/ 2/85	1	10.0	0.482
1/ 2/85	1	20.0	0.483
1/ 2/85	1	30.0	0.483
1/ 2/85	1	40.0	0.179
1/ 2/85	1	50.0	0.205
1/ 2/85	1	60.0	0.203
1/ 2/85	2	10.0	0.203
1/ 2/85	2	20.0	0.203
1/ 2/85	2	30.0	0.203
1/ 2/85	2	40.0	0.128
1/ 2/85	2	50.0	0.127
1/ 2/85	2	60.0	0.127
1/ 2/85	3	10.0	0.127
1/ 2/85	3	20.0	0.127
1/ 2/85	3	30.0	0.127

1

MAIN SYSTEM M1

1 YR. DESIGN STORM

SUMMARY OF QUANTITY RESULTS (INFLOW IN CFS) AT LOCATION 8

DATE MO/DA/YR	TIME HR:MIN	FLOW CFS
1/ 2/85	3 40.0	0.098
1/ 2/85	3 50.0	0.095
1/ 2/85	3 60.0	0.095
1/ 2/85	4 10.0	0.095
1/ 2/85	4 20.0	0.095
1/ 2/85	4 30.0	0.095
1/ 2/85	4 40.0	0.073

1/ 2/85	4	50.0	0.070
1/ 2/85	4	60.0	0.070
1/ 2/85	5	10.0	0.070
1/ 2/85	5	20.0	0.070
1/ 2/85	5	30.0	0.070
1/ 2/85	5	40.0	0.059
1/ 2/85	5	50.0	0.058
1/ 2/85	5	60.0	0.057
1/ 2/85	6	10.0	0.057
1/ 2/85	6	20.0	0.057
1/ 2/85	6	30.0	0.057
1/ 2/85	6	40.0	0.038
1/ 2/85	6	50.0	0.033
1/ 2/85	6	60.0	0.032
1/ 2/85	7	10.0	0.013
1/ 2/85	7	20.0	0.006
1/ 2/85	7	30.0	0.004
1/ 2/85	7	40.0	0.002
1/ 2/85	7	50.0	0.002
1/ 2/85	7	60.0	0.001
1/ 2/85	8	10.0	0.001
1/ 2/85	8	20.0	0.001
1/ 2/85	8	30.0	0.001
1/ 2/85	8	40.0	0.000
1/ 2/85	8	50.0	0.000
1/ 2/85	8	60.0	0.000
1/ 2/85	9	10.0	0.000
1/ 2/85	9	20.0	0.000
1/ 2/85	9	30.0	0.000
1/ 2/85	9	40.0	0.000
1/ 2/85	9	50.0	0.000
1/ 2/85	9	60.0	0.000
1/ 2/85	10	10.0	0.000
1/ 2/85	10	20.0	0.000
1/ 2/85	10	30.0	0.000
1/ 2/85	10	40.0	0.000
1/ 2/85	10	50.0	0.000
1/ 2/85	10	60.0	0.000
1/ 2/85	11	10.0	0.000
1/ 2/85	11	20.0	0.000
1/ 2/85	11	30.0	0.000
1/ 2/85	11	40.0	0.000
1/ 2/85	11	50.0	0.000

1

MAIN SYSTEM M1

1 YR. DESIGN STORM

SUMMARY OF QUANTITY RESULTS (INFLOW IN CFS) AT LOCATION 8

DATE MO/DA/YR	TIME HR:MIN	FLOW CFS
1/ 2/85	11 60.0	0.000
1/ 2/85	12 10.0	0.000
1/ 2/85	12 20.0	0.000
1/ 2/85	12 30.0	0.000
1/ 2/85	12 40.0	0.000
1/ 2/85	12 50.0	0.000
1/ 2/85	12 60.0	0.000
1/ 2/85	13 10.0	0.000
1/ 2/85	13 20.0	0.000
1/ 2/85	13 30.0	0.000
1/ 2/85	13 40.0	0.000
1/ 2/85	13 50.0	0.000
1/ 2/85	13 60.0	0.000
1/ 2/85	14 10.0	0.000
1/ 2/85	14 20.0	0.000
1/ 2/85	14 30.0	0.000
1/ 2/85	14 40.0	0.000
1/ 2/85	14 50.0	0.000
1/ 2/85	14 60.0	0.000
1/ 2/85	15 10.0	0.000
1/ 2/85	15 20.0	0.000
1/ 2/85	15 30.0	0.000
1/ 2/85	15 40.0	0.000
1/ 2/85	15 50.0	0.000
1/ 2/85	15 60.0	0.000
1/ 2/85	16 10.0	0.000
1/ 2/85	16 20.0	0.000
1/ 2/85	16 30.0	0.000
1/ 2/85	16 40.0	0.000
1/ 2/85	16 50.0	0.000
1/ 2/85	16 60.0	0.000
1/ 2/85	17 10.0	0.000
1/ 2/85	17 20.0	0.000
1/ 2/85	17 30.0	0.000
1/ 2/85	17 40.0	0.000
1/ 2/85	17 50.0	0.000
1/ 2/85	17 60.0	0.000
1/ 2/85	18 10.0	0.000
1/ 2/85	18 20.0	0.000
1/ 2/85	18 30.0	0.000
1/ 2/85	18 40.0	0.000
1/ 2/85	18 50.0	0.000
1/ 2/85	18 60.0	0.000
1/ 2/85	19 10.0	0.000
1/ 2/85	19 20.0	0.000
1/ 2/85	19 30.0	0.000
1/ 2/85	19 40.0	0.000
1/ 2/85	19 50.0	0.000
1/ 2/85	19 60.0	0.000

FLOW WT'D MEANS
+ 0.064

FLOW WT'D STD-DEVS
+ 1.528

TOTAL LOADS
+ 5753.240
CUB-FT
1
MAIN SYSTEM M1

1 YR. DESIGN STORM

SUMMARY OF QUANTITY RESULTS (INFLOW IN CFS) AT LOCATION 10

DATE MO/DA/YR	TIME HR:MIN	FLOW CFS
1/ 1/85	19 10.0	0.003
1/ 1/85	19 20.0	0.006
1/ 1/85	19 30.0	0.007
1/ 1/85	19 40.0	0.012
1/ 1/85	19 50.0	0.014
1/ 1/85	19 60.0	0.024
1/ 1/85	20 10.0	0.046
1/ 1/85	20 20.0	0.054
1/ 1/85	20 30.0	0.055
1/ 1/85	20 40.0	0.066
1/ 1/85	20 50.0	0.068
1/ 1/85	20 60.0	0.068
1/ 1/85	21 10.0	0.068
1/ 1/85	21 20.0	0.068
1/ 1/85	21 30.0	0.068
1/ 1/85	21 40.0	0.090
1/ 1/85	21 50.0	0.093
1/ 1/85	21 60.0	0.093
1/ 1/85	22 10.0	0.093
1/ 1/85	22 20.0	0.093
1/ 1/85	22 30.0	0.093
1/ 1/85	22 40.0	0.122
1/ 1/85	22 50.0	0.124
1/ 1/85	22 60.0	0.124
1/ 1/85	23 10.0	0.124
1/ 1/85	23 20.0	0.124
1/ 1/85	23 30.0	0.124
1/ 1/85	23 40.0	0.201
1/ 1/85	23 50.0	0.199
1/ 1/85	23 60.0	0.199
1/ 2/85	0 10.0	0.199
1/ 2/85	0 20.0	0.199

1/ 2/85	0 30.0	0.199
1/ 2/85	0 40.0	0.534
1/ 2/85	0 50.0	0.459
1/ 2/85	0 60.0	0.475
1/ 2/85	1 10.0	0.471
1/ 2/85	1 20.0	0.472
1/ 2/85	1 30.0	0.472
1/ 2/85	1 40.0	0.178
1/ 2/85	1 50.0	0.200
1/ 2/85	1 60.0	0.199
1/ 2/85	2 10.0	0.199
1/ 2/85	2 20.0	0.199
1/ 2/85	2 30.0	0.199
1/ 2/85	2 40.0	0.126
1/ 2/85	2 50.0	0.124
1/ 2/85	2 60.0	0.124
1/ 2/85	3 10.0	0.124
1/ 2/85	3 20.0	0.124
1/ 2/85	3 30.0	0.124

1

MAIN SYSTEM M1

1 YR. DESIGN STORM

SUMMARY OF QUANTITY RESULTS (INFLOW IN CFS) AT LOCATION 10

DATE MO/DA/YR	TIME HR:MIN	FLOW CFS
1/ 2/85	3 40.0	0.096
1/ 2/85	3 50.0	0.093
1/ 2/85	3 60.0	0.093
1/ 2/85	4 10.0	0.093
1/ 2/85	4 20.0	0.093
1/ 2/85	4 30.0	0.093
1/ 2/85	4 40.0	0.072
1/ 2/85	4 50.0	0.069
1/ 2/85	4 60.0	0.068
1/ 2/85	5 10.0	0.068
1/ 2/85	5 20.0	0.068
1/ 2/85	5 30.0	0.068
1/ 2/85	5 40.0	0.058
1/ 2/85	5 50.0	0.056
1/ 2/85	5 60.0	0.056
1/ 2/85	6 10.0	0.056
1/ 2/85	6 20.0	0.056
1/ 2/85	6 30.0	0.056
1/ 2/85	6 40.0	0.037
1/ 2/85	6 50.0	0.033
1/ 2/85	6 60.0	0.032
1/ 2/85	7 10.0	0.013

1/ 2/85	7	20.0	0.007
1/ 2/85	7	30.0	0.004
1/ 2/85	7	40.0	0.003
1/ 2/85	7	50.0	0.002
1/ 2/85	7	60.0	0.001
1/ 2/85	8	10.0	0.001
1/ 2/85	8	20.0	0.001
1/ 2/85	8	30.0	0.001
1/ 2/85	8	40.0	0.000
1/ 2/85	8	50.0	0.000
1/ 2/85	8	60.0	0.000
1/ 2/85	9	10.0	0.000
1/ 2/85	9	20.0	0.000
1/ 2/85	9	30.0	0.000
1/ 2/85	9	40.0	0.000
1/ 2/85	9	50.0	0.000
1/ 2/85	9	60.0	0.000
1/ 2/85	10	10.0	0.000
1/ 2/85	10	20.0	0.000
1/ 2/85	10	30.0	0.000
1/ 2/85	10	40.0	0.000
1/ 2/85	10	50.0	0.000
1/ 2/85	10	60.0	0.000
1/ 2/85	11	10.0	0.000
1/ 2/85	11	20.0	0.000
1/ 2/85	11	30.0	0.000
1/ 2/85	11	40.0	0.000
1/ 2/85	11	50.0	0.000

1

MAIN SYSTEM M1

1 YR. DESIGN STORM

SUMMARY OF QUANTITY RESULTS (INFLOW IN CFS) AT LOCATION 10

DATE MO/DA/YR	TIME HR:MIN		FLOW CFS
1/ 2/85	11	60.0	0.000
1/ 2/85	12	10.0	0.000
1/ 2/85	12	20.0	0.000
1/ 2/85	12	30.0	0.000
1/ 2/85	12	40.0	0.000
1/ 2/85	12	50.0	0.000
1/ 2/85	12	60.0	0.000
1/ 2/85	13	10.0	0.000
1/ 2/85	13	20.0	0.000
1/ 2/85	13	30.0	0.000
1/ 2/85	13	40.0	0.000
1/ 2/85	13	50.0	0.000
1/ 2/85	13	60.0	0.000

```
  1/ 2/85  14 10.0     0.000
  1/ 2/85  14 20.0     0.000
  1/ 2/85  14 30.0     0.000
  1/ 2/85  14 40.0     0.000
  1/ 2/85  14 50.0     0.000
  1/ 2/85  14 60.0     0.000
  1/ 2/85  15 10.0     0.000
  1/ 2/85  15 20.0     0.000
  1/ 2/85  15 30.0     0.000
  1/ 2/85  15 40.0     0.000
  1/ 2/85  15 50.0     0.000
  1/ 2/85  15 60.0     0.000
  1/ 2/85  16 10.0     0.000
  1/ 2/85  16 20.0     0.000
  1/ 2/85  16 30.0     0.000
  1/ 2/85  16 40.0     0.000
  1/ 2/85  16 50.0     0.000
  1/ 2/85  16 60.0     0.000
  1/ 2/85  17 10.0     0.000
  1/ 2/85  17 20.0     0.000
  1/ 2/85  17 30.0     0.000
  1/ 2/85  17 40.0     0.000
  1/ 2/85  17 50.0     0.000
  1/ 2/85  17 60.0     0.000
  1/ 2/85  18 10.0     0.000
  1/ 2/85  18 20.0     0.000
  1/ 2/85  18 30.0     0.000
  1/ 2/85  18 40.0     0.000
  1/ 2/85  18 50.0     0.000
  1/ 2/85  18 60.0     0.000
  1/ 2/85  19 10.0     0.000
  1/ 2/85  19 20.0     0.000
  1/ 2/85  19 30.0     0.000
  1/ 2/85  19 40.0     0.000
  1/ 2/85  19 50.0     0.000
  1/ 2/85  19 60.0     0.000

 FLOW WT'D MEANS
+                 0.062

 FLOW WT'D STD-DEVS
+                 1.493

 TOTAL LOADS
+               5624.636
                 CUB-FT
1
   MAIN SYSTEM M1

                    1 YR. DESIGN STORM
```

SUMMARY OF QUANTITY RESULTS (INFLOW IN CFS) AT LOCATION 54

DATE MO/DA/YR	TIME HR:MIN	FLOW CFS
1/ 1/85	19 10.0	0.002
1/ 1/85	19 20.0	0.004
1/ 1/85	19 30.0	0.005
1/ 1/85	19 40.0	0.008
1/ 1/85	19 50.0	0.008
1/ 1/85	19 60.0	0.018
1/ 1/85	20 10.0	0.032
1/ 1/85	20 20.0	0.034
1/ 1/85	20 30.0	0.034
1/ 1/85	20 40.0	0.041
1/ 1/85	20 50.0	0.041
1/ 1/85	20 60.0	0.041
1/ 1/85	21 10.0	0.041
1/ 1/85	21 20.0	0.041
1/ 1/85	21 30.0	0.041
1/ 1/85	21 40.0	0.057
1/ 1/85	21 50.0	0.057
1/ 1/85	21 60.0	0.057
1/ 1/85	22 10.0	0.057
1/ 1/85	22 20.0	0.057
1/ 1/85	22 30.0	0.057
1/ 1/85	22 40.0	0.077
1/ 1/85	22 50.0	0.075
1/ 1/85	22 60.0	0.075
1/ 1/85	23 10.0	0.075
1/ 1/85	23 20.0	0.075
1/ 1/85	23 30.0	0.075
1/ 1/85	23 40.0	0.129
1/ 1/85	23 50.0	0.119
1/ 1/85	23 60.0	0.121
1/ 2/85	0 10.0	0.121
1/ 2/85	0 20.0	0.121
1/ 2/85	0 30.0	0.121
1/ 2/85	0 40.0	0.350
1/ 2/85	0 50.0	0.266
1/ 2/85	0 60.0	0.294
1/ 2/85	1 10.0	0.284
1/ 2/85	1 20.0	0.287
1/ 2/85	1 30.0	0.286
1/ 2/85	1 40.0	0.093
1/ 2/85	1 50.0	0.126
1/ 2/85	1 60.0	0.120
1/ 2/85	2 10.0	0.121
1/ 2/85	2 20.0	0.121
1/ 2/85	2 30.0	0.121
1/ 2/85	2 40.0	0.071
1/ 2/85	2 50.0	0.076

1/ 2/85	2 60.0	0.075
1/ 2/85	3 10.0	0.075
1/ 2/85	3 20.0	0.075
1/ 2/85	3 30.0	0.075

1

MAIN SYSTEM M1

1 YR. DESIGN STORM

SUMMARY OF QUANTITY RESULTS (INFLOW IN CFS) AT LOCATION 54

DATE MO/DA/YR	TIME HR:MIN	FLOW CFS
1/ 2/85	3 40.0	0.056
1/ 2/85	3 50.0	0.057
1/ 2/85	3 60.0	0.057
1/ 2/85	4 10.0	0.057
1/ 2/85	4 20.0	0.057
1/ 2/85	4 30.0	0.057
1/ 2/85	4 40.0	0.042
1/ 2/85	4 50.0	0.041
1/ 2/85	4 60.0	0.041
1/ 2/85	5 10.0	0.041
1/ 2/85	5 20.0	0.041
1/ 2/85	5 30.0	0.041
1/ 2/85	5 40.0	0.034
1/ 2/85	5 50.0	0.034
1/ 2/85	5 60.0	0.034
1/ 2/85	6 10.0	0.034
1/ 2/85	6 20.0	0.034
1/ 2/85	6 30.0	0.034
1/ 2/85	6 40.0	0.021
1/ 2/85	6 50.0	0.019
1/ 2/85	6 60.0	0.019
1/ 2/85	7 10.0	0.006
1/ 2/85	7 20.0	0.003
1/ 2/85	7 30.0	0.002
1/ 2/85	7 40.0	0.001
1/ 2/85	7 50.0	0.001
1/ 2/85	7 60.0	0.000
1/ 2/85	8 10.0	0.000
1/ 2/85	8 20.0	0.000
1/ 2/85	8 30.0	0.000
1/ 2/85	8 40.0	0.000
1/ 2/85	8 50.0	0.000
1/ 2/85	8 60.0	0.000
1/ 2/85	9 10.0	0.000
1/ 2/85	9 20.0	0.000
1/ 2/85	9 30.0	0.000
1/ 2/85	9 40.0	0.000

1/ 2/85	9	50.0	0.000
1/ 2/85	9	60.0	0.000
1/ 2/85	10	10.0	0.000
1/ 2/85	10	20.0	0.000
1/ 2/85	10	30.0	0.000
1/ 2/85	10	40.0	0.000
1/ 2/85	10	50.0	0.000
1/ 2/85	10	60.0	0.000
1/ 2/85	11	10.0	0.000
1/ 2/85	11	20.0	0.000
1/ 2/85	11	30.0	0.000
1/ 2/85	11	40.0	0.000
1/ 2/85	11	50.0	0.000

1

MAIN SYSTEM M1

1 YR. DESIGN STORM

SUMMARY OF QUANTITY RESULTS (INFLOW IN CFS) AT LOCATION 54

DATE MO/DA/YR	TIME HR:MIN		FLOW CFS
1/ 2/85	11	60.0	0.000
1/ 2/85	12	10.0	0.000
1/ 2/85	12	20.0	0.000
1/ 2/85	12	30.0	0.000
1/ 2/85	12	40.0	0.000
1/ 2/85	12	50.0	0.000
1/ 2/85	12	60.0	0.000
1/ 2/85	13	10.0	0.000
1/ 2/85	13	20.0	0.000
1/ 2/85	13	30.0	0.000
1/ 2/85	13	40.0	0.000
1/ 2/85	13	50.0	0.000
1/ 2/85	13	60.0	0.000
1/ 2/85	14	10.0	0.000
1/ 2/85	14	20.0	0.000
1/ 2/85	14	30.0	0.000
1/ 2/85	14	40.0	0.000
1/ 2/85	14	50.0	0.000
1/ 2/85	14	60.0	0.000
1/ 2/85	15	10.0	0.000
1/ 2/85	15	20.0	0.000
1/ 2/85	15	30.0	0.000
1/ 2/85	15	40.0	0.000
1/ 2/85	15	50.0	0.000
1/ 2/85	15	60.0	0.000
1/ 2/85	16	10.0	0.000
1/ 2/85	16	20.0	0.000
1/ 2/85	16	30.0	0.000

1/ 2/85	16 40.0	0.000
1/ 2/85	16 50.0	0.000
1/ 2/85	16 60.0	0.000
1/ 2/85	17 10.0	0.000
1/ 2/85	17 20.0	0.000
1/ 2/85	17 30.0	0.000
1/ 2/85	17 40.0	0.000
1/ 2/85	17 50.0	0.000
1/ 2/85	17 60.0	0.000
1/ 2/85	18 10.0	0.000
1/ 2/85	18 20.0	0.000
1/ 2/85	18 30.0	0.000
1/ 2/85	18 40.0	0.000
1/ 2/85	18 50.0	0.000
1/ 2/85	18 60.0	0.000
1/ 2/85	19 10.0	0.000
1/ 2/85	19 20.0	0.000
1/ 2/85	19 30.0	0.000
1/ 2/85	19 40.0	0.000
1/ 2/85	19 50.0	0.000
1/ 2/85	19 60.0	0.000

FLOW WT'D MEANS
+ 0.038

FLOW WT'D STD-DEVS
+ 0.913

TOTAL LOADS
+ 3419.916
CUB-FT
1
MAIN SYSTEM M1

1 YR. DESIGN STORM

SUMMARY OF QUANTITY RESULTS (INFLOW IN CFS) AT LOCATION 56

DATE MO/DA/YR	TIME HR:MIN	FLOW CFS
1/ 1/85	19 10.0	0.004
1/ 1/85	19 20.0	0.004
1/ 1/85	19 30.0	0.004
1/ 1/85	19 40.0	0.008
1/ 1/85	19 50.0	0.007
1/ 1/85	19 60.0	0.025
1/ 1/85	20 10.0	0.029
1/ 1/85	20 20.0	0.028
1/ 1/85	20 30.0	0.028
1/ 1/85	20 40.0	0.035

1/ 1/85	20	50.0	0.034
1/ 1/85	20	60.0	0.034
1/ 1/85	21	10.0	0.034
1/ 1/85	21	20.0	0.034
1/ 1/85	21	30.0	0.034
1/ 1/85	21	40.0	0.050
1/ 1/85	21	50.0	0.046
1/ 1/85	21	60.0	0.047
1/ 1/85	22	10.0	0.047
1/ 1/85	22	20.0	0.047
1/ 1/85	22	30.0	0.047
1/ 1/85	22	40.0	0.067
1/ 1/85	22	50.0	0.060
1/ 1/85	22	60.0	0.063
1/ 1/85	23	10.0	0.062
1/ 1/85	23	20.0	0.062
1/ 1/85	23	30.0	0.062
1/ 1/85	23	40.0	0.116
1/ 1/85	23	50.0	0.093
1/ 1/85	23	60.0	0.102
1/ 2/85	0	10.0	0.098
1/ 2/85	0	20.0	0.100
1/ 2/85	0	30.0	0.099
1/ 2/85	0	40.0	0.326
1/ 2/85	0	50.0	0.192
1/ 2/85	0	60.0	0.261
1/ 2/85	1	10.0	0.223
1/ 2/85	1	20.0	0.243
1/ 2/85	1	30.0	0.232
1/ 2/85	1	40.0	0.057
1/ 2/85	1	50.0	0.119
1/ 2/85	1	60.0	0.092
1/ 2/85	2	10.0	0.102
1/ 2/85	2	20.0	0.098
1/ 2/85	2	30.0	0.100
1/ 2/85	2	40.0	0.051
1/ 2/85	2	50.0	0.066
1/ 2/85	2	60.0	0.061
1/ 2/85	3	10.0	0.063
1/ 2/85	3	20.0	0.062
1/ 2/85	3	30.0	0.062

1

MAIN SYSTEM M1

1 YR. DESIGN STORM

SUMMARY OF QUANTITY RESULTS (INFLOW IN CFS) AT LOCATION 56

DATE MO/DA/YR	TIME HR:MIN	FLOW CFS

1/ 2/85	3	40.0	0.043
1/ 2/85	3	50.0	0.048
1/ 2/85	3	60.0	0.046
1/ 2/85	4	10.0	0.047
1/ 2/85	4	20.0	0.047
1/ 2/85	4	30.0	0.047
1/ 2/85	4	40.0	0.032
1/ 2/85	4	50.0	0.035
1/ 2/85	4	60.0	0.034
1/ 2/85	5	10.0	0.034
1/ 2/85	5	20.0	0.034
1/ 2/85	5	30.0	0.034
1/ 2/85	5	40.0	0.027
1/ 2/85	5	50.0	0.028
1/ 2/85	5	60.0	0.028
1/ 2/85	6	10.0	0.028
1/ 2/85	6	20.0	0.028
1/ 2/85	6	30.0	0.028
1/ 2/85	6	40.0	0.015
1/ 2/85	6	50.0	0.016
1/ 2/85	6	60.0	0.016
1/ 2/85	7	10.0	0.002
1/ 2/85	7	20.0	0.001
1/ 2/85	7	30.0	0.000
1/ 2/85	7	40.0	0.000
1/ 2/85	7	50.0	0.000
1/ 2/85	7	60.0	0.000
1/ 2/85	8	10.0	0.000
1/ 2/85	8	20.0	0.000
1/ 2/85	8	30.0	0.000
1/ 2/85	8	40.0	0.000
1/ 2/85	8	50.0	0.000
1/ 2/85	8	60.0	0.000
1/ 2/85	9	10.0	0.000
1/ 2/85	9	20.0	0.000
1/ 2/85	9	30.0	0.000
1/ 2/85	9	40.0	0.000
1/ 2/85	9	50.0	0.000
1/ 2/85	9	60.0	0.000
1/ 2/85	10	10.0	0.000
1/ 2/85	10	20.0	0.000
1/ 2/85	10	30.0	0.000
1/ 2/85	10	40.0	0.000
1/ 2/85	10	50.0	0.000
1/ 2/85	10	60.0	0.000
1/ 2/85	11	10.0	0.000
1/ 2/85	11	20.0	0.000
1/ 2/85	11	30.0	0.000
1/ 2/85	11	40.0	0.000
1/ 2/85	11	50.0	0.000

1

MAIN SYSTEM M1

1 YR. DESIGN STORM

SUMMARY OF QUANTITY RESULTS (INFLOW IN CFS) AT LOCATION 56

DATE MO/DA/YR	TIME HR:MIN	FLOW CFS
1/ 2/85	11 60.0	0.000
1/ 2/85	12 10.0	0.000
1/ 2/85	12 20.0	0.000
1/ 2/85	12 30.0	0.000
1/ 2/85	12 40.0	0.000
1/ 2/85	12 50.0	0.000
1/ 2/85	12 60.0	0.000
1/ 2/85	13 10.0	0.000
1/ 2/85	13 20.0	0.000
1/ 2/85	13 30.0	0.000
1/ 2/85	13 40.0	0.000
1/ 2/85	13 50.0	0.000
1/ 2/85	13 60.0	0.000
1/ 2/85	14 10.0	0.000
1/ 2/85	14 20.0	0.000
1/ 2/85	14 30.0	0.000
1/ 2/85	14 40.0	0.000
1/ 2/85	14 50.0	0.000
1/ 2/85	14 60.0	0.000
1/ 2/85	15 10.0	0.000
1/ 2/85	15 20.0	0.000
1/ 2/85	15 30.0	0.000
1/ 2/85	15 40.0	0.000
1/ 2/85	15 50.0	0.000
1/ 2/85	15 60.0	0.000
1/ 2/85	16 10.0	0.000
1/ 2/85	16 20.0	0.000
1/ 2/85	16 30.0	0.000
1/ 2/85	16 40.0	0.000
1/ 2/85	16 50.0	0.000
1/ 2/85	16 60.0	0.000
1/ 2/85	17 10.0	0.000
1/ 2/85	17 20.0	0.000
1/ 2/85	17 30.0	0.000
1/ 2/85	17 40.0	0.000
1/ 2/85	17 50.0	0.000
1/ 2/85	17 60.0	0.000
1/ 2/85	18 10.0	0.000
1/ 2/85	18 20.0	0.000
1/ 2/85	18 30.0	0.000
1/ 2/85	18 40.0	0.000
1/ 2/85	18 50.0	0.000
1/ 2/85	18 60.0	0.000

1/ 2/85	19 10.0	0.000
1/ 2/85	19 20.0	0.000
1/ 2/85	19 30.0	0.000
1/ 2/85	19 40.0	0.000
1/ 2/85	19 50.0	0.000
1/ 2/85	19 60.0	0.000

FLOW WT'D MEANS
+ 0.031

FLOW WT'D STD-DEVS
+ 0.765

TOTAL LOADS
+ 2828.493
CUB-FT
1
MAIN SYSTEM M1

1 YR. DESIGN STORM

SUMMARY OF QUANTITY RESULTS (INFLOW IN CFS) AT LOCATION 46

DATE MO/DA/YR	TIME HR:MIN	FLOW CFS
1/ 1/85	19 10.0	0.008
1/ 1/85	19 20.0	0.009
1/ 1/85	19 30.0	0.009
1/ 1/85	19 40.0	0.017
1/ 1/85	19 50.0	0.016
1/ 1/85	19 60.0	0.057
1/ 1/85	20 10.0	0.064
1/ 1/85	20 20.0	0.064
1/ 1/85	20 30.0	0.064
1/ 1/85	20 40.0	0.081
1/ 1/85	20 50.0	0.077
1/ 1/85	20 60.0	0.078
1/ 1/85	21 10.0	0.078
1/ 1/85	21 20.0	0.078
1/ 1/85	21 30.0	0.078
1/ 1/85	21 40.0	0.114
1/ 1/85	21 50.0	0.104
1/ 1/85	21 60.0	0.107
1/ 1/85	22 10.0	0.106
1/ 1/85	22 20.0	0.106
1/ 1/85	22 30.0	0.106
1/ 1/85	22 40.0	0.153
1/ 1/85	22 50.0	0.138
1/ 1/85	22 60.0	0.143
1/ 1/85	23 10.0	0.141

1/ 1/85	23 20.0	0.142
1/ 1/85	23 30.0	0.141
1/ 1/85	23 40.0	0.264
1/ 1/85	23 50.0	0.212
1/ 1/85	23 60.0	0.233
1/ 2/85	0 10.0	0.224
1/ 2/85	0 20.0	0.228
1/ 2/85	0 30.0	0.226
1/ 2/85	0 40.0	0.741
1/ 2/85	0 50.0	0.438
1/ 2/85	0 60.0	0.596
1/ 2/85	1 10.0	0.507
1/ 2/85	1 20.0	0.556
1/ 2/85	1 30.0	0.528
1/ 2/85	1 40.0	0.131
1/ 2/85	1 50.0	0.270
1/ 2/85	1 60.0	0.209
1/ 2/85	2 10.0	0.234
1/ 2/85	2 20.0	0.223
1/ 2/85	2 30.0	0.228
1/ 2/85	2 40.0	0.116
1/ 2/85	2 50.0	0.150
1/ 2/85	2 60.0	0.138
1/ 2/85	3 10.0	0.143
1/ 2/85	3 20.0	0.141
1/ 2/85	3 30.0	0.142

1

MAIN SYSTEM M1

1 YR. DESIGN STORM

SUMMARY OF QUANTITY RESULTS (INFLOW IN CFS) AT LOCATION 46

DATE MO/DA/YR	TIME HR:MIN	FLOW CFS
1/ 2/85	3 40.0	0.097
1/ 2/85	3 50.0	0.109
1/ 2/85	3 60.0	0.105
1/ 2/85	4 10.0	0.106
1/ 2/85	4 20.0	0.106
1/ 2/85	4 30.0	0.106
1/ 2/85	4 40.0	0.072
1/ 2/85	4 50.0	0.079
1/ 2/85	4 60.0	0.077
1/ 2/85	5 10.0	0.078
1/ 2/85	5 20.0	0.078
1/ 2/85	5 30.0	0.078
1/ 2/85	5 40.0	0.061
1/ 2/85	5 50.0	0.064
1/ 2/85	5 60.0	0.064

1/ 2/85	6	10.0	0.064
1/ 2/85	6	20.0	0.064
1/ 2/85	6	30.0	0.064
1/ 2/85	6	40.0	0.033
1/ 2/85	6	50.0	0.036
1/ 2/85	6	60.0	0.035
1/ 2/85	7	10.0	0.006
1/ 2/85	7	20.0	0.002
1/ 2/85	7	30.0	0.001
1/ 2/85	7	40.0	0.001
1/ 2/85	7	50.0	0.000
1/ 2/85	7	60.0	0.000
1/ 2/85	8	10.0	0.000
1/ 2/85	8	20.0	0.000
1/ 2/85	8	30.0	0.000
1/ 2/85	8	40.0	0.000
1/ 2/85	8	50.0	0.000
1/ 2/85	8	60.0	0.000
1/ 2/85	9	10.0	0.000
1/ 2/85	9	20.0	0.000
1/ 2/85	9	30.0	0.000
1/ 2/85	9	40.0	0.000
1/ 2/85	9	50.0	0.000
1/ 2/85	9	60.0	0.000
1/ 2/85	10	10.0	0.000
1/ 2/85	10	20.0	0.000
1/ 2/85	10	30.0	0.000
1/ 2/85	10	40.0	0.000
1/ 2/85	10	50.0	0.000
1/ 2/85	10	60.0	0.000
1/ 2/85	11	10.0	0.000
1/ 2/85	11	20.0	0.000
1/ 2/85	11	30.0	0.000
1/ 2/85	11	40.0	0.000
1/ 2/85	11	50.0	0.000

1

MAIN SYSTEM M1

1 YR. DESIGN STORM

SUMMARY OF QUANTITY RESULTS (INFLOW IN CFS) AT LOCATION 46

DATE MO/DA/YR	TIME HR:MIN		FLOW CFS
1/ 2/85	11	60.0	0.000
1/ 2/85	12	10.0	0.000
1/ 2/85	12	20.0	0.000
1/ 2/85	12	30.0	0.000
1/ 2/85	12	40.0	0.000
1/ 2/85	12	50.0	0.000

1/ 2/85	12	60.0	0.000
1/ 2/85	13	10.0	0.000
1/ 2/85	13	20.0	0.000
1/ 2/85	13	30.0	0.000
1/ 2/85	13	40.0	0.000
1/ 2/85	13	50.0	0.000
1/ 2/85	13	60.0	0.000
1/ 2/85	14	10.0	0.000
1/ 2/85	14	20.0	0.000
1/ 2/85	14	30.0	0.000
1/ 2/85	14	40.0	0.000
1/ 2/85	14	50.0	0.000
1/ 2/85	14	60.0	0.000
1/ 2/85	15	10.0	0.000
1/ 2/85	15	20.0	0.000
1/ 2/85	15	30.0	0.000
1/ 2/85	15	40.0	0.000
1/ 2/85	15	50.0	0.000
1/ 2/85	15	60.0	0.000
1/ 2/85	16	10.0	0.000
1/ 2/85	16	20.0	0.000
1/ 2/85	16	30.0	0.000
1/ 2/85	16	40.0	0.000
1/ 2/85	16	50.0	0.000
1/ 2/85	16	60.0	0.000
1/ 2/85	17	10.0	0.000
1/ 2/85	17	20.0	0.000
1/ 2/85	17	30.0	0.000
1/ 2/85	17	40.0	0.000
1/ 2/85	17	50.0	0.000
1/ 2/85	17	60.0	0.000
1/ 2/85	18	10.0	0.000
1/ 2/85	18	20.0	0.000
1/ 2/85	18	30.0	0.000
1/ 2/85	18	40.0	0.000
1/ 2/85	18	50.0	0.000
1/ 2/85	18	60.0	0.000
1/ 2/85	19	10.0	0.000
1/ 2/85	19	20.0	0.000
1/ 2/85	19	30.0	0.000
1/ 2/85	19	40.0	0.000
1/ 2/85	19	50.0	0.000
1/ 2/85	19	60.0	0.000

FLOW WT'D MEANS
+ 0.072

FLOW WT'D STD-DEVS
+ 1.743

TOTAL LOADS
+ 6447.636

CUB-FT

1

MAIN SYSTEM M1

1 YR. DESIGN STORM

SUMMARY OF QUANTITY RESULTS (INFLOW IN CFS) AT LOCATION 44

DATE MO/DA/YR	TIME HR:MIN	FLOW CFS
1/ 1/85	19 10.0	0.004
1/ 1/85	19 20.0	0.004
1/ 1/85	19 30.0	0.004
1/ 1/85	19 40.0	0.008
1/ 1/85	19 50.0	0.008
1/ 1/85	19 60.0	0.024
1/ 1/85	20 10.0	0.031
1/ 1/85	20 20.0	0.030
1/ 1/85	20 30.0	0.031
1/ 1/85	20 40.0	0.038
1/ 1/85	20 50.0	0.037
1/ 1/85	20 60.0	0.037
1/ 1/85	21 10.0	0.037
1/ 1/85	21 20.0	0.037
1/ 1/85	21 30.0	0.037
1/ 1/85	21 40.0	0.054
1/ 1/85	21 50.0	0.050
1/ 1/85	21 60.0	0.051
1/ 1/85	22 10.0	0.051
1/ 1/85	22 20.0	0.051
1/ 1/85	22 30.0	0.051
1/ 1/85	22 40.0	0.073
1/ 1/85	22 50.0	0.066
1/ 1/85	22 60.0	0.068
1/ 1/85	23 10.0	0.068
1/ 1/85	23 20.0	0.068
1/ 1/85	23 30.0	0.068
1/ 1/85	23 40.0	0.124
1/ 1/85	23 50.0	0.103
1/ 1/85	23 60.0	0.110
1/ 2/85	0 10.0	0.108
1/ 2/85	0 20.0	0.109
1/ 2/85	0 30.0	0.108
1/ 2/85	0 40.0	0.348
1/ 2/85	0 50.0	0.216
1/ 2/85	0 60.0	0.279
1/ 2/85	1 10.0	0.247
1/ 2/85	1 20.0	0.263
1/ 2/85	1 30.0	0.255
1/ 2/85	1 40.0	0.065

1/ 2/85	1 50.0	0.125
1/ 2/85	1 60.0	0.102
1/ 2/85	2 10.0	0.111
1/ 2/85	2 20.0	0.108
1/ 2/85	2 30.0	0.109
1/ 2/85	2 40.0	0.057
1/ 2/85	2 50.0	0.071
1/ 2/85	2 60.0	0.067
1/ 2/85	3 10.0	0.068
1/ 2/85	3 20.0	0.068
1/ 2/85	3 30.0	0.068

1

MAIN SYSTEM M1

1 YR. DESIGN STORM

SUMMARY OF QUANTITY RESULTS (INFLOW IN CFS) AT LOCATION 44

DATE MO/DA/YR	TIME HR:MIN	FLOW CFS
1/ 2/85	3 40.0	0.047
1/ 2/85	3 50.0	0.052
1/ 2/85	3 60.0	0.051
1/ 2/85	4 10.0	0.051
1/ 2/85	4 20.0	0.051
1/ 2/85	4 30.0	0.051
1/ 2/85	4 40.0	0.035
1/ 2/85	4 50.0	0.038
1/ 2/85	4 60.0	0.037
1/ 2/85	5 10.0	0.037
1/ 2/85	5 20.0	0.037
1/ 2/85	5 30.0	0.037
1/ 2/85	5 40.0	0.030
1/ 2/85	5 50.0	0.031
1/ 2/85	5 60.0	0.030
1/ 2/85	6 10.0	0.030
1/ 2/85	6 20.0	0.030
1/ 2/85	6 30.0	0.030
1/ 2/85	6 40.0	0.016
1/ 2/85	6 50.0	0.017
1/ 2/85	6 60.0	0.017
1/ 2/85	7 10.0	0.003
1/ 2/85	7 20.0	0.001
1/ 2/85	7 30.0	0.001
1/ 2/85	7 40.0	0.000
1/ 2/85	7 50.0	0.000
1/ 2/85	7 60.0	0.000
1/ 2/85	8 10.0	0.000
1/ 2/85	8 20.0	0.000
1/ 2/85	8 30.0	0.000

1/ 2/85	8 40.0	0.000
1/ 2/85	8 50.0	0.000
1/ 2/85	8 60.0	0.000
1/ 2/85	9 10.0	0.000
1/ 2/85	9 20.0	0.000
1/ 2/85	9 30.0	0.000
1/ 2/85	9 40.0	0.000
1/ 2/85	9 50.0	0.000
1/ 2/85	9 60.0	0.000
1/ 2/85	10 10.0	0.000
1/ 2/85	10 20.0	0.000
1/ 2/85	10 30.0	0.000
1/ 2/85	10 40.0	0.000
1/ 2/85	10 50.0	0.000
1/ 2/85	10 60.0	0.000
1/ 2/85	11 10.0	0.000
1/ 2/85	11 20.0	0.000
1/ 2/85	11 30.0	0.000
1/ 2/85	11 40.0	0.000
1/ 2/85	11 50.0	0.000

1

MAIN SYSTEM M1

1 YR. DESIGN STORM

SUMMARY OF QUANTITY RESULTS (INFLOW IN CFS) AT LOCATION 44

DATE MO/DA/YR	TIME HR:MIN	FLOW CFS
1/ 2/85	11 60.0	0.000
1/ 2/85	12 10.0	0.000
1/ 2/85	12 20.0	0.000
1/ 2/85	12 30.0	0.000
1/ 2/85	12 40.0	0.000
1/ 2/85	12 50.0	0.000
1/ 2/85	12 60.0	0.000
1/ 2/85	13 10.0	0.000
1/ 2/85	13 20.0	0.000
1/ 2/85	13 30.0	0.000
1/ 2/85	13 40.0	0.000
1/ 2/85	13 50.0	0.000
1/ 2/85	13 60.0	0.000
1/ 2/85	14 10.0	0.000
1/ 2/85	14 20.0	0.000
1/ 2/85	14 30.0	0.000
1/ 2/85	14 40.0	0.000
1/ 2/85	14 50.0	0.000
1/ 2/85	14 60.0	0.000
1/ 2/85	15 10.0	0.000
1/ 2/85	15 20.0	0.000

1/ 2/85	15 30.0	0.000
1/ 2/85	15 40.0	0.000
1/ 2/85	15 50.0	0.000
1/ 2/85	15 60.0	0.000
1/ 2/85	16 10.0	0.000
1/ 2/85	16 20.0	0.000
1/ 2/85	16 30.0	0.000
1/ 2/85	16 40.0	0.000
1/ 2/85	16 50.0	0.000
1/ 2/85	16 60.0	0.000
1/ 2/85	17 10.0	0.000
1/ 2/85	17 20.0	0.000
1/ 2/85	17 30.0	0.000
1/ 2/85	17 40.0	0.000
1/ 2/85	17 50.0	0.000
1/ 2/85	17 60.0	0.000
1/ 2/85	18 10.0	0.000
1/ 2/85	18 20.0	0.000
1/ 2/85	18 30.0	0.000
1/ 2/85	18 40.0	0.000
1/ 2/85	18 50.0	0.000
1/ 2/85	18 60.0	0.000
1/ 2/85	19 10.0	0.000
1/ 2/85	19 20.0	0.000
1/ 2/85	19 30.0	0.000
1/ 2/85	19 40.0	0.000
1/ 2/85	19 50.0	0.000
1/ 2/85	19 60.0	0.000

FLOW WT'D MEANS
+ 0.034

FLOW WT'D STD-DEVS
+ 0.831

TOTAL LOADS
+ 3082.409
CUB-FT
1
MAIN SYSTEM M1

1 YR. DESIGN STORM

SUMMARY OF QUANTITY RESULTS (INFLOW IN CFS) AT LOCATION 14

DATE MO/DA/YR	TIME HR:MIN	FLOW CFS
1/ 1/85	19 10.0	0.005
1/ 1/85	19 20.0	0.005
1/ 1/85	19 30.0	0.005

1/ 1/85	19	40.0	0.010
1/ 1/85	19	50.0	0.009
1/ 1/85	19	60.0	0.037
1/ 1/85	20	10.0	0.035
1/ 1/85	20	20.0	0.036
1/ 1/85	20	30.0	0.036
1/ 1/85	20	40.0	0.046
1/ 1/85	20	50.0	0.043
1/ 1/85	20	60.0	0.044
1/ 1/85	21	10.0	0.043
1/ 1/85	21	20.0	0.043
1/ 1/85	21	30.0	0.043
1/ 1/85	21	40.0	0.065
1/ 1/85	21	50.0	0.057
1/ 1/85	21	60.0	0.060
1/ 1/85	22	10.0	0.059
1/ 1/85	22	20.0	0.059
1/ 1/85	22	30.0	0.059
1/ 1/85	22	40.0	0.087
1/ 1/85	22	50.0	0.076
1/ 1/85	22	60.0	0.080
1/ 1/85	23	10.0	0.079
1/ 1/85	23	20.0	0.079
1/ 1/85	23	30.0	0.079
1/ 1/85	23	40.0	0.151
1/ 1/85	23	50.0	0.116
1/ 1/85	23	60.0	0.131
1/ 2/85	0	10.0	0.124
1/ 2/85	0	20.0	0.128
1/ 2/85	0	30.0	0.126
1/ 2/85	0	40.0	0.426
1/ 2/85	0	50.0	0.235
1/ 2/85	0	60.0	0.341
1/ 2/85	1	10.0	0.277
1/ 2/85	1	20.0	0.314
1/ 2/85	1	30.0	0.292
1/ 2/85	1	40.0	0.068
1/ 2/85	1	50.0	0.157
1/ 2/85	1	60.0	0.113
1/ 2/85	2	10.0	0.133
1/ 2/85	2	20.0	0.124
1/ 2/85	2	30.0	0.128
1/ 2/85	2	40.0	0.062
1/ 2/85	2	50.0	0.086
1/ 2/85	2	60.0	0.077
1/ 2/85	3	10.0	0.080
1/ 2/85	3	20.0	0.079
1/ 2/85	3	30.0	0.079

1

MAIN SYSTEM M1

1 YR. DESIGN STORM

SUMMARY OF QUANTITY RESULTS (INFLOW IN CFS) AT LOCATION 14

DATE MO/DA/YR	TIME HR:MIN	FLOW CFS
1/ 2/85	3 40.0	0.053
1/ 2/85	3 50.0	0.061
1/ 2/85	3 60.0	0.059
1/ 2/85	4 10.0	0.060
1/ 2/85	4 20.0	0.059
1/ 2/85	4 30.0	0.059
1/ 2/85	4 40.0	0.039
1/ 2/85	4 50.0	0.045
1/ 2/85	4 60.0	0.043
1/ 2/85	5 10.0	0.044
1/ 2/85	5 20.0	0.043
1/ 2/85	5 30.0	0.043
1/ 2/85	5 40.0	0.034
1/ 2/85	5 50.0	0.036
1/ 2/85	5 60.0	0.035
1/ 2/85	6 10.0	0.036
1/ 2/85	6 20.0	0.036
1/ 2/85	6 30.0	0.036
1/ 2/85	6 40.0	0.018
1/ 2/85	6 50.0	0.020
1/ 2/85	6 60.0	0.020
1/ 2/85	7 10.0	0.002
1/ 2/85	7 20.0	0.001
1/ 2/85	7 30.0	0.000
1/ 2/85	7 40.0	0.000
1/ 2/85	7 50.0	0.000
1/ 2/85	7 60.0	0.000
1/ 2/85	8 10.0	0.000
1/ 2/85	8 20.0	0.000
1/ 2/85	8 30.0	0.000
1/ 2/85	8 40.0	0.000
1/ 2/85	8 50.0	0.000
1/ 2/85	8 60.0	0.000
1/ 2/85	9 10.0	0.000
1/ 2/85	9 20.0	0.000
1/ 2/85	9 30.0	0.000
1/ 2/85	9 40.0	0.000
1/ 2/85	9 50.0	0.000
1/ 2/85	9 60.0	0.000
1/ 2/85	10 10.0	0.000
1/ 2/85	10 20.0	0.000
1/ 2/85	10 30.0	0.000
1/ 2/85	10 40.0	0.000
1/ 2/85	10 50.0	0.000
1/ 2/85	10 60.0	0.000

1/ 2/85	11 10.0	0.000	
1/ 2/85	11 20.0	0.000	
1/ 2/85	11 30.0	0.000	
1/ 2/85	11 40.0	0.000	
1/ 2/85	11 50.0	0.000	

1

MAIN SYSTEM M1

1 YR. DESIGN STORM

SUMMARY OF QUANTITY RESULTS (INFLOW IN CFS) AT LOCATION 14

DATE MO/DA/YR	TIME HR:MIN	FLOW CFS
1/ 2/85	11 60.0	0.000
1/ 2/85	12 10.0	0.000
1/ 2/85	12 20.0	0.000
1/ 2/85	12 30.0	0.000
1/ 2/85	12 40.0	0.000
1/ 2/85	12 50.0	0.000
1/ 2/85	12 60.0	0.000
1/ 2/85	13 10.0	0.000
1/ 2/85	13 20.0	0.000
1/ 2/85	13 30.0	0.000
1/ 2/85	13 40.0	0.000
1/ 2/85	13 50.0	0.000
1/ 2/85	13 60.0	0.000
1/ 2/85	14 10.0	0.000
1/ 2/85	14 20.0	0.000
1/ 2/85	14 30.0	0.000
1/ 2/85	14 40.0	0.000
1/ 2/85	14 50.0	0.000
1/ 2/85	14 60.0	0.000
1/ 2/85	15 10.0	0.000
1/ 2/85	15 20.0	0.000
1/ 2/85	15 30.0	0.000
1/ 2/85	15 40.0	0.000
1/ 2/85	15 50.0	0.000
1/ 2/85	15 60.0	0.000
1/ 2/85	16 10.0	0.000
1/ 2/85	16 20.0	0.000
1/ 2/85	16 30.0	0.000
1/ 2/85	16 40.0	0.000
1/ 2/85	16 50.0	0.000
1/ 2/85	16 60.0	0.000
1/ 2/85	17 10.0	0.000
1/ 2/85	17 20.0	0.000
1/ 2/85	17 30.0	0.000
1/ 2/85	17 40.0	0.000
1/ 2/85	17 50.0	0.000

1/ 2/85	17	60.0	0.000
1/ 2/85	18	10.0	0.000
1/ 2/85	18	20.0	0.000
1/ 2/85	18	30.0	0.000
1/ 2/85	18	40.0	0.000
1/ 2/85	18	50.0	0.000
1/ 2/85	18	60.0	0.000
1/ 2/85	19	10.0	0.000
1/ 2/85	19	20.0	0.000
1/ 2/85	19	30.0	0.000
1/ 2/85	19	40.0	0.000
1/ 2/85	19	50.0	0.000
1/ 2/85	19	60.0	0.000

FLOW WT'D MEANS
+ 0.040

FLOW WT'D STD-DEVS
+ 0.979

TOTAL LOADS
+ 3605.419
CUB-FT
1
MAIN SYSTEM M1

1 YR. DESIGN STORM

SUMMARY OF QUANTITY RESULTS (INFLOW IN CFS) AT LOCATION 18

DATE MO/DA/YR	TIME HR:MIN	FLOW CFS
1/ 1/85	19 10.0	0.012
1/ 1/85	19 20.0	0.014
1/ 1/85	19 30.0	0.014
1/ 1/85	19 40.0	0.027
1/ 1/85	19 50.0	0.026
1/ 1/85	19 60.0	0.081
1/ 1/85	20 10.0	0.106
1/ 1/85	20 20.0	0.103
1/ 1/85	20 30.0	0.103
1/ 1/85	20 40.0	0.130
1/ 1/85	20 50.0	0.125
1/ 1/85	20 60.0	0.126
1/ 1/85	21 10.0	0.126
1/ 1/85	21 20.0	0.126
1/ 1/85	21 30.0	0.126
1/ 1/85	21 40.0	0.182
1/ 1/85	21 50.0	0.169
1/ 1/85	21 60.0	0.172

1/ 1/85	22	10.0	0.172
1/ 1/85	22	20.0	0.172
1/ 1/85	22	30.0	0.172
1/ 1/85	22	40.0	0.246
1/ 1/85	22	50.0	0.224
1/ 1/85	22	60.0	0.230
1/ 1/85	23	10.0	0.229
1/ 1/85	23	20.0	0.229
1/ 1/85	23	30.0	0.229
1/ 1/85	23	40.0	0.421
1/ 1/85	23	50.0	0.347
1/ 1/85	23	60.0	0.373
1/ 2/85	0	10.0	0.364
1/ 2/85	0	20.0	0.367
1/ 2/85	0	30.0	0.366
1/ 2/85	0	40.0	1.177
1/ 2/85	0	50.0	0.728
1/ 2/85	0	60.0	0.945
1/ 2/85	1	10.0	0.833
1/ 2/85	1	20.0	0.889
1/ 2/85	1	30.0	0.860
1/ 2/85	1	40.0	0.221
1/ 2/85	1	50.0	0.424
1/ 2/85	1	60.0	0.346
1/ 2/85	2	10.0	0.374
1/ 2/85	2	20.0	0.363
1/ 2/85	2	30.0	0.367
1/ 2/85	2	40.0	0.193
1/ 2/85	2	50.0	0.239
1/ 2/85	2	60.0	0.226
1/ 2/85	3	10.0	0.230
1/ 2/85	3	20.0	0.229
1/ 2/85	3	30.0	0.229

1

MAIN SYSTEM M1

1 YR. DESIGN STORM

SUMMARY OF QUANTITY RESULTS (INFLOW IN CFS) AT LOCATION 18

DATE MO/DA/YR	TIME HR:MIN		FLOW CFS
1/ 2/85	3	40.0	0.159
1/ 2/85	3	50.0	0.175
1/ 2/85	3	60.0	0.171
1/ 2/85	4	10.0	0.172
1/ 2/85	4	20.0	0.172
1/ 2/85	4	30.0	0.172
1/ 2/85	4	40.0	0.118
1/ 2/85	4	50.0	0.127

1/ 2/85	4	60.0	0.126
1/ 2/85	5	10.0	0.126
1/ 2/85	5	20.0	0.126
1/ 2/85	5	30.0	0.126
1/ 2/85	5	40.0	0.100
1/ 2/85	5	50.0	0.103
1/ 2/85	5	60.0	0.103
1/ 2/85	6	10.0	0.103
1/ 2/85	6	20.0	0.103
1/ 2/85	6	30.0	0.103
1/ 2/85	6	40.0	0.056
1/ 2/85	6	50.0	0.057
1/ 2/85	6	60.0	0.057
1/ 2/85	7	10.0	0.010
1/ 2/85	7	20.0	0.004
1/ 2/85	7	30.0	0.002
1/ 2/85	7	40.0	0.001
1/ 2/85	7	50.0	0.001
1/ 2/85	7	60.0	0.001
1/ 2/85	8	10.0	0.000
1/ 2/85	8	20.0	0.000
1/ 2/85	8	30.0	0.000
1/ 2/85	8	40.0	0.000
1/ 2/85	8	50.0	0.000
1/ 2/85	8	60.0	0.000
1/ 2/85	9	10.0	0.000
1/ 2/85	9	20.0	0.000
1/ 2/85	9	30.0	0.000
1/ 2/85	9	40.0	0.000
1/ 2/85	9	50.0	0.000
1/ 2/85	9	60.0	0.000
1/ 2/85	10	10.0	0.000
1/ 2/85	10	20.0	0.000
1/ 2/85	10	30.0	0.000
1/ 2/85	10	40.0	0.000
1/ 2/85	10	50.0	0.000
1/ 2/85	10	60.0	0.000
1/ 2/85	11	10.0	0.000
1/ 2/85	11	20.0	0.000
1/ 2/85	11	30.0	0.000
1/ 2/85	11	40.0	0.000
1/ 2/85	11	50.0	0.000

1

MAIN SYSTEM M1

1 YR. DESIGN STORM

SUMMARY OF QUANTITY RESULTS (INFLOW IN CFS) AT LOCATION 18

DATE TIME FLOW

MO/DA/YR	HR:MIN	CFS
1/ 2/85	11 60.0	0.000
1/ 2/85	12 10.0	0.000
1/ 2/85	12 20.0	0.000
1/ 2/85	12 30.0	0.000
1/ 2/85	12 40.0	0.000
1/ 2/85	12 50.0	0.000
1/ 2/85	12 60.0	0.000
1/ 2/85	13 10.0	0.000
1/ 2/85	13 20.0	0.000
1/ 2/85	13 30.0	0.000
1/ 2/85	13 40.0	0.000
1/ 2/85	13 50.0	0.000
1/ 2/85	13 60.0	0.000
1/ 2/85	14 10.0	0.000
1/ 2/85	14 20.0	0.000
1/ 2/85	14 30.0	0.000
1/ 2/85	14 40.0	0.000
1/ 2/85	14 50.0	0.000
1/ 2/85	14 60.0	0.000
1/ 2/85	15 10.0	0.000
1/ 2/85	15 20.0	0.000
1/ 2/85	15 30.0	0.000
1/ 2/85	15 40.0	0.000
1/ 2/85	15 50.0	0.000
1/ 2/85	15 60.0	0.000
1/ 2/85	16 10.0	0.000
1/ 2/85	16 20.0	0.000
1/ 2/85	16 30.0	0.000
1/ 2/85	16 40.0	0.000
1/ 2/85	16 50.0	0.000
1/ 2/85	16 60.0	0.000
1/ 2/85	17 10.0	0.000
1/ 2/85	17 20.0	0.000
1/ 2/85	17 30.0	0.000
1/ 2/85	17 40.0	0.000
1/ 2/85	17 50.0	0.000
1/ 2/85	17 60.0	0.000
1/ 2/85	18 10.0	0.000
1/ 2/85	18 20.0	0.000
1/ 2/85	18 30.0	0.000
1/ 2/85	18 40.0	0.000
1/ 2/85	18 50.0	0.000
1/ 2/85	18 60.0	0.000
1/ 2/85	19 10.0	0.000
1/ 2/85	19 20.0	0.000
1/ 2/85	19 30.0	0.000
1/ 2/85	19 40.0	0.000
1/ 2/85	19 50.0	0.000
1/ 2/85	19 60.0	0.000

FLOW WT'D MEANS

+ 0.116

FLOW WT'D STD-DEVS
+ 2.809

TOTAL LOADS
+ 10412.688
CUB-FT
1
MAIN SYSTEM M1

1 YR. DESIGN STORM

SUMMARY OF QUANTITY RESULTS (INFLOW IN CFS) AT LOCATION 29

DATE MO/DA/YR	TIME HR:MIN	FLOW CFS
1/ 1/85	19 10.0	0.007
1/ 1/85	19 20.0	0.013
1/ 1/85	19 30.0	0.016
1/ 1/85	19 40.0	0.027
1/ 1/85	19 50.0	0.030
1/ 1/85	19 60.0	0.055
1/ 1/85	20 10.0	0.104
1/ 1/85	20 20.0	0.119
1/ 1/85	20 30.0	0.121
1/ 1/85	20 40.0	0.145
1/ 1/85	20 50.0	0.149
1/ 1/85	20 60.0	0.149
1/ 1/85	21 10.0	0.149
1/ 1/85	21 20.0	0.149
1/ 1/85	21 30.0	0.149
1/ 1/85	21 40.0	0.199
1/ 1/85	21 50.0	0.203
1/ 1/85	21 60.0	0.203
1/ 1/85	22 10.0	0.203
1/ 1/85	22 20.0	0.203
1/ 1/85	22 30.0	0.203
1/ 1/85	22 40.0	0.270
1/ 1/85	22 50.0	0.271
1/ 1/85	22 60.0	0.271
1/ 1/85	23 10.0	0.271
1/ 1/85	23 20.0	0.271
1/ 1/85	23 30.0	0.271
1/ 1/85	23 40.0	0.446
1/ 1/85	23 50.0	0.433
1/ 1/85	23 60.0	0.434
1/ 2/85	0 10.0	0.434
1/ 2/85	0 20.0	0.434
1/ 2/85	0 30.0	0.434

1/ 2/85	0 40.0	1.193
1/ 2/85	0 50.0	0.990
1/ 2/85	0 60.0	1.041
1/ 2/85	1 10.0	1.028
1/ 2/85	1 20.0	1.031
1/ 2/85	1 30.0	1.031
1/ 2/85	1 40.0	0.372
1/ 2/85	1 50.0	0.439
1/ 2/85	1 60.0	0.433
1/ 2/85	2 10.0	0.434
1/ 2/85	2 20.0	0.434
1/ 2/85	2 30.0	0.434
1/ 2/85	2 40.0	0.269
1/ 2/85	2 50.0	0.271
1/ 2/85	2 60.0	0.271
1/ 2/85	3 10.0	0.271
1/ 2/85	3 20.0	0.271
1/ 2/85	3 30.0	0.271

1

MAIN SYSTEM M1

1 YR. DESIGN STORM

SUMMARY OF QUANTITY RESULTS (INFLOW IN CFS) AT LOCATION 29

DATE MO/DA/YR	TIME HR:MIN	FLOW CFS
1/ 2/85	3 40.0	0.207
1/ 2/85	3 50.0	0.204
1/ 2/85	3 60.0	0.203
1/ 2/85	4 10.0	0.203
1/ 2/85	4 20.0	0.203
1/ 2/85	4 30.0	0.203
1/ 2/85	4 40.0	0.155
1/ 2/85	4 50.0	0.150
1/ 2/85	4 60.0	0.149
1/ 2/85	5 10.0	0.149
1/ 2/85	5 20.0	0.149
1/ 2/85	5 30.0	0.149
1/ 2/85	5 40.0	0.126
1/ 2/85	5 50.0	0.123
1/ 2/85	5 60.0	0.122
1/ 2/85	6 10.0	0.122
1/ 2/85	6 20.0	0.122
1/ 2/85	6 30.0	0.122
1/ 2/85	6 40.0	0.080
1/ 2/85	6 50.0	0.071
1/ 2/85	6 60.0	0.069
1/ 2/85	7 10.0	0.026
1/ 2/85	7 20.0	0.013

1/ 2/85	7 30.0	0.008
1/ 2/85	7 40.0	0.005
1/ 2/85	7 50.0	0.003
1/ 2/85	7 60.0	0.002
1/ 2/85	8 10.0	0.002
1/ 2/85	8 20.0	0.001
1/ 2/85	8 30.0	0.001
1/ 2/85	8 40.0	0.001
1/ 2/85	8 50.0	0.001
1/ 2/85	8 60.0	0.001
1/ 2/85	9 10.0	0.001
1/ 2/85	9 20.0	0.000
1/ 2/85	9 30.0	0.000
1/ 2/85	9 40.0	0.000
1/ 2/85	9 50.0	0.000
1/ 2/85	9 60.0	0.000
1/ 2/85	10 10.0	0.000
1/ 2/85	10 20.0	0.000
1/ 2/85	10 30.0	0.000
1/ 2/85	10 40.0	0.000
1/ 2/85	10 50.0	0.000
1/ 2/85	10 60.0	0.000
1/ 2/85	11 10.0	0.000
1/ 2/85	11 20.0	0.000
1/ 2/85	11 30.0	0.000
1/ 2/85	11 40.0	0.000
1/ 2/85	11 50.0	0.000

1

MAIN SYSTEM M1

1 YR. DESIGN STORM

SUMMARY OF QUANTITY RESULTS (INFLOW IN CFS) AT LOCATION 29

DATE MO/DA/YR	TIME HR:MIN	FLOW CFS
1/ 2/85	11 60.0	0.000
1/ 2/85	12 10.0	0.000
1/ 2/85	12 20.0	0.000
1/ 2/85	12 30.0	0.000
1/ 2/85	12 40.0	0.000
1/ 2/85	12 50.0	0.000
1/ 2/85	12 60.0	0.000
1/ 2/85	13 10.0	0.000
1/ 2/85	13 20.0	0.000
1/ 2/85	13 30.0	0.000
1/ 2/85	13 40.0	0.000
1/ 2/85	13 50.0	0.000
1/ 2/85	13 60.0	0.000
1/ 2/85	14 10.0	0.000

```
  1/ 2/85  14 20.0     0.000
  1/ 2/85  14 30.0     0.000
  1/ 2/85  14 40.0     0.000
  1/ 2/85  14 50.0     0.000
  1/ 2/85  14 60.0     0.000
  1/ 2/85  15 10.0     0.000
  1/ 2/85  15 20.0     0.000
  1/ 2/85  15 30.0     0.000
  1/ 2/85  15 40.0     0.000
  1/ 2/85  15 50.0     0.000
  1/ 2/85  15 60.0     0.000
  1/ 2/85  16 10.0     0.000
  1/ 2/85  16 20.0     0.000
  1/ 2/85  16 30.0     0.000
  1/ 2/85  16 40.0     0.000
  1/ 2/85  16 50.0     0.000
  1/ 2/85  16 60.0     0.000
  1/ 2/85  17 10.0     0.000
  1/ 2/85  17 20.0     0.000
  1/ 2/85  17 30.0     0.000
  1/ 2/85  17 40.0     0.000
  1/ 2/85  17 50.0     0.000
  1/ 2/85  17 60.0     0.000
  1/ 2/85  18 10.0     0.000
  1/ 2/85  18 20.0     0.000
  1/ 2/85  18 30.0     0.000
  1/ 2/85  18 40.0     0.000
  1/ 2/85  18 50.0     0.000
  1/ 2/85  18 60.0     0.000
  1/ 2/85  19 10.0     0.000
  1/ 2/85  19 20.0     0.000
  1/ 2/85  19 30.0     0.000
  1/ 2/85  19 40.0     0.000
  1/ 2/85  19 50.0     0.000
  1/ 2/85  19 60.0     0.000

 FLOW WT'D MEANS
+                 0.137

 FLOW WT'D STD-DEVS
+                 3.267

 TOTAL LOADS
+              12285.771
                 CUB-FT
1
   MAIN SYSTEM M1

                    1 YR. DESIGN STORM


   SUMMARY OF QUANTITY RESULTS ( INFLOW IN CFS) AT LOCATION    39
```

DATE MO/DA/YR	TIME HR:MIN	FLOW CFS
1/ 1/85	19 10.0	0.002
1/ 1/85	19 20.0	0.005
1/ 1/85	19 30.0	0.006
1/ 1/85	19 40.0	0.010
1/ 1/85	19 50.0	0.012
1/ 1/85	19 60.0	0.019
1/ 1/85	20 10.0	0.037
1/ 1/85	20 20.0	0.047
1/ 1/85	20 30.0	0.050
1/ 1/85	20 40.0	0.060
1/ 1/85	20 50.0	0.062
1/ 1/85	20 60.0	0.063
1/ 1/85	21 10.0	0.063
1/ 1/85	21 20.0	0.063
1/ 1/85	21 30.0	0.063
1/ 1/85	21 40.0	0.081
1/ 1/85	21 50.0	0.085
1/ 1/85	21 60.0	0.086
1/ 1/85	22 10.0	0.086
1/ 1/85	22 20.0	0.086
1/ 1/85	22 30.0	0.086
1/ 1/85	22 40.0	0.110
1/ 1/85	22 50.0	0.114
1/ 1/85	22 60.0	0.115
1/ 1/85	23 10.0	0.115
1/ 1/85	23 20.0	0.115
1/ 1/85	23 30.0	0.115
1/ 1/85	23 40.0	0.179
1/ 1/85	23 50.0	0.184
1/ 1/85	23 60.0	0.184
1/ 2/85	0 10.0	0.184
1/ 2/85	0 20.0	0.184
1/ 2/85	0 30.0	0.184
1/ 2/85	0 40.0	0.465
1/ 2/85	0 50.0	0.433
1/ 2/85	0 60.0	0.437
1/ 2/85	1 10.0	0.437
1/ 2/85	1 20.0	0.437
1/ 2/85	1 30.0	0.437
1/ 2/85	1 40.0	0.183
1/ 2/85	1 50.0	0.184
1/ 2/85	1 60.0	0.184
1/ 2/85	2 10.0	0.184
1/ 2/85	2 20.0	0.184
1/ 2/85	2 30.0	0.184
1/ 2/85	2 40.0	0.122
1/ 2/85	2 50.0	0.116
1/ 2/85	2 60.0	0.115

1/ 2/85	3 10.0	0.115
1/ 2/85	3 20.0	0.115
1/ 2/85	3 30.0	0.115

1

MAIN SYSTEM M1

1 YR. DESIGN STORM

SUMMARY OF QUANTITY RESULTS (INFLOW IN CFS) AT LOCATION 39

DATE MO/DA/YR	TIME HR:MIN	FLOW CFS
1/ 2/85	3 40.0	0.091
1/ 2/85	3 50.0	0.087
1/ 2/85	3 60.0	0.086
1/ 2/85	4 10.0	0.086
1/ 2/85	4 20.0	0.086
1/ 2/85	4 30.0	0.086
1/ 2/85	4 40.0	0.068
1/ 2/85	4 50.0	0.065
1/ 2/85	4 60.0	0.064
1/ 2/85	5 10.0	0.063
1/ 2/85	5 20.0	0.063
1/ 2/85	5 30.0	0.063
1/ 2/85	5 40.0	0.055
1/ 2/85	5 50.0	0.053
1/ 2/85	5 60.0	0.052
1/ 2/85	6 10.0	0.052
1/ 2/85	6 20.0	0.052
1/ 2/85	6 30.0	0.052
1/ 2/85	6 40.0	0.036
1/ 2/85	6 50.0	0.032
1/ 2/85	6 60.0	0.030
1/ 2/85	7 10.0	0.014
1/ 2/85	7 20.0	0.008
1/ 2/85	7 30.0	0.005
1/ 2/85	7 40.0	0.003
1/ 2/85	7 50.0	0.002
1/ 2/85	7 60.0	0.002
1/ 2/85	8 10.0	0.001
1/ 2/85	8 20.0	0.001
1/ 2/85	8 30.0	0.001
1/ 2/85	8 40.0	0.001
1/ 2/85	8 50.0	0.001
1/ 2/85	8 60.0	0.000
1/ 2/85	9 10.0	0.000
1/ 2/85	9 20.0	0.000
1/ 2/85	9 30.0	0.000
1/ 2/85	9 40.0	0.000
1/ 2/85	9 50.0	0.000

1/ 2/85	9 60.0	0.000
1/ 2/85	10 10.0	0.000
1/ 2/85	10 20.0	0.000
1/ 2/85	10 30.0	0.000
1/ 2/85	10 40.0	0.000
1/ 2/85	10 50.0	0.000
1/ 2/85	10 60.0	0.000
1/ 2/85	11 10.0	0.000
1/ 2/85	11 20.0	0.000
1/ 2/85	11 30.0	0.000
1/ 2/85	11 40.0	0.000
1/ 2/85	11 50.0	0.000

1

MAIN SYSTEM M1

1 YR. DESIGN STORM

SUMMARY OF QUANTITY RESULTS (INFLOW IN CFS) AT LOCATION 39

DATE MO/DA/YR	TIME HR:MIN	FLOW CFS
1/ 2/85	11 60.0	0.000
1/ 2/85	12 10.0	0.000
1/ 2/85	12 20.0	0.000
1/ 2/85	12 30.0	0.000
1/ 2/85	12 40.0	0.000
1/ 2/85	12 50.0	0.000
1/ 2/85	12 60.0	0.000
1/ 2/85	13 10.0	0.000
1/ 2/85	13 20.0	0.000
1/ 2/85	13 30.0	0.000
1/ 2/85	13 40.0	0.000
1/ 2/85	13 50.0	0.000
1/ 2/85	13 60.0	0.000
1/ 2/85	14 10.0	0.000
1/ 2/85	14 20.0	0.000
1/ 2/85	14 30.0	0.000
1/ 2/85	14 40.0	0.000
1/ 2/85	14 50.0	0.000
1/ 2/85	14 60.0	0.000
1/ 2/85	15 10.0	0.000
1/ 2/85	15 20.0	0.000
1/ 2/85	15 30.0	0.000
1/ 2/85	15 40.0	0.000
1/ 2/85	15 50.0	0.000
1/ 2/85	15 60.0	0.000
1/ 2/85	16 10.0	0.000
1/ 2/85	16 20.0	0.000
1/ 2/85	16 30.0	0.000
1/ 2/85	16 40.0	0.000

1/ 2/85	16 50.0	0.000
1/ 2/85	16 60.0	0.000
1/ 2/85	17 10.0	0.000
1/ 2/85	17 20.0	0.000
1/ 2/85	17 30.0	0.000
1/ 2/85	17 40.0	0.000
1/ 2/85	17 50.0	0.000
1/ 2/85	17 60.0	0.000
1/ 2/85	18 10.0	0.000
1/ 2/85	18 20.0	0.000
1/ 2/85	18 30.0	0.000
1/ 2/85	18 40.0	0.000
1/ 2/85	18 50.0	0.000
1/ 2/85	18 60.0	0.000
1/ 2/85	19 10.0	0.000
1/ 2/85	19 20.0	0.000
1/ 2/85	19 30.0	0.000
1/ 2/85	19 40.0	0.000
1/ 2/85	19 50.0	0.000
1/ 2/85	19 60.0	0.000

FLOW WT'D MEANS
+ 0.058

FLOW WT'D STD-DEVS
+ 1.375

TOTAL LOADS
+ 5200.182
CUB-FT
1
MAIN SYSTEM M1

1 YR. DESIGN STORM

SUMMARY OF QUANTITY RESULTS (INFLOW IN CFS) AT LOCATION 33

DATE MO/DA/YR	TIME HR:MIN	FLOW CFS
1/ 1/85	19 10.0	0.006
1/ 1/85	19 20.0	0.014
1/ 1/85	19 30.0	0.018
1/ 1/85	19 40.0	0.031
1/ 1/85	19 50.0	0.035
1/ 1/85	19 60.0	0.058
1/ 1/85	20 10.0	0.112
1/ 1/85	20 20.0	0.138
1/ 1/85	20 30.0	0.146
1/ 1/85	20 40.0	0.173
1/ 1/85	20 50.0	0.180

1/ 1/85	20	60.0	0.181
1/ 1/85	21	10.0	0.182
1/ 1/85	21	20.0	0.182
1/ 1/85	21	30.0	0.182
1/ 1/85	21	40.0	0.235
1/ 1/85	21	50.0	0.246
1/ 1/85	21	60.0	0.247
1/ 1/85	22	10.0	0.248
1/ 1/85	22	20.0	0.248
1/ 1/85	22	30.0	0.248
1/ 1/85	22	40.0	0.319
1/ 1/85	22	50.0	0.329
1/ 1/85	22	60.0	0.330
1/ 1/85	23	10.0	0.330
1/ 1/85	23	20.0	0.330
1/ 1/85	23	30.0	0.330
1/ 1/85	23	40.0	0.520
1/ 1/85	23	50.0	0.528
1/ 1/85	23	60.0	0.529
1/ 2/85	0	10.0	0.529
1/ 2/85	0	20.0	0.529
1/ 2/85	0	30.0	0.529
1/ 2/85	0	40.0	1.362
1/ 2/85	0	50.0	1.239
1/ 2/85	0	60.0	1.258
1/ 2/85	1	10.0	1.255
1/ 2/85	1	20.0	1.255
1/ 2/85	1	30.0	1.255
1/ 2/85	1	40.0	0.509
1/ 2/85	1	50.0	0.528
1/ 2/85	1	60.0	0.529
1/ 2/85	2	10.0	0.529
1/ 2/85	2	20.0	0.529
1/ 2/85	2	30.0	0.529
1/ 2/85	2	40.0	0.345
1/ 2/85	2	50.0	0.332
1/ 2/85	2	60.0	0.331
1/ 2/85	3	10.0	0.330
1/ 2/85	3	20.0	0.330
1/ 2/85	3	30.0	0.330

1

MAIN SYSTEM M1

1 YR. DESIGN STORM

SUMMARY OF QUANTITY RESULTS (INFLOW IN CFS) AT LOCATION 33

DATE MO/DA/YR	TIME HR:MIN	FLOW CFS
1/ 2/85	3 40.0	0.260

1/ 2/85	3	50.0	0.250
1/ 2/85	3	60.0	0.248
1/ 2/85	4	10.0	0.248
1/ 2/85	4	20.0	0.248
1/ 2/85	4	30.0	0.248
1/ 2/85	4	40.0	0.195
1/ 2/85	4	50.0	0.185
1/ 2/85	4	60.0	0.182
1/ 2/85	5	10.0	0.182
1/ 2/85	5	20.0	0.182
1/ 2/85	5	30.0	0.182
1/ 2/85	5	40.0	0.157
1/ 2/85	5	50.0	0.151
1/ 2/85	5	60.0	0.149
1/ 2/85	6	10.0	0.149
1/ 2/85	6	20.0	0.149
1/ 2/85	6	30.0	0.149
1/ 2/85	6	40.0	0.103
1/ 2/85	6	50.0	0.090
1/ 2/85	6	60.0	0.085
1/ 2/85	7	10.0	0.037
1/ 2/85	7	20.0	0.020
1/ 2/85	7	30.0	0.013
1/ 2/85	7	40.0	0.008
1/ 2/85	7	50.0	0.006
1/ 2/85	7	60.0	0.004
1/ 2/85	8	10.0	0.003
1/ 2/85	8	20.0	0.003
1/ 2/85	8	30.0	0.002
1/ 2/85	8	40.0	0.002
1/ 2/85	8	50.0	0.001
1/ 2/85	8	60.0	0.001
1/ 2/85	9	10.0	0.001
1/ 2/85	9	20.0	0.001
1/ 2/85	9	30.0	0.001
1/ 2/85	9	40.0	0.001
1/ 2/85	9	50.0	0.001
1/ 2/85	9	60.0	0.001
1/ 2/85	10	10.0	0.000
1/ 2/85	10	20.0	0.000
1/ 2/85	10	30.0	0.000
1/ 2/85	10	40.0	0.000
1/ 2/85	10	50.0	0.000
1/ 2/85	10	60.0	0.000
1/ 2/85	11	10.0	0.000
1/ 2/85	11	20.0	0.000
1/ 2/85	11	30.0	0.000
1/ 2/85	11	40.0	0.000
1/ 2/85	11	50.0	0.000

1

MAIN SYSTEM M1

1 YR. DESIGN STORM

SUMMARY OF QUANTITY RESULTS (INFLOW IN CFS) AT LOCATION 33

DATE MO/DA/YR	TIME HR:MIN	FLOW CFS
1/ 2/85	11 60.0	0.000
1/ 2/85	12 10.0	0.000
1/ 2/85	12 20.0	0.000
1/ 2/85	12 30.0	0.000
1/ 2/85	12 40.0	0.000
1/ 2/85	12 50.0	0.000
1/ 2/85	12 60.0	0.000
1/ 2/85	13 10.0	0.000
1/ 2/85	13 20.0	0.000
1/ 2/85	13 30.0	0.000
1/ 2/85	13 40.0	0.000
1/ 2/85	13 50.0	0.000
1/ 2/85	13 60.0	0.000
1/ 2/85	14 10.0	0.000
1/ 2/85	14 20.0	0.000
1/ 2/85	14 30.0	0.000
1/ 2/85	14 40.0	0.000
1/ 2/85	14 50.0	0.000
1/ 2/85	14 60.0	0.000
1/ 2/85	15 10.0	0.000
1/ 2/85	15 20.0	0.000
1/ 2/85	15 30.0	0.000
1/ 2/85	15 40.0	0.000
1/ 2/85	15 50.0	0.000
1/ 2/85	15 60.0	0.000
1/ 2/85	16 10.0	0.000
1/ 2/85	16 20.0	0.000
1/ 2/85	16 30.0	0.000
1/ 2/85	16 40.0	0.000
1/ 2/85	16 50.0	0.000
1/ 2/85	16 60.0	0.000
1/ 2/85	17 10.0	0.000
1/ 2/85	17 20.0	0.000
1/ 2/85	17 30.0	0.000
1/ 2/85	17 40.0	0.000
1/ 2/85	17 50.0	0.000
1/ 2/85	17 60.0	0.000
1/ 2/85	18 10.0	0.000
1/ 2/85	18 20.0	0.000
1/ 2/85	18 30.0	0.000
1/ 2/85	18 40.0	0.000
1/ 2/85	18 50.0	0.000
1/ 2/85	18 60.0	0.000
1/ 2/85	19 10.0	0.000

1/ 2/85	19	20.0	0.000
1/ 2/85	19	30.0	0.000
1/ 2/85	19	40.0	0.000
1/ 2/85	19	50.0	0.000
1/ 2/85	19	60.0	0.000

FLOW WT'D MEANS
+ 0.166

FLOW WT'D STD-DEVS
+ 3.958

TOTAL LOADS
+ 14947.521
CUB-FT
1
MAIN SYSTEM M1

1 YR. DESIGN STORM

SUMMARY OF QUANTITY RESULTS (INFLOW IN CFS) AT LOCATION 37

DATE MO/DA/YR	TIME HR:MIN	FLOW CFS
1/ 1/85	19 10.0	0.004
1/ 1/85	19 20.0	0.006
1/ 1/85	19 30.0	0.007
1/ 1/85	19 40.0	0.012
1/ 1/85	19 50.0	0.012
1/ 1/85	19 60.0	0.029
1/ 1/85	20 10.0	0.047
1/ 1/85	20 20.0	0.048
1/ 1/85	20 30.0	0.048
1/ 1/85	20 40.0	0.059
1/ 1/85	20 50.0	0.058
1/ 1/85	20 60.0	0.058
1/ 1/85	21 10.0	0.058
1/ 1/85	21 20.0	0.058
1/ 1/85	21 30.0	0.058
1/ 1/85	21 40.0	0.082
1/ 1/85	21 50.0	0.079
1/ 1/85	21 60.0	0.079
1/ 1/85	22 10.0	0.079
1/ 1/85	22 20.0	0.079
1/ 1/85	22 30.0	0.079
1/ 1/85	22 40.0	0.110
1/ 1/85	22 50.0	0.105
1/ 1/85	22 60.0	0.106
1/ 1/85	23 10.0	0.106
1/ 1/85	23 20.0	0.106

1/ 1/85	23 30.0	0.106
1/ 1/85	23 40.0	0.186
1/ 1/85	23 50.0	0.165
1/ 1/85	23 60.0	0.171
1/ 2/85	0 10.0	0.169
1/ 2/85	0 20.0	0.169
1/ 2/85	0 30.0	0.169
1/ 2/85	0 40.0	0.514
1/ 2/85	0 50.0	0.359
1/ 2/85	0 60.0	0.420
1/ 2/85	1 10.0	0.395
1/ 2/85	1 20.0	0.405
1/ 2/85	1 30.0	0.401
1/ 2/85	1 40.0	0.118
1/ 2/85	1 50.0	0.183
1/ 2/85	1 60.0	0.166
1/ 2/85	2 10.0	0.170
1/ 2/85	2 20.0	0.169
1/ 2/85	2 30.0	0.169
1/ 2/85	2 40.0	0.095
1/ 2/85	2 50.0	0.108
1/ 2/85	2 60.0	0.106
1/ 2/85	3 10.0	0.106
1/ 2/85	3 20.0	0.106
1/ 2/85	3 30.0	0.106

1

MAIN SYSTEM M1

1 YR. DESIGN STORM

SUMMARY OF QUANTITY RESULTS (INFLOW IN CFS) AT LOCATION 37

DATE MO/DA/YR	TIME HR:MIN	FLOW CFS
1/ 2/85	3 40.0	0.076
1/ 2/85	3 50.0	0.080
1/ 2/85	3 60.0	0.079
1/ 2/85	4 10.0	0.079
1/ 2/85	4 20.0	0.079
1/ 2/85	4 30.0	0.079
1/ 2/85	4 40.0	0.057
1/ 2/85	4 50.0	0.058
1/ 2/85	4 60.0	0.058
1/ 2/85	5 10.0	0.058
1/ 2/85	5 20.0	0.058
1/ 2/85	5 30.0	0.058
1/ 2/85	5 40.0	0.047
1/ 2/85	5 50.0	0.048
1/ 2/85	5 60.0	0.048
1/ 2/85	6 10.0	0.048

1/ 2/85	6	20.0	0.048
1/ 2/85	6	30.0	0.048
1/ 2/85	6	40.0	0.028
1/ 2/85	6	50.0	0.027
1/ 2/85	6	60.0	0.026
1/ 2/85	7	10.0	0.007
1/ 2/85	7	20.0	0.003
1/ 2/85	7	30.0	0.002
1/ 2/85	7	40.0	0.001
1/ 2/85	7	50.0	0.001
1/ 2/85	7	60.0	0.000
1/ 2/85	8	10.0	0.000
1/ 2/85	8	20.0	0.000
1/ 2/85	8	30.0	0.000
1/ 2/85	8	40.0	0.000
1/ 2/85	8	50.0	0.000
1/ 2/85	8	60.0	0.000
1/ 2/85	9	10.0	0.000
1/ 2/85	9	20.0	0.000
1/ 2/85	9	30.0	0.000
1/ 2/85	9	40.0	0.000
1/ 2/85	9	50.0	0.000
1/ 2/85	9	60.0	0.000
1/ 2/85	10	10.0	0.000
1/ 2/85	10	20.0	0.000
1/ 2/85	10	30.0	0.000
1/ 2/85	10	40.0	0.000
1/ 2/85	10	50.0	0.000
1/ 2/85	10	60.0	0.000
1/ 2/85	11	10.0	0.000
1/ 2/85	11	20.0	0.000
1/ 2/85	11	30.0	0.000
1/ 2/85	11	40.0	0.000
1/ 2/85	11	50.0	0.000

1

MAIN SYSTEM M1

1 YR. DESIGN STORM

SUMMARY OF QUANTITY RESULTS (INFLOW IN CFS) AT LOCATION 37

DATE MO/DA/YR	TIME HR:MIN		FLOW CFS
1/ 2/85	11	60.0	0.000
1/ 2/85	12	10.0	0.000
1/ 2/85	12	20.0	0.000
1/ 2/85	12	30.0	0.000
1/ 2/85	12	40.0	0.000
1/ 2/85	12	50.0	0.000
1/ 2/85	12	60.0	0.000

1/ 2/85	13	10.0	0.000
1/ 2/85	13	20.0	0.000
1/ 2/85	13	30.0	0.000
1/ 2/85	13	40.0	0.000
1/ 2/85	13	50.0	0.000
1/ 2/85	13	60.0	0.000
1/ 2/85	14	10.0	0.000
1/ 2/85	14	20.0	0.000
1/ 2/85	14	30.0	0.000
1/ 2/85	14	40.0	0.000
1/ 2/85	14	50.0	0.000
1/ 2/85	14	60.0	0.000
1/ 2/85	15	10.0	0.000
1/ 2/85	15	20.0	0.000
1/ 2/85	15	30.0	0.000
1/ 2/85	15	40.0	0.000
1/ 2/85	15	50.0	0.000
1/ 2/85	15	60.0	0.000
1/ 2/85	16	10.0	0.000
1/ 2/85	16	20.0	0.000
1/ 2/85	16	30.0	0.000
1/ 2/85	16	40.0	0.000
1/ 2/85	16	50.0	0.000
1/ 2/85	16	60.0	0.000
1/ 2/85	17	10.0	0.000
1/ 2/85	17	20.0	0.000
1/ 2/85	17	30.0	0.000
1/ 2/85	17	40.0	0.000
1/ 2/85	17	50.0	0.000
1/ 2/85	17	60.0	0.000
1/ 2/85	18	10.0	0.000
1/ 2/85	18	20.0	0.000
1/ 2/85	18	30.0	0.000
1/ 2/85	18	40.0	0.000
1/ 2/85	18	50.0	0.000
1/ 2/85	18	60.0	0.000
1/ 2/85	19	10.0	0.000
1/ 2/85	19	20.0	0.000
1/ 2/85	19	30.0	0.000
1/ 2/85	19	40.0	0.000
1/ 2/85	19	50.0	0.000
1/ 2/85	19	60.0	0.000

FLOW WT'D MEANS
+ 0.053

FLOW WT'D STD-DEVS
+ 1.289

TOTAL LOADS
+ 4806.407
CUB-FT

```
 * * * * *  RUNOFF SIMULATION ENDED NORMALLY  * * * * *
1COMBINE            BLOCK CALLED.
1


                          M E T C A L F  &  E D D Y ,  I N C .
0                      S T O R M  W A T E R  M A N A G E M E N T  M O D E L

0

                                RUN NO.    0   DATE

                               MAIN SYSTEM M1
0                M3,M2 INTO M1
0                                C O M B I N E  B L O C K
1METCALF & EDDY, INC.          S T O R M W A T E R   M A N A G E M E N T  M O D E L                    PAGE    1
0                                  RUN NO.  0            MAIN SYSTEM M1
0E X E C U T I O N  C O N T R O L  D A T A
---------------------------------------------
0NUMBER OF TIME STEPS       150
 NUMBER OF OUTPUT MH        38
 NUMBER  POLLUTANTS         0
 TIME STEP LENGTH(SEC)      600
 START TIME     19.00
 NUMBER INPUT FILES         3
0INPUT FILES    8   10   12
 M3DES1.HYD     M2DES1.HYD
0NON-CONDUIT ELEMENTS SAVED (LISTED IN ORDER)
   333  222  103  101   99   97   95   93   89   91   87   81   85  124   22   58

    20   79   73   71   83   67   65   63    6    4    8   10   54   56   46   44

    14   18   29   39   33   37
 FILE COMPLETE --    8
 FILE COMPLETE --   10
 FILE COMPLETE --   12
 INPUT PHASE COMPLETE
0'COMBINE' NORMAL TERMINATION -- OUTPUT TAPE COMPLETE
1TRANSPORT          BLOCK CALLED.
1
```

M E T C A L F & E D D Y , I N C .
0 S T O R M W A T E R M A N A G E M E N T M O D E L

0

RUN NO. 0 DATE

1 MAIN SYSTEM M1 1 YR. DESIGN STORM
O T R A N S P O R T B L O C K
1METCALF & EDDY, INC. S T O R M W A T E R M A N A G E M E N T M O D E L PAGE 2
0 RUN NO. 0 1 MAIN SYSTEM M1 1 YR. DESIGN STORM
0E X E C U T I O N C O N T R O L D A T A

0NUMBER OF SEWER ELEMENTS 109
0NUMBER OF TIME STEPS 150
0NUMBER OF NON-CONDUITS RECEIVING INPUT 38
0NUMBER OF INPUTS TO BE PRINTED 2
0NUMBER OF OUTPUTS TO BE PRINTED 13
0NUMBER OF NON-CONDUITS TRANSFERRED TO NEXT BLOCK 3
0NUMBER OF POLLUTANTS 0
0NUMBER OF ITERATIONS IN ROUTING 4
0SIZE OF TIME STEP FOR COMPUTATIONS (SEC) 600.00
0CONVERGENCE ERROR ALLOWED 0.0001
0DRY WEATHER DAYS PRIOR TO STORM 3.0
1METCALF & EDDY, INC. S T O R M W A T E R M A N A G E M E N T M O D E L PAGE 3
0 RUN NO. 0 1 MAIN SYSTEM M1 1 YR. DESIGN STORM
OE L E M E N T D A T A

OEXT. ELE.	UPSTREAM ELEMENTS				TYPE DESCRIPTION	SLOPE (FT/FT)	DISTANCE (FT)	MANNING ROUGHNESS	GEOM1 (FT)	GEOM2 (FT)	GEOM3 (FT)	NUMBER BARRELS	SURCHRG (FT)	SUPER CRITICAL	INVERT DIFF(FT)
199	3	0	0	16	MANHOLE	0.00000	0.00	0.0000	0.000	0.000	0.000	1.0	0.0		
3	4	0	0	3	EGG-SHAPED	0.00380	140.00	0.0150	3.500	0.000	0.000	1.0	12.4	NO	
4	5	0	0	16	MANHOLE	0.00000	0.00	0.0000	0.000	0.000	0.000	1.0	0.0		
5	6	0	0	3	EGG-SHAPED	0.00360	225.00	0.0150	3.500	0.000	0.000	1.0	11.5	NO	
6	7	62	0	16	MANHOLE	0.00000	0.00	0.0000	0.000	0.000	0.000	1.0	0.0		
7	8	0	0	3	EGG-SHAPED	0.00730	165.00	0.0150	3.500	0.000	0.000	1.0	10.5	NO	
8	9	0	0	16	MANHOLE	0.00000	0.00	0.0000	0.000	0.000	0.000	1.0	0.0		
9	10	0	0	3	EGG-SHAPED	0.00140	440.00	0.0150	3.500	0.000	0.000	1.0	9.4	NO	
10	11	0	0	16	MANHOLE	0.00000	0.00	0.0000	0.000	0.000	0.000	1.0	0.0		
11	198	0	0	3	EGG-SHAPED	0.00300	130.00	0.0150	3.500	0.000	0.000	1.0	9.3	NO	
198	13	0	0	16	MANHOLE	0.00000	0.00	0.0000	0.000	0.000	0.000	1.0	0.0		
13	14	0	0	3	EGG-SHAPED	0.00350	155.00	0.0150	3.500	0.000	0.000	1.0	9.5	NO	
14	15	41	0	16	MANHOLE	0.00000	0.00	0.0000	0.000	0.000	0.000	1.0	0.0		
15	16	0	0	3	EGG-SHAPED	0.00360	140.00	0.0150	3.170	0.000	0.000	1.0	10.8	NO	
16	17	32	0	16	MANHOLE	0.00000	0.00	0.0000	0.000	0.000	0.000	1.0	0.0		

```
  17   18   0   0  1  CIRCULAR SHAPED  0.00280   720.00   0.0150    1.500  0.000  0.000   1.0    7.6     NO
  18   19   0   0 16  MANHOLE        0.00000     0.00   0.0000    0.000  0.000  0.000   1.0    0.0
  19   20   0   0  1  CIRCULAR SHAPED  0.00360   345.00   0.0150    1.500  0.000  0.000   1.0    7.7     NO
  20   21  24   0 16  MANHOLE        0.00000     0.00   0.0000    0.000  0.000  0.000   1.0    0.0
  21   22   0   0  1  CIRCULAR SHAPED  0.00630   400.00   0.0150    0.667  0.000  0.000   1.0    8.4     NO
  22   23   0   0 16  MANHOLE        0.00000     0.00   0.0000    0.000  0.000  0.000   1.0    0.0
  23  124   0   0  1  CIRCULAR SHAPED  0.00670   330.00   0.0150    0.667  0.000  0.000   1.0    9.1     NO
 124    0   0   0 16  MANHOLE        0.00000     0.00   0.0000    0.000  0.000  0.000   1.0    0.0
  24   25   0   0  1  CIRCULAR SHAPED  0.00430   280.00   0.0150    1.250  0.000  0.000   1.0    7.5     NO
 170  171   0   0 16  MANHOLE        0.00000     0.00   0.0000    0.000  0.000  0.000   1.0    0.0
 171   25   0   0  1  CIRCULAR SHAPED  0.00430    10.00   0.0150    1.500  0.000  0.000   1.0    7.0     NO
  25   26  28   0 20  FLOW DIVIDER     9.65000     3.67   5.0000    1.950  3.450 24.000   1.0    0.0
  26  222   0   0  1  CIRCULAR SHAPED  0.00590   410.00   0.0150    1.500  0.000  0.000   1.0   10.4     NO
 222    0   0   0 16  MANHOLE        0.00000     0.00   0.0000    0.000  0.000  0.000   1.0    0.0
  28   29   0   0  1  CIRCULAR SHAPED  0.00140   360.00   0.0150    1.000  0.000  0.000   1.0    6.4     NO
+                                                                                          0.30
  29   30   0   0 16  MANHOLE        0.00000     0.00   0.0000    0.000  0.000  0.000   1.0    0.0
  30   31   0   0  1  CIRCULAR SHAPED  0.00140   350.00   0.0150    0.667  0.000  0.000   1.0    6.4     NO
  31    0   0   0 16  MANHOLE        0.00000     0.00   0.0000    0.000  0.000  0.000   1.0    0.0
  32   33   0   0  1  CIRCULAR SHAPED  0.02040   205.00   0.0150    2.000  0.000  0.000   1.0    9.7     NO
  33   34  38 140 16  MANHOLE        0.00000     0.00   0.0000    0.000  0.000  0.000   1.0    0.0
  34   35   0   0  1  CIRCULAR SHAPED  0.00180   440.00   0.0150    1.000  0.000  0.000   1.0    8.9     NO
  35   36   0   0 16  MANHOLE        0.00000     0.00   0.0000    0.000  0.000  0.000   1.0    0.0
  36   37   0   0  1  CIRCULAR SHAPED  0.00510   455.00   0.0150    1.000  0.000  0.000   1.0    7.9     NO
  37    0   0   0 16  MANHOLE        0.00000     0.00   0.0000    0.000  0.000  0.000   1.0    0.0
  38   39   0   0  1  CIRCULAR SHAPED  0.00800   200.00   0.0150    0.833  0.000  0.000   1.0    7.9     NO
+                                                                                          0.20
  39    0   0   0 16  MANHOLE        0.00000     0.00   0.0000    0.000  0.000  0.000   1.0    0.0
 140  333   0   0  1  CIRCULAR SHAPED  0.01480   400.00   0.0150    2.000  0.000  0.000   1.0    9.7     NO
 333    0   0   0 16  MANHOLE        0.00000     0.00   0.0000    0.000  0.000  0.000   1.0    0.0
  41   42   0   0  1  CIRCULAR SHAPED  0.00300    80.00   0.0150    1.250  0.000  0.000   1.0    9.5     NO
  42   43  51   0 16  MANHOLE        0.00000     0.00   0.0000    0.000  0.000  0.000   1.0    0.0
  43   44   0   0  1  CIRCULAR SHAPED  0.00040   250.00   0.0150    0.833  0.000  0.000   1.0    9.3     NO
  44   45   0   0 16  MANHOLE        0.00000     0.00   0.0000    0.000  0.000  0.000   1.0    0.0
  45   46   0   0  1  CIRCULAR SHAPED  0.00400   470.00   0.0150    0.833  0.000  0.000   1.0    7.3     NO
  46   47   0   0 16  MANHOLE        0.00000     0.00   0.0000    0.000  0.000  0.000   1.0    0.0
  47   48   0   0  1  CIRCULAR SHAPED  0.00680   295.00   0.0150    0.667  0.000  0.000   1.0    9.3     NO
  48   49   0   0 16  MANHOLE        0.00000     0.00   0.0000    0.000  0.000  0.000   1.0    0.0
1METCALF & EDDY, INC.          S T O R M W A T E R   M A N A G E M E N T  M O D E L                PAGE   4
0                                  RUN NO.  0            1 MAIN SYSTEM M1 1 YR. DESIGN STORM
OE L E M E N T  D A T A
 ------------------------
OEXT.    UPSTREAM    TYPE DESCRIPTION     SLOPE  DISTANCE   MANNING    GEOM1  GEOM2  GEOM3  NUMBER
SURCHRG   SUPER  INVERT
 ELE.    ELEMENTS                    (FT/FT)   (FT)    ROUGHNESS   (FT)   (FT)   (FT)  BARRELS   (FT)  CRITICAL  DIFF(FT)
  49   50   0   0  1  CIRCULAR SHAPED  0.00710   235.00   0.0150    0.667  0.000  0.000   1.0    7.8     NO
  50    0   0   0 16  MANHOLE        0.00000     0.00   0.0000    0.000  0.000  0.000   1.0    0.0
  51   52   0   0  1  CIRCULAR SHAPED  0.00300    65.00   0.0150    1.000  0.000  0.000   1.0   10.1     NO
  52   53  61   0 16  MANHOLE        0.00000     0.00   0.0000    0.000  0.000  0.000   1.0    0.0
  53   54   0   0  1  CIRCULAR SHAPED  0.00400   310.00   0.0150    1.000  0.000  0.000   1.0    7.3     NO
  54   55   0   0 16  MANHOLE        0.00000     0.00   0.0000    0.000  0.000  0.000   1.0    0.0
  55   56   0   0  1  CIRCULAR SHAPED  0.00390   320.00   0.0150    1.000  0.000  0.000   1.0    7.0     NO
```

```
  56   57   0   0 16   MANHOLE        0.00000    0.00  0.0000   0.000 0.000 0.000  1.0    0.0
  57   58   0   0  1   CIRCULAR SHAPED 0.00490  260.00  0.0150   0.833 0.000 0.000  1.0    7.4     NO
  58   59   0   0 16   MANHOLE        0.00000    0.00  0.0000   0.000 0.000 0.000  1.0    0.0
  59   50   0   0  1   CIRCULAR SHAPED 0.00480  230.00  0.0150   0.667 0.000 0.000  1.0    7.8     NO
  61  182   0   0  1   CIRCULAR SHAPED 0.00340  290.00  0.0150   1.000 0.000 0.000  1.0   11.1     NO
 182  183   0   0 16   MANHOLE        0.00000    0.00  0.0000   0.000 0.000 0.000  1.0    0.0
 183   65   0   0  1   CIRCULAR SHAPED 0.00340   10.00  0.0150   1.000 0.000 0.000  1.0   11.1     NO
  62   63   0   0  1   CIRCULAR SHAPED 0.00560  500.00  0.0150   1.250 0.000 0.000  1.0    5.7     NO
  63   64   0   0 16   MANHOLE        0.00000    0.00  0.0000   0.000 0.000 0.000  1.0    0.0
  64  180   0   0  1   CIRCULAR SHAPED 0.00350  490.00  0.0150   1.250 0.000 0.000  1.0    7.5     NO
 180  181   0   0 16   MANHOLE        0.00000    0.00  0.0000   0.000 0.000 0.000  1.0    0.0
 181   65   0   0  1   CIRCULAR SHAPED 0.00350   10.00  0.0150   1.250 0.000 0.000  1.0    7.5     NO
  65   66   0   0 20   FLOW DIVIDER    4.50000    0.90  4.2000   0.500 1.250183.000  1.0    0.0
  66   67   0   0  1   CIRCULAR SHAPED 0.00330   90.00  0.0150   1.000 0.000 0.000  1.0    8.0     NO
  67   68  82   0 16   MANHOLE        0.00000    0.00  0.0000   0.000 0.000 0.000  1.0    0.0
  68   69   0   0  1   CIRCULAR SHAPED 0.00610  250.00  0.0150   0.667 0.000 0.000  1.0    6.7     NO
  69   70  72   0 16   MANHOLE        0.00000    0.00  0.0000   0.000 0.000 0.000  1.0    0.0
  70   71   0   0  1   CIRCULAR SHAPED 0.00630  100.00  0.0150   0.667 0.000 0.000  1.0    5.6     NO
+                                                                                   0.20
  71    0   0   0 16   MANHOLE        0.00000    0.00  0.0000   0.000 0.000 0.000  1.0    0.0
  72   73   0   0  1   CIRCULAR SHAPED 0.00150  250.00  0.0150   0.667 0.000 0.000  1.0    6.7     NO
  73   74   0   0 16   MANHOLE        0.00000    0.00  0.0000   0.000 0.000 0.000  1.0    0.0
  74   75   0   0  1   CIRCULAR SHAPED 0.00780  240.00  0.0150   0.667 0.000 0.000  1.0    7.3     NO
  75   76   0   0 16   MANHOLE        0.00000    0.00  0.0000   0.000 0.000 0.000  1.0    0.0
  76   77   0   0  1   CIRCULAR SHAPED 0.00520  250.00  0.0150   0.667 0.000 0.000  1.0    7.0     NO
  77   78   0   0 16   MANHOLE        0.00000    0.00  0.0000   0.000 0.000 0.000  1.0    0.0
  78   79   0   0  1   CIRCULAR SHAPED 0.00520  250.00  0.0150   0.667 0.000 0.000  1.0    6.9     NO
  79   80   0   0 16   MANHOLE        0.00000    0.00  0.0000   0.000 0.000 0.000  1.0    0.0
  80   81   0   0  1   CIRCULAR SHAPED 0.00520  345.00  0.0150   0.667 0.000 0.000  1.0    6.5     NO
  81    0   0   0 16   MANHOLE        0.00000    0.00  0.0000   0.000 0.000 0.000  1.0    0.0
  82   83   0   0  1   CIRCULAR SHAPED 0.00580  240.00  0.0150   1.250 0.000 0.000  1.0    8.3     NO
  83   84   0   0 16   MANHOLE        0.00000    0.00  0.0000   0.000 0.000 0.000  1.0    0.0
  84   85   0   0  1   CIRCULAR SHAPED 0.00450  690.00  0.0150   1.250 0.000 0.000  1.0    9.3     NO
  85   86   0   0 16   MANHOLE        0.00000    0.00  0.0000   0.000 0.000 0.000  1.0    0.0
  86   87   0   0  1   CIRCULAR SHAPED 0.00550  435.00  0.0150   1.250 0.000 0.000  1.0   10.0     NO
  87   88   0   0 16   MANHOLE        0.00000    0.00  0.0000   0.000 0.000 0.000  1.0    0.0
  88   89   0   0  1   CIRCULAR SHAPED 0.00420  335.00  0.0150   1.250 0.000 0.000  1.0    9.5     NO
  89   90  92   0 16   MANHOLE        0.00000    0.00  0.0000   0.000 0.000 0.000  1.0    0.0
  90   91   0   0  1   CIRCULAR SHAPED 0.01000  180.00  0.0150   0.667 0.000 0.000  1.0    8.2     NO
+                                                                                   0.40
  91    0   0   0 16   MANHOLE        0.00000    0.00  0.0000   0.000 0.000 0.000  1.0    0.0
  92   93   0   0  1   CIRCULAR SHAPED 0.00530  305.00  0.0150   1.250 0.000 0.000  1.0    9.3     NO
  93   94   0   0 16   MANHOLE        0.00000    0.00  0.0000   0.000 0.000 0.000  1.0    0.0
  94   95   0   0  1   CIRCULAR SHAPED 0.00490  300.00  0.0150   1.000 0.000 0.000  1.0   10.9     NO
  95   96   0   0 16   MANHOLE        0.00000    0.00  0.0000   0.000 0.000 0.000  1.0    0.0
  96   97   0   0  1   CIRCULAR SHAPED 0.00550  435.00  0.0150   1.000 0.000 0.000  1.0   14.1     NO
1METCALF & EDDY, INC.          S T O R M W A T E R   M A N A G E M E N T  M O D E L                PAGE   5
0                                RUN NO.  0          1 MAIN SYSTEM M1 1 YR. DESIGN STORM
OE L E M E N T  D A T A
 -----------------------
OEXT.   UPSTREAM   TYPE DESCRIPTION    SLOPE DISTANCE  MANNING   GEOM1 GEOM2 GEOM3 NUMBER
SURCHRG   SUPER  INVERT
```

```
 ELE.    ELEMENTS                    (FT/FT)   (FT)    ROUGHNESS   (FT)   (FT)   (FT)  BARRELS   (FT)  CRITICAL  DIFF(FT)
  97    98    0    0  16   MANHOLE         0.00000     0.00   0.0000    0.000  0.000  0.000   1.0     0.0
  98    99    0    0   1   CIRCULAR SHAPED  0.00480   520.00   0.0150    1.000  0.000  0.000   1.0    11.4      NO
  99   100    0    0  16   MANHOLE         0.00000     0.00   0.0000    0.000  0.000  0.000   1.0     0.0
 100   101    0    0   1   CIRCULAR SHAPED  0.00480   265.00   0.0150    1.000  0.000  0.000   1.0     8.6      NO
 101   102    0    0  16   MANHOLE         0.00000     0.00   0.0000    0.000  0.000  0.000   1.0     0.0
 102   103    0    0   1   CIRCULAR SHAPED  0.00480   245.00   0.0150    1.000  0.000  0.000   1.0     6.1      NO
 103     0    0    0  16   MANHOLE         0.00000     0.00   0.0000    0.000  0.000  0.000   1.0     0.0
1METCALF & EDDY, INC.          S T O R M W A T E R   M A N A G E M E N T  M O D E L                  PAGE    6
0                                   RUN NO.  0            1 MAIN SYSTEM  M1 1 YR. DESIGN STORM
0I N F I L T R A T I O N  D A T A
 ----------------------------------
0                TOTAL AREA INFILTRATION(IN GPM) DUE TO --

        BASE FLOW     GROUND WATER          MELT          RAIN


           0.0000       708.3000            0.0000


           0.0000
0                APPORTIONED INFILTRATION

        ELEMENT NO.     QINFIL(CFS)             OPNFIL


           23              0.018           0.0115
           21              0.022           0.0140
           26              0.051           0.0322
           30              0.019           0.0122
           28              0.030           0.0188
           24              0.029           0.0183
           19              0.043           0.0271
           17              0.089           0.0565
          171               0.001           0.0008
           36              0.038           0.0238
           34              0.036           0.0230
           38              0.014           0.0087
          140               0.066           0.0419
           32              0.034           0.0215
           15              0.030           0.0187
           49              0.013           0.0082
           47              0.016           0.0103
           45              0.032           0.0205
           43              0.017           0.0109
           59              0.013           0.0080
1METCALF & EDDY, INC.          S T O R M W A T E R   M A N A G E M E N T  M O D E L                  PAGE    7
0                                   RUN NO.  0            1 MAIN SYSTEM  M1 1 YR. DESIGN STORM
0I N F I L T R A T I O N  D A T A
 ----------------------------------
0                TOTAL AREA INFILTRATION(IN GPM) DUE TO --
```

BASE FLOW GROUND WATER MELT RAIN

0.0000 708.3000 0.0000

0.0000
0 APPORTIONED INFILTRATION

ELEMENT NO. QINFIL(CFS) OPNFIL

57	0.018	0.0113
55	0.026	0.0168
53	0.026	0.0162
70	0.006	0.0035
80	0.019	0.0120
78	0.014	0.0087
76	0.014	0.0087
74	0.013	0.0084
72	0.014	0.0087
68	0.014	0.0087
90	0.010	0.0063
102	0.020	0.0128
100	0.022	0.0139
98	0.043	0.0272
96	0.036	0.0228
94	0.025	0.0157
92	0.031	0.0200
88	0.035	0.0219
86	0.045	0.0285
84	0.071	0.0452

0I N F I L T R A T I O N D A T A
---
0 TOTAL AREA INFILTRATION(IN GPM) DUE TO --

BASE FLOW GROUND WATER MELT RAIN

0.0000 708.3000 0.0000

0.0000
0 APPORTIONED INFILTRATION

ELEMENT NO. QINFIL(CFS) OPNFIL

82	0.025	0.0157
66	0.007	0.0047

183	0.001	0.0005
61	0.024	0.0152
51	0.005	0.0034
41	0.008	0.0052
13	0.036	0.0229
11	0.030	0.0192
9	0.103	0.0650
7	0.038	0.0244
181	0.001	0.0007
64	0.051	0.0321
62	0.052	0.0327
5	0.052	0.0332
3	0.033	0.0207

0 RUN NO. 0 1 MAIN SYSTEM M1 1 YR. DESIGN STORM

0C O N D U I T D A T A + D R Y W E A T H E R F L O W

---

0 ELEMENT NUMBER	MAX TYPE	****** FULL FLOW ****** FLOW CFS	FLOW CFS	AREA SQ FT	VELOCITY FT/SEC	********** DRY WEATHER FLOW ********** FLOW CFS	DEPTH FT	VELOCITY FT/SEC	BOD LB/CF	S.S. LB/CF	COLIFORM MPN/CF
23	1	0.93	0.86	0.35	2.463	0.018	0.07	0.999			
21	1	0.90	0.83	0.35	2.389	0.040	0.10	1.234			
26	1	7.57	7.01	1.77	3.968	0.051	0.09	1.182			
30	1	0.42	0.39	0.35	1.126	0.019	0.10	0.584			
28	1	1.25	1.16	0.79	1.475	0.049	0.14	0.733			
24	1	3.98	3.68	1.23	3.000	0.129	0.16	1.409			
19	1	5.92	5.48	1.77	3.099	0.212	0.20	1.496			
17	1	5.22	4.83	1.77	2.733	0.301	0.25	1.524			
171	1	6.46	5.99	1.77	3.387	0.001	0.00	0.896			
36	1	2.39	2.21	0.79	2.815	0.038	0.09	1.069			
34	1	1.42	1.31	0.79	1.672	0.074	0.16	0.904			
38	1	1.84	1.70	0.54	3.122	0.014	0.05	0.964			
140	1	25.83	23.92	3.14	7.613	0.066	0.05	2.014			
32	1	30.32	28.08	3.14	8.938	0.188	0.11	2.588			
15	3	23.47	22.04	5.13	4.297	0.518	0.33	1.813			
49	1	0.96	0.89	0.35	2.536	0.013	0.06	0.915			
47	1	0.94	0.87	0.35	2.482	0.029	0.08	1.154			
45	1	1.30	1.20	0.54	2.207	0.062	0.13	1.159			
43	1	0.41	0.38	0.54	0.698	0.079	0.26	0.550			
59	1	0.79	0.73	0.35	2.085	0.013	0.06	0.798			
57	1	1.44	1.33	0.54	2.443	0.031	0.09	1.014			
55	1	2.09	1.93	0.79	2.462	0.057	0.12	1.100			
53	1	2.11	1.96	0.79	2.493	0.083	0.14	1.238			
70	1	0.90	0.83	0.35	2.389	0.006	0.04	0.688			
80	1	0.82	0.76	0.35	2.170	0.019	0.07	0.921			
78	1	0.82	0.76	0.35	2.170	0.033	0.09	1.086			
76	1	0.82	0.76	0.35	2.170	0.047	0.11	1.204			
74	1	1.00	0.93	0.35	2.658	0.060	0.11	1.495			
72	1	0.44	0.41	0.35	1.166	0.074	0.19	0.884			
68	1	0.89	0.82	0.35	2.350	0.093	0.15	1.559			
90	1	1.14	1.05	0.35	3.009	0.010	0.04	0.973			
102	1	2.32	2.15	0.79	2.731	0.020	0.07	0.883			

100	1	2.32	2.15	0.79	2.731	0.042	0.10	1.085
98	1	2.32	2.15	0.79	2.731	0.085	0.14	1.329
96	1	2.48	2.30	0.79	2.923	0.121	0.16	1.548
94	1	2.34	2.17	0.79	2.759	0.146	0.18	1.572
92	1	4.41	4.09	1.23	3.330	0.177	0.18	1.668
88	1	3.93	3.64	1.23	2.965	0.222	0.21	1.642
86	1	4.50	4.16	1.23	3.392	0.267	0.21	1.906
84	1	4.07	3.77	1.23	3.069	0.338	0.25	1.902
82	1	4.62	4.28	1.23	3.484	0.363	0.25	2.123
66	1	1.92	1.78	0.79	2.265	0.463	0.35	1.904
183	1	1.95	1.81	0.79	2.299	0.464	0.35	1.926
61	1	1.95	1.81	0.79	2.299	0.488	0.36	1.953
51	1	1.83	1.70	0.79	2.159	0.576	0.40	1.952
41	1	3.32	3.07	1.23	2.505	0.663	0.39	1.998
13	3	30.14	28.30	6.25	4.526	1.217	0.51	2.327
11	3	27.91	26.20	6.25	4.190	1.248	0.54	2.237
9	3	19.06	17.90	6.25	2.862	1.350	0.66	1.793
7	3	43.53	40.87	6.25	6.536	1.389	0.45	3.118

0C O N D U I T D A T A + D R Y W E A T H E R F L O W

0		MAX	****** FULL FLOW ******				********** DRY WEATHER FLOW **********				
ELEMENT NUMBER	TYPE	FLOW CFS	FLOW CFS	AREA SQ FT	VELOCITY FT/SEC	FLOW CFS	DEPTH FT	VELOCITY FT/SEC	BOD LB/CF	S.S. LB/CF	COLIFORM MPN/CF
181	1	3.59	3.32	1.23	2.706	0.001	0.00	0.716			
64	1	3.59	3.32	1.23	2.706	0.052	0.11	0.998			
62	1	4.54	4.20	1.23	3.423	0.103	0.13	1.446			
5	3	30.57	28.70	6.25	4.590	1.544	0.57	2.555			
3	3	31.41	29.49	6.25	4.716	1.577	0.57	2.620			

0S U R C H A R G E D A T A

TIME SECONDS	TIMESTEP	SURCHARGED ELEMENT	SURCHARGE CU FT	STORAGE CAPACITY CFS.	SURCHARGED ELEMENT	SURCHARGED SLOPE	CONDUIT-- UPSTREAM	DOWNSTREAM	MAXIMUM	SURCHARGES--IN--FEET DISCHARGE CFS	DROP FT.
13200.	22	72	0.00	73	0.43	0.00168	0.05	0.00	6.70	0.40	0.00
13200.	22	66	0.00	67	1.86	0.00360	0.03	0.00	8.00	1.84	0.00
13800.	23	72	0.00	73	0.48	0.00204	0.14	0.00	6.70	0.48	0.00
13800.	23	66	0.00	67	2.06	0.00441	0.10	0.00	8.00	2.06	0.00
14400.	24	72	0.00	73	0.46	0.00190	0.10	0.00	6.70	0.46	0.00
14400.	24	66	0.00	67	2.10	0.00461	0.12	0.00	8.00	2.10	0.00
15000.	25	72	0.00	73	0.45	0.00186	0.11	0.02	6.70	0.45	0.00
15000.	25	66	0.00	67	2.07	0.00445	0.10	0.00	8.00	2.07	0.00
15600.	26	72	0.00	73	0.48	0.00205	0.14	0.00	6.70	0.48	0.00
15600.	26	66	0.00	67	2.10	0.00460	0.12	0.00	8.00	2.10	0.00
16200.	27	72	0.00	73	0.46	0.00188	0.10	0.00	6.70	0.46	0.00
16200.	27	66	0.00	67	2.09	0.00454	0.11	0.00	8.00	2.09	0.00

16800.	28	43	0.00	44	0.41	0.00047	0.02	0.00	9.30	0.34	0.00
16800.	28	72	0.00	73	0.64	0.00370	0.57	0.02	6.70	0.64	0.00
16800.	28	68	0.00	69	0.94	0.00797	0.91	0.44	6.70	0.91	0.00
16800.	28	66	0.00	67	2.65	0.00732	0.36	0.00	8.00	2.65	0.00
16800.	28	51	0.00	52	1.77	0.00328	0.02	0.00	10.10	1.76	0.00
17400.	29	43	0.00	44	0.41	0.00047	0.02	0.00	9.30	0.41	0.00
17400.	29	70	0.00	71	0.29	0.00074	0.15	0.71	5.60	0.28	0.20
17400.	29	72	0.00	73	0.72	0.00469	1.71	0.91	6.70	0.72	0.00
17400.	29	68	0.00	69	1.01	0.00926	1.48	0.70	6.70	1.01	0.00
17400.	29	66	0.00	67	3.02	0.00954	0.56	0.00	8.00	3.02	0.00
17400.	29	51	0.00	52	1.94	0.00392	0.06	0.00	10.10	1.94	0.00
18000.	30	43	0.00	44	0.39	0.00043	0.01	0.00	9.30	0.39	0.00
18000.	30	70	0.00	71	0.29	0.00075	0.73	1.28	5.60	0.29	0.20
18000.	30	74	0.00	75	0.41	0.00151	0.20	1.71	7.30	0.34	0.00
18000.	30	72	0.00	73	0.61	0.00339	1.96	1.48	6.70	0.61	0.00
18000.	30	68	0.00	69	0.91	0.00755	1.26	0.89	6.70	0.91	0.00
18000.	30	66	0.00	67	3.00	0.00941	0.55	0.00	8.00	3.00	0.00
18000.	30	51	0.00	52	1.89	0.00372	0.05	0.00	10.10	1.89	0.00
18600.	31	43	0.00	44	0.42	0.00050	0.02	0.00	9.30	0.42	0.00
18600.	31	70	0.00	71	0.29	0.00075	0.50	1.06	5.60	0.29	0.20
18600.	31	74	0.00	75	0.43	0.00169	0.49	1.96	7.30	0.43	0.00
18600.	31	72	0.00	73	0.71	0.00450	2.01	1.26	6.70	0.71	0.00
18600.	31	68	0.00	69	1.01	0.00917	1.65	0.88	6.70	1.01	0.00
18600.	31	66	0.00	67	3.04	0.00965	0.57	0.00	8.00	3.04	0.00
18600.	31	51	0.00	52	1.92	0.00383	0.05	0.00	10.10	1.92	0.00
19200.	32	43	0.00	44	0.41	0.00046	0.02	0.00	9.30	0.41	0.00
19200.	32	70	0.00	71	0.29	0.00075	0.90	1.45	5.60	0.29	0.20
19200.	32	74	0.00	75	0.44	0.00172	0.55	2.01	7.30	0.44	0.00
19200.	32	72	0.00	73	0.71	0.00455	2.41	1.65	6.70	0.71	0.00
19200.	32	68	0.00	69	1.01	0.00924	1.69	0.90	6.70	1.01	0.00
19200.	32	66	0.00	67	3.05	0.00971	0.58	0.00	8.00	3.05	0.00
19200.	32	51	0.00	52	1.93	0.00387	0.06	0.00	10.10	1.93	0.00
19800.	33	43	0.00	44	0.42	0.00048	0.02	0.00	9.30	0.42	0.00
19800.	33	70	0.00	71	0.29	0.00075	0.93	1.49	5.60	0.29	0.20
19800.	33	74	0.00	75	0.41	0.00156	0.91	2.41	7.30	0.41	0.00
19800.	33	72	0.00	73	0.69	0.00429	2.39	1.69	6.70	0.69	0.00
19800.	33	68	0.00	69	0.99	0.00886	1.60	0.91	6.70	0.99	0.00
19800.	33	66	0.00	67	3.08	0.00989	0.59	0.00	8.00	3.08	0.00

0S U R C H A R G E D A T A

TIME SECONDS	TIMESTEP	SURCHARGED ELEMENT	SURCHARGE CU FT CFS.	ELEMENT	STORAGE CAPACITY	SURCHARGED SLOPE	SURCHARGED UPSTREAM	SURCHARGED DOWNSTREAM	CONDUIT-- MAXIMUM CFS	SURCHARGES--IN--FEET DISCHARGE DROP FT.
19800.	33	51	0.00	52	1.90	0.00376	0.05	0.00	10.10	1.90	0.00
20400.	34	28	0.00	29	1.24	0.00161	0.08	0.00	6.40	1.02	0.30
20400.	34	17	0.00	18	5.10	0.00312	0.23	0.00	7.60	4.72	0.00
20400.	34	43	0.00	44	0.97	0.00259	0.55	0.00	9.30	0.97	0.00

20400.	34	70	0.00	71	0.81	0.00596	1.37	1.40	5.60	0.81	0.20
20400.	34	78	0.00	79	1.07	0.01032	1.28	0.00	6.90	1.03	0.00
20400.	34	76	0.00	77	1.04	0.00976	2.06	0.91	7.00	1.00	0.00
20400.	34	74	0.00	75	1.01	0.00923	2.73	2.39	7.30	1.01	0.00
20400.	34	72	89.51	73	1.56	0.02190	6.70	1.60	6.70	1.56	0.00
20400.	34	68	351.12	69	1.80	0.02919	6.70	0.93	6.70	1.80	0.00
20400.	34	66	0.00	67	5.28	0.02904	2.32	0.00	8.00	5.28	0.00
20400.	34	183	0.00	65	1.81	0.00307	0.00	0.00	11.10	1.40	0.00
20400.	34	181	0.00	65	4.43	0.00623	0.03	0.00	7.50	4.42	0.00
20400.	34	51	0.00	52	2.61	0.00713	0.27	0.00	10.10	2.61	0.00
20400.	34	41	0.00	42	3.59	0.00409	0.09	0.00	9.50	3.54	0.00
20400.	34	9	0.00	10	24.35	0.00259	0.52	0.00	9.40	23.63	0.00
20400.	34	64	0.00	180	4.47	0.00634	1.39	0.00	7.50	4.06	0.00
20400.	34	62	0.00	63	5.14	0.00840	1.40	0.00	5.70	4.68	0.00
20400.	34	5	0.00	6	29.15	0.00371	0.03	0.00	11.50	28.31	0.00
21000.	35	15	0.00	16	22.26	0.00367	0.01	0.00	10.80	22.29	0.00
21000.	35	43	0.00	44	0.77	0.00164	0.81	0.50	9.30	0.77	0.00
21000.	35	70	0.00	71	0.63	0.00363	5.33	5.60	5.60	0.63	0.20
21000.	35	78	0.00	79	0.83	0.00629	2.33	2.06	6.90	0.83	0.00
21000.	35	76	0.00	77	0.85	0.00650	3.05	2.73	7.00	0.85	0.00
21000.	35	74	0.00	75	0.86	0.00670	6.44	6.70	7.30	0.86	0.00
21000.	35	72	733.59	73	0.41	0.00150	6.70	6.70	6.70	0.41	0.00
21000.	35	68	41.82	69	1.57	0.02230	6.70	2.65	6.70	1.57	0.00
21000.	35	82	0.00	83	4.02	0.00513	1.91	2.07	8.30	3.95	0.00
21000.	35	66	0.00	67	5.68	0.03367	3.01	0.28	8.00	5.68	0.00
21000.	35	183	0.00	65	1.81	0.00315	0.00	0.00	11.10	1.71	0.00
21000.	35	181	0.00	65	4.63	0.00680	1.43	1.39	7.50	4.63	0.00
21000.	35	61	0.00	182	1.76	0.00324	0.22	0.27	11.10	1.73	0.00
21000.	35	51	0.00	52	2.79	0.00813	0.67	0.34	10.10	2.79	0.00
21000.	35	41	0.00	42	3.57	0.00405	0.08	0.00	9.50	3.57	0.00
21000.	35	11	0.00	198	26.31	0.00303	0.53	0.52	9.30	26.24	0.00
21000.	35	9	0.00	10	26.80	0.00314	0.77	0.00	9.40	26.80	0.00
21000.	35	64	0.00	180	4.68	0.00694	3.09	1.40	7.50	4.68	0.00
21000.	35	62	0.00	63	5.35	0.00907	4.01	2.28	5.70	5.35	0.00
21000.	35	5	0.00	6	33.19	0.00481	0.27	0.00	11.50	33.19	0.00
21000.	35	3	0.00	4	33.54	0.00492	0.16	0.00	12.40	33.57	0.00
21600.	36	17	0.00	18	4.88	0.00285	1.72	1.68	7.60	4.85	0.00
21600.	36	43	0.00	44	0.91	0.00227	0.97	0.50	9.30	0.91	0.00
21600.	36	70	0.00	71	0.69	0.00429	5.40	5.60	5.60	0.69	0.20
21600.	36	80	0.00	81	0.37	0.00123	0.96	2.33	6.50	0.32	0.00
21600.	36	78	0.00	79	0.91	0.00750	3.63	3.05	6.90	0.91	0.00
21600.	36	76	9.71	77	0.91	0.00746	7.00	6.44	7.00	0.91	0.00
21600.	36	74	0.00	75	0.92	0.00767	6.67	6.70	7.30	0.92	0.00
21600.	36	72	1422.04	73	0.41	0.00150	6.70	6.70	6.70	0.41	0.00
21600.	36	68	0.00	69	1.18	0.01258	4.96	3.34	6.70	1.18	0.00
21600.	36	84	0.00	85	3.16	0.00317	0.98	1.91	9.30	2.88	0.00

0S U R C H A R G E D A T A

TIME SECONDS	TIMESTEP	SURCHARGED ELEMENT	SURCHARGE CU FT CFS.	STORAGE ELEMENT	SURCHARGED CAPACITY	SURCHARGED SLOPE	CONDUIT-- UPSTREAM	DOWNSTREAM	MAXIMUM	SURCHARGES--IN--FEET DISCHARGE DROP CFS	FT.
21600.	36	82	0.00	83	3.56	0.00402	2.33	2.76	8.30	3.56	0.00
21600.	36	66	0.00	67	4.96	0.02570	3.69	1.68	8.00	4.96	0.00
21600.	36	183	0.00	65	2.26	0.00532	0.24	0.22	11.10	2.26	0.00
21600.	36	181	0.00	65	3.44	0.00377	3.09	3.09	7.50	3.44	0.00
21600.	36	61	0.00	182	2.28	0.00542	1.26	0.67	11.10	2.28	0.00
21600.	36	51	0.00	52	3.26	0.01107	0.86	0.33	10.10	3.26	0.00
21600.	36	41	0.00	42	4.17	0.00552	0.20	0.00	9.50	4.17	0.00
21600.	36	13	0.00	14	25.92	0.00293	0.44	0.53	9.50	25.64	0.00
21600.	36	11	0.00	198	25.67	0.00288	0.75	0.77	9.30	25.67	0.00
21600.	36	9	0.00	10	26.24	0.00301	0.71	0.00	9.40	26.24	0.00
21600.	36	64	0.00	180	3.50	0.00388	4.20	4.01	7.50	3.50	0.00
21600.	36	62	0.00	63	4.38	0.00610	2.77	2.52	5.70	4.38	0.00
21600.	36	5	0.00	6	31.29	0.00428	0.31	0.16	11.50	31.29	0.00
21600.	36	3	0.00	4	31.77	0.00441	0.09	0.00	12.40	31.77	0.00
22200.	37	19	0.00	20	3.92	0.00184	1.11	1.72	7.70	3.71	0.00
22200.	37	15	0.00	16	22.48	0.00374	0.79	0.77	10.80	22.36	0.00
22200.	37	43	0.00	44	0.87	0.00210	1.04	0.62	9.30	0.87	0.00
22200.	37	53	0.00	54	1.10	0.00125	0.01	0.86	7.30	1.00	0.00
22200.	37	70	0.00	71	0.67	0.00407	4.54	4.76	5.60	0.67	0.20
22200.	37	80	0.00	81	0.33	0.00099	2.17	3.63	6.50	0.33	0.00
22200.	37	78	82.70	79	0.76	0.00520	6.90	6.90	6.90	0.76	0.00
22200.	37	76	0.00	77	0.79	0.00562	6.77	6.67	7.00	0.79	0.00
22200.	37	74	0.00	75	0.80	0.00581	6.22	6.70	7.30	0.80	0.00
22200.	37	72	1701.65	73	0.97	0.00845	6.70	4.96	6.70	0.97	0.00
22200.	37	68	173.10	69	1.36	0.01680	6.70	4.02	6.70	1.36	0.00
22200.	37	84	0.00	85	3.69	0.00433	2.22	2.33	9.30	3.69	0.00
22200.	37	82	0.00	83	4.27	0.00580	3.44	3.44	8.30	4.27	0.00
22200.	37	66	0.00	67	5.82	0.03536	6.23	3.34	8.00	5.82	0.00
22200.	37	183	0.00	65	2.10	0.00462	1.27	1.26	11.10	2.10	0.00
22200.	37	181	0.00	65	4.44	0.00625	4.22	4.20	7.50	4.44	0.00
22200.	37	61	0.00	182	2.13	0.00473	1.24	0.86	11.10	2.13	0.00
22200.	37	51	0.00	52	3.13	0.01024	0.92	0.45	10.10	3.13	0.00
22200.	37	41	0.00	42	4.01	0.00511	2.86	2.69	9.50	4.01	0.00
22200.	37	13	0.00	14	26.68	0.00311	0.69	0.75	9.50	26.68	0.00
22200.	37	11	0.00	198	26.71	0.00312	0.72	0.71	9.30	26.71	0.00
22200.	37	9	0.00	10	27.29	0.00325	0.82	0.00	9.40	27.29	0.00
22200.	37	64	0.00	180	4.49	0.00640	4.19	2.77	7.50	4.49	0.00
22200.	37	62	0.00	63	5.25	0.00875	4.14	2.56	5.70	5.25	0.00
22200.	37	5	0.00	6	33.68	0.00496	0.39	0.09	11.50	33.68	0.00
22200.	37	3	0.00	4	34.09	0.00508	0.18	0.00	12.40	34.09	0.00
22800.	38	21	0.00	22	0.55	0.00276	0.53	1.95	8.40	0.53	0.00
22800.	38	24	0.00	25	1.83	0.00106	0.46	1.36	7.50	1.79	0.00
22800.	38	171	0.00	25	6.00	0.00432	0.00	0.00	7.00	5.99	0.00
22800.	38	17	0.00	18	3.84	0.00177	1.72	2.46	7.60	3.62	0.00
22800.	38	15	0.00	16	20.35	0.00307	0.94	1.02	10.80	20.35	0.00
22800.	38	43	0.00	44	0.85	0.00198	3.67	3.27	9.30	0.85	0.00
22800.	38	53	0.00	54	1.06	0.00117	0.04	0.92	7.30	1.06	0.00

22800.	38	70	0.00	71	0.68	0.00414	5.38	5.60	5.60	0.68	0.20
22800.	38	80	0.00	81	0.35	0.00110	5.09	6.50	6.50	0.35	0.00
22800.	38	78	160.27	79	0.79	0.00570	6.90	6.77	6.90	0.79	0.00

0S U R C H A R G E D A T A

TIME SECONDS	TIMESTEP	SURCHARGED ELEMENT	SURCHARGE CU FT	STORAGE ELEMENT	SURCHARGED CAPACITY CFS.	SURCHARGED SLOPE	CONDUIT-- UPSTREAM	DOWNSTREAM	MAXIMUM	SURCHARGES--IN--FEET DISCHARGE CFS	DROP FT.
22800.	38	76	0.00	77	0.81	0.00590	6.40	6.22	7.00	0.81	0.00
22800.	38	74	0.00	75	0.82	0.00610	6.29	6.70	7.30	0.82	0.00
22800.	38	72	2328.78	73	0.41	0.00150	6.70	6.70	6.70	0.41	0.00
22800.	38	68	316.52	69	0.86	0.00667	6.70	6.56	6.70	0.86	0.00
22800.	38	86	0.00	87	2.90	0.00266	0.98	2.22	10.00	2.75	0.00
22800.	38	84	0.00	85	3.41	0.00369	2.88	3.44	9.30	3.41	0.00
22800.	38	82	0.00	83	4.04	0.00518	5.83	5.98	8.30	4.04	0.00
22800.	38	66	0.00	67	5.11	0.02721	6.63	4.47	8.00	5.11	0.00
22800.	38	183	0.00	65	1.83	0.00351	1.24	1.24	11.10	1.83	0.00
22800.	38	181	0.00	65	4.00	0.00508	4.21	4.19	7.50	4.00	0.00
22800.	38	61	0.00	182	1.86	0.00360	0.98	0.92	11.10	1.86	0.00
22800.	38	51	0.00	52	2.92	0.00891	3.49	3.11	10.10	2.92	0.00
22800.	38	41	0.00	42	3.78	0.00453	3.06	2.94	9.50	3.78	0.00
22800.	38	13	0.00	14	24.48	0.00262	0.59	0.72	9.50	24.48	0.00
22800.	38	11	0.00	198	24.51	0.00262	0.77	0.82	9.30	24.51	0.00
22800.	38	9	0.00	10	25.08	0.00275	0.59	0.00	9.40	25.08	0.00
22800.	38	64	0.00	180	4.05	0.00521	4.97	4.14	7.50	4.05	0.00
22800.	38	62	0.00	63	4.88	0.00757	3.62	2.64	5.70	4.88	0.00
22800.	38	5	0.00	6	30.73	0.00413	0.30	0.18	11.50	30.73	0.00
22800.	38	3	0.00	4	31.18	0.00425	0.06	0.00	12.40	31.18	0.00
23400.	39	28	0.00	29	1.08	0.00122	0.34	0.41	6.40	1.02	0.30
23400.	39	19	0.00	20	4.00	0.00192	1.14	1.72	7.70	3.90	0.00
23400.	39	17	0.00	18	4.85	0.00282	2.63	2.61	7.60	4.85	0.00
23400.	39	15	0.00	16	22.40	0.00372	0.93	0.92	10.80	22.40	0.00
23400.	39	45	0.00	46	0.59	0.00096	2.24	3.67	7.30	0.56	0.00
23400.	39	43	0.00	44	0.83	0.00192	3.86	3.48	9.30	0.83	0.00
23400.	39	53	0.00	54	1.08	0.00121	2.63	3.49	7.30	1.08	0.00
23400.	39	70	0.00	71	0.67	0.00412	5.38	5.60	5.60	0.67	0.20
23400.	39	80	0.00	81	0.34	0.00105	5.07	6.50	6.50	0.34	0.00
23400.	39	78	171.17	79	0.89	0.00721	6.90	6.40	6.90	0.89	0.00
23400.	39	76	0.00	77	0.91	0.00743	6.85	6.29	7.00	0.91	0.00
23400.	39	74	0.00	75	0.92	0.00765	6.66	6.70	7.30	0.92	0.00
23400.	39	72	3015.22	73	0.41	0.00150	6.70	6.70	6.70	0.41	0.00
23400.	39	68	481.31	69	0.82	0.00610	6.70	6.70	6.70	0.82	0.00
23400.	39	88	0.00	89	2.44	0.00189	0.21	0.98	9.50	2.31	0.00
23400.	39	86	0.00	87	2.79	0.00247	1.56	2.88	10.00	2.79	0.00
23400.	39	84	0.00	85	3.45	0.00377	5.33	5.83	9.30	3.45	0.00
23400.	39	82	0.00	83	4.05	0.00521	6.23	6.38	8.30	4.05	0.00
23400.	39	66	0.00	67	5.07	0.02679	6.57	4.46	8.00	5.07	0.00

23400.	39	183	0.00	65	1.95	0.00398	0.99	0.98	11.10	1.95	0.00
23400.	39	181	0.00	65	3.84	0.00468	4.98	4.97	7.50	3.84	0.00
23400.	39	61	0.00	182	1.98	0.00408	3.69	3.49	11.10	1.98	0.00
23400.	39	51	0.00	52	3.06	0.00978	3.75	3.31	10.10	3.06	0.00
23400.	39	41	0.00	42	3.90	0.00484	2.98	2.84	9.50	3.90	0.00
23400.	39	13	0.00	14	26.63	0.00310	0.70	0.77	9.50	26.63	0.00
23400.	39	11	0.00	198	26.66	0.00311	0.61	0.59	9.30	26.66	0.00
23400.	39	9	0.00	10	27.24	0.00324	0.81	0.00	9.40	27.24	0.00
23400.	39	64	0.00	180	3.89	0.00480	4.26	3.62	7.50	3.89	0.00
23400.	39	62	0.00	63	4.68	0.00696	3.23	2.55	5.70	4.68	0.00
23400.	39	5	0.00	6	33.01	0.00476	0.32	0.06	11.50	33.01	0.00

0S U R C H A R G E D A T A

TIME TIMESTEP SURCHARGED SURCHARGE STORAGE SURCHARGED SURCHARGED CONDUIT--
SURCHARGES--IN--FEET DISCHARGE DROP
SECONDS ELEMENT CU FT ELEMENT CAPACITY SLOPE UPSTREAM DOWNSTREAM MAXIMUM
CFS FT.
CFS.

23400.	39	3	0.00	4	33.44	0.00488	0.15	0.00	12.40	33.44	0.00
24000.	40	24	0.00	25	1.62	0.00083	0.41	1.39	7.50	1.56	0.00
24000.	40	19	0.00	20	1.97	0.00047	1.55	2.63	7.70	1.97	0.00
24000.	40	17	0.00	18	2.28	0.00062	1.04	2.60	7.60	2.28	0.00
24000.	40	15	0.00	16	14.27	0.00151	0.74	1.03	10.80	14.27	0.00
24000.	40	45	0.00	46	0.19	0.00010	2.03	3.86	7.30	0.19	0.00
24000.	40	43	0.00	44	0.28	0.00021	3.35	3.40	9.30	0.28	0.00
24000.	40	55	0.00	56	0.30	0.00010	1.41	2.63	7.00	0.14	0.00
24000.	40	53	0.00	54	0.25	0.00007	2.53	3.75	7.30	0.25	0.00
24000.	40	70	0.00	71	0.23	0.00047	5.02	5.60	5.60	0.23	0.20
24000.	40	80	0.00	81	0.10	0.00010	4.74	6.50	6.50	0.10	0.00
24000.	40	78	0.00	79	0.57	0.00299	6.30	6.85	6.90	0.57	0.00
24000.	40	76	0.00	77	0.59	0.00313	6.15	6.66	7.00	0.59	0.00
24000.	40	74	0.00	75	0.60	0.00328	5.61	6.70	7.30	0.60	0.00
24000.	40	72	3286.25	73	0.41	0.00150	6.70	6.70	6.70	0.41	0.00
24000.	40	68	378.52	69	0.82	0.00610	6.70	6.70	6.70	0.82	0.00
24000.	40	88	0.00	89	0.98	0.00031	0.26	1.56	9.50	0.98	0.00
24000.	40	86	0.00	87	1.19	0.00045	3.13	5.33	10.00	1.19	0.00
24000.	40	84	0.00	85	1.46	0.00068	3.60	6.23	9.30	1.46	0.00
24000.	40	82	0.00	83	1.63	0.00084	5.13	6.32	8.30	1.63	0.00
24000.	40	66	0.00	67	2.50	0.00653	5.52	5.23	8.00	2.50	0.00
24000.	40	183	0.00	65	0.48	0.00024	3.66	3.69	11.10	0.48	0.00
24000.	40	181	0.00	65	2.27	0.00163	4.24	4.26	7.50	2.27	0.00
24000.	40	61	0.00	182	0.51	0.00027	2.84	3.75	11.10	0.51	0.00
24000.	40	51	0.00	52	0.76	0.00061	3.08	3.23	10.10	0.76	0.00
24000.	40	41	0.00	42	1.05	0.00035	2.74	2.95	9.50	1.05	0.00
24000.	40	13	0.00	14	15.43	0.00104	0.23	0.61	9.50	15.43	0.00
24000.	40	11	0.00	198	15.46	0.00104	0.56	0.81	9.30	15.46	0.00
24000.	40	64	0.00	180	2.32	0.00170	2.34	3.23	7.50	2.32	0.00
24000.	40	62	0.00	63	2.56	0.00207	0.81	2.57	5.70	2.56	0.00
24600.	41	21	0.00	22	0.28	0.00073	0.15	2.38	8.40	0.24	0.00

24600.	41	24	0.00	25	1.56	0.00077	0.81	1.80	7.50	1.56	0.00
24600.	41	17	0.00	18	2.63	0.00083	0.99	2.41	7.60	2.63	0.00
24600.	41	15	0.00	16	14.37	0.00153	0.27	0.56	10.80	14.37	0.00
24600.	41	45	0.00	46	0.33	0.00030	1.62	3.35	7.30	0.33	0.00
24600.	41	43	0.00	44	0.47	0.00062	3.22	3.16	9.30	0.47	0.00
24600.	41	57	0.00	58	0.23	0.00014	0.34	1.58	7.40	0.14	0.00
24600.	41	55	0.00	56	0.28	0.00008	1.31	2.53	7.00	0.28	0.00
24600.	41	53	0.00	54	0.44	0.00020	1.90	3.08	7.30	0.44	0.00
24600.	41	70	0.00	71	0.30	0.00079	5.05	5.60	5.60	0.30	0.20
24600.	41	80	0.00	81	0.18	0.00028	4.60	6.30	6.50	0.18	0.00
24600.	41	78	0.00	79	0.44	0.00173	5.28	6.15	6.90	0.44	0.00
24600.	41	76	0.00	77	0.45	0.00184	4.77	5.61	7.00	0.45	0.00
24600.	41	74	0.00	75	0.46	0.00195	5.30	6.70	7.30	0.46	0.00
24600.	41	72	3484.75	73	0.41	0.00150	6.70	6.70	6.70	0.41	0.00
24600.	41	68	194.89	69	1.02	0.00947	6.70	5.86	6.70	1.02	0.00
24600.	41	88	0.00	89	1.47	0.00069	1.95	3.13	9.50	1.47	0.00
24600.	41	86	0.00	87	1.70	0.00092	1.61	3.60	10.00	1.70	0.00
24600.	41	84	0.00	85	2.03	0.00131	2.93	5.13	9.30	2.03	0.00
24600.	41	82	0.00	83	2.35	0.00175	4.30	5.27	8.30	2.35	0.00

0S U R C H A R G E D A T A

TIME SECONDS	TIMESTEP ELEMENT	SURCHARGED CU FT CFS.	SURCHARGE ELEMENT	STORAGE CAPACITY	SURCHARGED SLOPE	SURCHARGED UPSTREAM	CONDUIT-- DOWNSTREAM	SURCHARGES--IN--FEET MAXIMUM CFS	DISCHARGE FT.	DROP
24600.	41	66	0.00	67	3.48	0.01265	5.33	4.49	8.00	3.48	0.00
24600.	41	183	0.00	65	0.80	0.00068	2.82	2.84	11.10	0.80	0.00
24600.	41	181	0.00	65	2.99	0.00284	2.34	2.34	7.50	2.99	0.00
24600.	41	61	0.00	182	0.83	0.00072	2.30	3.08	11.10	0.83	0.00
24600.	41	51	0.00	52	1.27	0.00168	2.91	2.99	10.10	1.27	0.00
24600.	41	41	0.00	42	1.75	0.00097	2.31	2.48	9.50	1.75	0.00
24600.	41	13	0.00	14	16.31	0.00116	0.19	0.56	9.50	16.31	0.00
24600.	41	64	0.00	180	3.04	0.00294	0.53	0.81	7.50	3.04	0.00
25200.	42	19	0.00	20	3.47	0.00144	0.25	0.99	7.70	3.36	0.00
25200.	42	17	0.00	18	3.80	0.00173	1.17	1.94	7.60	3.80	0.00
25200.	42	15	0.00	16	16.37	0.00199	0.30	0.52	10.80	16.37	0.00
25200.	42	45	0.00	46	0.27	0.00020	1.43	3.22	7.30	0.27	0.00
25200.	42	43	0.00	44	0.39	0.00042	2.74	2.73	9.30	0.39	0.00
25200.	42	57	0.00	58	0.23	0.00014	0.24	1.48	7.40	0.23	0.00
25200.	42	55	0.00	56	0.35	0.00012	0.69	1.90	7.00	0.35	0.00
25200.	42	53	0.00	54	0.49	0.00025	1.74	2.91	7.30	0.49	0.00
25200.	42	70	0.00	71	0.29	0.00074	5.04	5.60	5.60	0.29	0.20
25200.	42	80	0.00	81	0.15	0.00020	3.56	5.28	6.50	0.15	0.00
25200.	42	78	0.00	79	0.39	0.00141	3.83	4.77	6.90	0.39	0.00
25200.	42	76	0.00	77	0.41	0.00151	4.37	5.30	7.00	0.41	0.00
25200.	42	74	0.00	75	0.42	0.00161	5.21	6.70	7.30	0.42	0.00
25200.	42	72	3657.77	73	0.41	0.00150	6.70	6.70	6.70	0.41	0.00
25200.	42	68	0.00	69	1.03	0.00963	6.55	5.67	6.70	1.03	0.00

25200.	42	90	0.00	91	0.13	0.00015	0.36	2.14	8.20	0.08	0.40
25200.	42	92	0.00	93	0.92	0.00027	0.42	1.95	9.30	0.60	0.00
25200.	42	88	0.00	89	0.84	0.00022	0.27	1.61	9.50	0.84	0.00
25200.	42	86	0.00	87	1.07	0.00036	0.70	2.93	10.00	1.07	0.00
25200.	42	84	0.00	85	1.39	0.00061	1.62	4.30	9.30	1.39	0.00
25200.	42	82	0.00	83	1.64	0.00086	3.90	5.08	8.30	1.64	0.00
25200.	42	66	0.00	67	2.75	0.00792	3.23	2.82	8.00	2.75	0.00
25200.	42	183	0.00	65	0.66	0.00046	2.27	2.30	11.10	0.66	0.00
25200.	42	181	0.00	65	2.40	0.00182	0.52	0.53	7.50	2.40	0.00
25200.	42	61	0.00	182	0.69	0.00049	2.06	2.91	11.10	0.69	0.00
25200.	42	51	0.00	52	1.18	0.00146	2.46	2.56	10.10	1.18	0.00
25200.	42	41	0.00	42	1.58	0.00079	2.27	2.44	9.50	1.58	0.00
25200.	42	9	0.00	10	18.72	0.00153	0.06	0.00	9.40	18.21	0.00
25800.	43	26	0.00	222	7.02	0.00592	0.01	0.00	10.40	7.18	0.00
25800.	43	19	0.00	20	2.91	0.00102	0.28	1.17	7.70	2.91	0.00
25800.	43	17	0.00	18	3.38	0.00137	0.94	1.97	7.60	3.38	0.00
25800.	43	45	0.00	46	0.30	0.00024	0.97	2.74	7.30	0.30	0.00
25800.	43	43	0.00	44	0.42	0.00050	2.71	2.68	9.30	0.42	0.00
25800.	43	55	0.00	56	0.38	0.00015	0.54	1.74	7.00	0.38	0.00
25800.	43	53	0.00	54	0.53	0.00029	1.31	2.46	7.30	0.53	0.00
25800.	43	70	0.00	71	0.29	0.00075	5.04	5.60	5.60	0.29	0.20
25800.	43	80	0.00	81	0.16	0.00023	2.11	3.83	6.50	0.16	0.00
25800.	43	78	0.00	79	0.41	0.00150	3.45	4.37	6.90	0.41	0.00
25800.	43	76	0.00	77	0.42	0.00160	4.31	5.21	7.00	0.42	0.00
25800.	43	74	0.00	75	0.43	0.00170	5.24	6.70	7.30	0.43	0.00
25800.	43	72	3793.51	73	0.48	0.00210	6.70	6.55	6.70	0.48	0.00
25800.	43	68	0.00	69	0.78	0.00555	3.43	3.56	6.70	0.78	0.00

1METCALF & EDDY, INC. S T O R M W A T E R M A N A G E M E N T M O D E L PAGE 17
0 RUN NO. 0 1 MAIN SYSTEM M1 1 YR. DESIGN STORM
0S U R C H A R G E D A T A

TIME SECONDS	TIMESTEP	SURCHARGED ELEMENT	SURCHARGE CU FT	STORAGE ELEMENT	SURCHARGED CAPACITY CFS.	SURCHARGED SLOPE	CONDUIT-- UPSTREAM	DOWNSTREAM	MAXIMUM	SURCHARGES--IN--FEET DISCHARGE CFS	DROP FT.
25800.	43	84	0.00	85	2.04	0.00132	1.71	3.90	9.30	2.04	0.00
25800.	43	82	0.00	83	2.32	0.00171	2.00	2.98	8.30	2.32	0.00
25800.	43	66	0.00	67	3.20	0.01067	2.93	2.27	8.00	3.20	0.00
25800.	43	183	0.00	65	0.82	0.00070	2.04	2.06	11.10	0.82	0.00
25800.	43	61	0.00	182	0.84	0.00074	1.69	2.46	11.10	0.84	0.00
25800.	43	51	0.00	52	1.37	0.00197	2.45	2.52	10.10	1.37	0.00
25800.	43	9	0.00	10	18.94	0.00157	0.07	0.00	9.40	18.94	0.00
26400.	44	45	0.00	46	0.28	0.00022	0.93	2.71	7.30	0.28	0.00
26400.	44	43	0.00	44	0.41	0.00046	0.02	0.00	9.30	0.41	0.00
26400.	44	55	0.00	56	0.37	0.00015	0.11	1.31	7.00	0.37	0.00
26400.	44	53	0.00	54	0.52	0.00028	1.30	2.45	7.30	0.52	0.00
26400.	44	70	0.00	71	0.29	0.00075	2.67	3.23	5.60	0.29	0.20
26400.	44	80	0.00	81	0.15	0.00022	1.73	3.45	6.50	0.15	0.00
26400.	44	78	0.00	79	0.40	0.00147	3.38	4.31	6.90	0.40	0.00
26400.	44	76	0.00	77	0.42	0.00157	4.33	5.24	7.00	0.42	0.00

26400.	44	74	0.00	75	0.43	0.00167	5.23	6.70	7.30	0.43	0.00
26400.	44	72	3453.78	73	1.27	0.01459	6.70	3.43	6.70	1.27	0.00
26400.	44	68	54.50	69	1.48	0.01983	6.70	3.27	6.70	1.48	0.00
26400.	44	82	0.00	83	2.34	0.00173	1.71	2.68	8.30	2.34	0.00
26400.	44	66	0.00	67	3.90	0.01589	1.13	0.00	8.00	3.90	0.00
26400.	44	183	0.00	65	1.11	0.00128	1.67	1.69	11.10	1.11	0.00
26400.	44	61	0.00	182	1.13	0.00133	1.85	2.45	11.10	1.13	0.00
26400.	44	9	0.00	10	17.90	0.00140	0.00	0.00	9.40	17.90	0.00
27000.	45	43	0.00	44	0.46	0.00058	0.05	0.01	9.30	0.46	0.00
27000.	45	55	0.00	56	0.37	0.00014	0.10	1.30	7.00	0.37	0.00
27000.	45	70	0.00	71	0.29	0.00075	5.04	5.60	5.60	0.29	0.20
27000.	45	80	0.00	81	0.16	0.00022	1.66	3.38	6.50	0.16	0.00
27000.	45	78	0.00	79	0.40	0.00148	3.40	4.33	6.90	0.40	0.00
27000.	45	76	0.00	77	0.42	0.00158	4.33	5.23	7.00	0.42	0.00
27000.	45	74	0.00	75	0.43	0.00168	5.23	6.70	7.30	0.43	0.00
27000.	45	72	3632.63	73	0.41	0.00150	6.70	6.70	6.70	0.41	0.00
27000.	45	68	0.00	69	0.80	0.00578	1.39	1.47	6.70	0.80	0.00
27000.	45	66	0.00	67	3.23	0.01089	0.68	0.00	8.00	3.23	0.00
27000.	45	183	0.00	65	0.86	0.00077	1.82	1.85	11.10	0.86	0.00
27000.	45	9	0.00	10	18.73	0.00153	0.06	0.00	9.40	18.73	0.00
27600.	46	70	0.00	71	0.17	0.00027	0.58	1.19	5.60	0.17	0.20
27600.	46	80	0.00	81	0.09	0.00008	1.63	3.40	6.50	0.09	0.00
27600.	46	78	0.00	79	0.24	0.00053	3.16	4.33	6.90	0.24	0.00
27600.	46	76	0.00	77	0.25	0.00059	4.08	5.23	7.00	0.25	0.00
27600.	46	74	0.00	75	0.27	0.00065	4.98	6.70	7.30	0.27	0.00
27600.	46	72	2950.73	73	1.59	0.02276	6.70	1.39	6.70	1.59	0.00
27600.	46	68	0.00	69	1.77	0.02846	6.61	1.02	6.70	1.77	0.00
27600.	46	66	0.00	67	3.49	0.01273	0.85	0.00	8.00	3.49	0.00
27600.	46	51	0.00	52	1.93	0.00388	0.06	0.00	10.10	1.91	0.00
27600.	46	9	0.00	10	18.43	0.00148	0.04	0.00	9.40	18.43	0.00
28200.	47	70	0.00	71	0.18	0.00030	5.00	5.60	5.60	0.18	0.20
28200.	47	80	0.00	81	0.11	0.00010	1.40	3.16	6.50	0.11	0.00
28200.	47	78	0.00	79	0.27	0.00066	2.94	4.08	6.90	0.27	0.00
28200.	47	76	0.00	77	0.28	0.00073	3.87	4.98	7.00	0.28	0.00
28200.	47	74	0.00	75	0.30	0.00080	5.02	6.70	7.30	0.30	0.00

0S U R C H A R G E D A T A

TIME SECONDS	TIMESTEP ELEMENT	SURCHARGED CU FT	SURCHARGE ELEMENT	STORAGE CAPACITY CFS.	SURCHARGED SLOPE	SURCHARGED UPSTREAM	CONDUIT-- DOWNSTREAM	MAXIMUM CFS	SURCHARGES--IN--FEET DISCHARGE DROP FT.
28200.	47	72	2961.60	73	0.46	0.00187	6.70	6.61	6.70	0.46	0.00
28200.	47	68	0.00	69	0.65	0.00383	0.62	1.18	6.70	0.65	0.00
28200.	47	66	0.00	67	2.43	0.00618	0.26	0.00	8.00	2.43	0.00
28200.	47	51	0.00	52	1.78	0.00329	0.02	0.00	10.10	1.78	0.00
28800.	48	80	0.00	81	0.10	0.00010	1.18	2.94	6.50	0.10	0.00
28800.	48	78	0.00	79	0.26	0.00063	2.72	3.87	6.90	0.26	0.00
28800.	48	76	0.00	77	0.28	0.00070	3.89	5.02	7.00	0.28	0.00

28800.	48	74	0.00	75	0.29	0.00077	5.01	6.70	7.30	0.29	0.00
28800.	48	72	2227.79	73	1.69	0.02584	6.70	0.62	6.70	1.69	0.00
28800.	48	68	32.58	69	1.84	0.03053	6.70	0.59	6.70	1.84	0.00
28800.	48	66	0.00	67	3.53	0.01301	0.87	0.00	8.00	3.53	0.00
28800.	48	51	0.00	52	1.87	0.00366	0.04	0.00	10.10	1.87	0.00
29400.	49	70	0.00	71	0.18	0.00030	5.00	5.60	5.60	0.18	0.20
29400.	49	80	0.00	81	0.10	0.00010	0.96	2.72	6.50	0.10	0.00
29400.	49	78	0.00	79	0.27	0.00064	2.75	3.89	6.90	0.27	0.00
29400.	49	76	0.00	77	0.28	0.00070	3.89	5.01	7.00	0.28	0.00
29400.	49	74	0.00	75	0.29	0.00077	5.01	6.70	7.30	0.29	0.00
29400.	49	72	2264.52	73	0.41	0.00150	6.70	6.70	6.70	0.41	0.00
29400.	49	68	0.00	69	0.65	0.00384	0.64	1.21	6.70	0.65	0.00
29400.	49	66	0.00	67	2.32	0.00564	0.21	0.00	8.00	2.32	0.00
29400.	49	51	0.00	52	1.74	0.00315	0.01	0.00	10.10	1.74	0.00
30000.	50	80	0.00	81	0.10	0.00010	0.99	2.75	6.50	0.10	0.00
30000.	50	78	0.00	79	0.26	0.00063	2.75	3.89	6.90	0.26	0.00
30000.	50	76	0.00	77	0.28	0.00070	3.89	5.01	7.00	0.28	0.00
30000.	50	74	0.00	75	0.29	0.00077	5.01	6.70	7.30	0.29	0.00
30000.	50	72	1533.31	73	1.69	0.02574	6.70	0.64	6.70	1.69	0.00
30000.	50	68	27.03	69	1.84	0.03073	6.70	0.54	6.70	1.84	0.00
30000.	50	66	0.00	67	3.49	0.01270	0.85	0.00	8.00	3.49	0.00
30000.	50	51	0.00	52	1.81	0.00342	0.03	0.00	10.10	1.81	0.00
30600.	51	70	0.00	71	0.18	0.00030	5.00	5.60	5.60	0.18	0.20
30600.	51	80	0.00	81	0.10	0.00010	0.99	2.75	6.50	0.10	0.00
30600.	51	78	0.00	79	0.26	0.00063	2.75	3.89	6.90	0.26	0.00
30600.	51	76	0.00	77	0.28	0.00070	3.89	5.01	7.00	0.28	0.00
30600.	51	74	0.00	75	0.29	0.00077	5.01	6.70	7.30	0.29	0.00
30600.	51	72	1569.91	73	0.41	0.00150	6.70	6.70	6.70	0.41	0.00
30600.	51	68	0.00	69	0.64	0.00373	0.59	1.18	6.70	0.64	0.00
30600.	51	66	0.00	67	2.27	0.00536	0.19	0.00	8.00	2.27	0.00
30600.	51	51	0.00	52	1.72	0.00307	0.00	0.00	10.10	1.72	0.00
31200.	52	80	0.00	81	0.08	0.00006	0.97	2.75	6.50	0.08	0.00
31200.	52	78	0.00	79	0.20	0.00036	2.68	3.89	6.90	0.20	0.00
31200.	52	76	0.00	77	0.21	0.00041	3.82	5.01	7.00	0.21	0.00
31200.	52	74	0.00	75	0.23	0.00047	4.94	6.70	7.30	0.23	0.00
31200.	52	72	773.95	73	1.69	0.02595	6.70	0.59	6.70	1.69	0.00
31200.	52	68	2.74	69	1.85	0.03082	6.70	0.52	6.70	1.85	0.00
31200.	52	66	0.00	67	3.21	0.01075	0.67	0.00	8.00	3.21	0.00
31800.	53	70	0.00	71	0.14	0.00017	4.99	5.60	5.60	0.13	0.20
31800.	53	80	0.00	81	0.08	0.00006	0.91	2.68	6.50	0.08	0.00
31800.	53	78	0.00	79	0.21	0.00039	2.61	3.82	6.90	0.21	0.00
31800.	53	76	0.00	77	0.22	0.00044	3.75	4.94	7.00	0.22	0.00
31800.	53	74	0.00	75	0.23	0.00050	4.95	6.70	7.30	0.23	0.00

0S U R C H A R G E D A T A

TIME TIMESTEP SURCHARGED SURCHARGE STORAGE SURCHARGED SURCHARGED CONDUIT--
SURCHARGES--IN--FEET DISCHARGE DROP
SECONDS ELEMENT CU FT ELEMENT CAPACITY SLOPE UPSTREAM DOWNSTREAM MAXIMUM
CFS FT.

CFS.

31800.	53	72	752.37	73	0.41	0.00150	6.70	6.70	6.70	0.41	0.00
31800.	53	68	0.00	69	0.56	0.00281	0.18	1.00	6.70	0.56	0.00
31800.	53	66	0.00	67	1.88	0.00369	0.04	0.00	8.00	1.88	0.00
32400.	54	80	0.00	81	0.08	0.00006	0.84	2.61	6.50	0.08	0.00
32400.	54	78	0.00	79	0.21	0.00039	2.55	3.75	6.90	0.21	0.00
32400.	54	76	0.00	77	0.22	0.00044	3.76	4.95	7.00	0.22	0.00
32400.	54	74	0.00	75	0.23	0.00049	4.95	6.70	7.30	0.23	0.00
32400.	54	72	0.00	73	1.62	0.02384	5.76	0.18	6.70	1.62	0.00
32400.	54	68	0.00	69	1.78	0.02868	6.01	0.37	6.70	1.78	0.00
32400.	54	66	0.00	67	3.05	0.00968	0.57	0.00	8.00	3.05	0.00
33000.	55	70	0.00	71	0.14	0.00017	4.99	5.60	5.60	0.13	0.20
33000.	55	80	0.00	81	0.08	0.00006	0.78	2.55	6.50	0.08	0.00
33000.	55	78	0.00	79	0.21	0.00039	2.55	3.76	6.90	0.21	0.00
33000.	55	76	0.00	77	0.22	0.00044	3.76	4.95	7.00	0.22	0.00
33000.	55	74	0.00	75	0.23	0.00049	4.01	5.76	7.30	0.23	0.00
33000.	55	72	0.00	73	0.37	0.00124	5.95	6.01	6.70	0.37	0.00
33600.	56	80	0.00	81	0.08	0.00006	0.78	2.55	6.50	0.08	0.00
33600.	56	78	0.00	79	0.21	0.00039	2.55	3.76	6.90	0.21	0.00
33600.	56	76	0.00	77	0.22	0.00044	2.82	4.01	7.00	0.22	0.00
33600.	56	74	0.00	75	0.23	0.00049	4.19	5.95	7.30	0.23	0.00
34200.	57	80	0.00	81	0.08	0.00006	0.78	2.55	6.50	0.08	0.00
34200.	57	78	0.00	79	0.21	0.00039	1.62	2.82	6.90	0.21	0.00
34200.	57	76	0.00	77	0.22	0.00044	3.00	4.19	7.00	0.22	0.00
34200.	57	72	0.00	73	0.38	0.00133	0.13	0.17	6.70	0.37	0.00
34800.	58	78	0.00	79	0.18	0.00029	1.78	3.00	6.90	0.18	0.00

1METCALF & EDDY, INC. S T O R M W A T E R M A N A G E M E N T M O D E L PAGE 20

0 RUN NO. 0 1 MAIN SYSTEM M1 1 YR. DESIGN STORM

0I N F L O W H Y D R O G R A P H S

0EXTERNAL

ELEMENT NUMBER	TIME STEP 1	2	3	4	5	6	7	8	9	10
22	0.003	0.004	0.004	0.007	0.007	0.019	0.028	0.027	0.027	0.034
	0.033	0.033	0.033	0.033	0.033	0.047	0.045	0.045	0.045	0.045
	0.045	0.064	0.059	0.060	0.060	0.060	0.060	0.109	0.092	0.097
	0.095	0.096	0.096	0.302	0.195	0.244	0.220	0.231	0.226	0.061
	0.108	0.092	0.097	0.095	0.096	0.052	0.062	0.059	0.060	0.060
	0.060	0.042	0.045	0.045	0.045	0.045	0.045	0.031	0.033	0.033
	0.033	0.033	0.033	0.026	0.027	0.027	0.027	0.027	0.027	0.015
	0.015	0.015	0.003	0.001	0.001	0.000	0.000	0.000	0.000	0.000
	0.000	0.000	0.000	0.000	0.000	0.000	0.000	0.000	0.000	0.000
	0.000	0.000	0.000	0.000	0.000	0.000	0.000	0.000	0.000	0.000
	0.000	0.000	0.000	0.000	0.000	0.000	0.000	0.000	0.000	0.000
	0.000	0.000	0.000	0.000	0.000	0.000	0.000	0.000	0.000	0.000
	0.000	0.000	0.000	0.000	0.000	0.000	0.000	0.000	0.000	0.000
	0.000	0.000	0.000	0.000	0.000	0.000	0.000	0.000	0.000	0.000
	0.000	0.000	0.000	0.000	0.000	0.000	0.000	0.000	0.000	0.000

TOTAL VOLUME OF WATER = 2722 CUBIC FEET

20	0.003	0.005	0.006	0.011	0.012	0.023	0.042	0.046	0.047	0.057

0.058	0.058	0.058	0.058	0.058	0.078	0.079	0.079	0.079	0.079
0.079	0.106	0.105	0.105	0.105	0.105	0.105	0.176	0.167	0.169
0.168	0.168	0.168	0.475	0.377	0.408	0.397	0.401	0.400	0.137
0.174	0.167	0.169	0.168	0.168	0.102	0.106	0.105	0.105	0.105
0.105	0.079	0.079	0.079	0.079	0.079	0.079	0.059	0.058	0.058
0.058	0.058	0.058	0.048	0.048	0.047	0.047	0.047	0.047	0.030
0.027	0.027	0.009	0.005	0.003	0.002	0.001	0.001	0.001	0.000
0.000	0.000	0.000	0.000	0.000	0.000	0.000	0.000	0.000	0.000
0.000	0.000	0.000	0.000	0.000	0.000	0.000	0.000	0.000	0.000
0.000	0.000	0.000	0.000	0.000	0.000	0.000	0.000	0.000	0.000
0.000	0.000	0.000	0.000	0.000	0.000	0.000	0.000	0.000	0.000
0.000	0.000	0.000	0.000	0.000	0.000	0.000	0.000	0.000	0.000
0.000	0.000	0.000	0.000	0.000	0.000	0.000	0.000	0.000	0.000
0.000	0.000	0.000	0.000	0.000	0.000	0.000	0.000	0.000	0.000

TOTAL VOLUME OF WATER = 4771 CUBIC FEET

1METCALF & EDDY, INC. S T O R M W A T E R M A N A G E M E N T M O D E L PAGE 21

0 RUN NO. 0 1 MAIN SYSTEM M1 1 YR. DESIGN STORM

0O U T F L O W H Y D R O G R A P H S

0EXTERNAL

ELEMENT NUMBER	TIME STEP 1	2	3	4	5	6	7	8	9	10
198	1.806	3.287	3.774	3.902	4.551	5.011	6.171	7.636	8.578	9.102
	9.464	9.632	9.653	9.638	9.654	9.994	10.522	10.784	10.823	10.802
	10.806	11.303	12.039	12.364	12.387	12.382	12.410	13.753	15.659	16.231
	16.066	16.112	16.421	24.143	26.282	25.636	26.683	24.475	26.634	15.425
	16.314	18.263	18.501	17.471	18.474	18.111	15.878	15.788	16.058	15.799
	14.942	12.214	11.822	11.642	11.712	11.310	11.239	10.674	9.881	9.839
	9.692	9.659	9.591	9.409	9.128	9.000	8.973	8.998	9.011	8.627
	7.836	7.222	6.358	5.261	4.654	4.272	4.023	3.906	3.762	3.710
	3.649	3.613	3.592	3.573	3.553	3.541	3.536	3.532	3.529	3.525
	3.524	3.521	3.519	3.518	3.517	3.516	3.515	3.515	3.514	3.513
	3.513	3.513	3.512	3.512	3.511	3.511	3.511	3.511	3.510	3.510
	3.510	3.510	3.510	3.510	3.510	3.509	3.509	3.509	3.509	3.509
	3.509	3.509	3.509	3.509	3.509	3.509	3.509	3.509	3.508	3.508
	3.508	3.508	3.508	3.508	3.508	3.508	3.508	3.508	3.508	3.508
	3.508	3.508	3.508	3.508	3.508	3.508	3.508	3.508	3.508	3.508

TOTAL VOLUME OF WATER = 706375 CUBIC FEET

MAX. DEPTH AT UPSTREAM END OF DOWNSTREAM CONDUIT = 3.500 FEET

199	1.822	2.935	4.048	4.283	4.645	5.341	6.279	7.710	9.161	9.952
	10.386	10.698	10.801	10.793	10.790	11.114	11.750	12.252	12.401	12.368
	12.366	12.856	13.766	14.346	14.483	14.458	14.494	15.841	18.220	19.486
	19.492	19.480	19.711	28.349	33.565	31.774	34.089	31.183	33.435	19.785
	21.637	22.214	22.653	22.281	22.371	21.841	19.262	18.934	18.579	18.726
	17.853	15.471	14.103	13.986	13.660	13.016	13.090	12.158	11.557	10.969
	10.972	10.914	10.691	10.652	10.149	10.097	9.802	10.042	9.795	9.693
	8.701	8.135	7.164	6.172	5.292	4.863	4.508	4.336	4.209	4.108
	4.044	3.990	3.962	3.944	3.923	3.907	3.898	3.894	3.890	3.886
	3.884	3.882	3.879	3.878	3.877	3.876	3.875	3.874	3.873	3.873
	3.872	3.872	3.871	3.871	3.871	3.870	3.870	3.870	3.870	3.870

3.869	3.869	3.869	3.869	3.869	3.869	3.868	3.868	3.868	3.868
3.868	3.868	3.868	3.868	3.868	3.868	3.868	3.868	3.868	3.868
3.868	3.868	3.867	3.867	3.867	3.867	3.867	3.867	3.867	3.867
3.867	3.867	3.867	3.867	3.867	3.867	3.867	3.867	3.867	3.867

TOTAL VOLUME OF WATER = 820132 CUBIC FEET
MAX. DEPTH AT DOWNSTREAM END OF CONDUIT = 0.000 FEET

0O U T F L O W H Y D R O G R A P H S

0EXTERNAL

ELEMENT NUMBER	TIME STEP 1	2	3	4	5	6	7	8	9	10
170	0.001	0.001	0.001	0.001	0.001	0.001	0.001	0.001	0.001	0.069
	0.382	0.537	0.538	0.546	0.539	0.891	1.449	1.659	1.669	1.673
	1.677	2.144	2.826	2.973	2.935	2.970	2.963	4.109	4.589	4.391
	4.494	4.442	4.543	4.513	4.630	4.633	4.785	5.995	4.512	5.263
	5.672	4.638	5.365	4.889	4.311	3.883	4.262	4.022	3.875	3.902
	3.935	3.778	2.022	1.868	2.289	2.312	2.553	1.947	1.535	1.681
	1.558	1.633	1.483	1.123	0.745	0.684	0.618	0.500	0.363	0.002
	0.002	0.002	0.002	0.002	0.002	0.002	0.002	0.002	0.002	0.002
	0.002	0.002	0.001	0.001	0.001	0.001	0.001	0.001	0.001	0.001
	0.001	0.001	0.001	0.001	0.001	0.001	0.001	0.001	0.001	0.001
	0.001	0.001	0.001	0.001	0.001	0.001	0.001	0.001	0.001	0.001
	0.001	0.001	0.001	0.001	0.001	0.001	0.001	0.001	0.001	0.001
	0.001	0.001	0.001	0.001	0.001	0.001	0.001	0.001	0.001	0.001
	0.001	0.001	0.001	0.001	0.001	0.001	0.001	0.001	0.001	0.001
	0.001	0.001	0.001	0.001	0.001	0.001	0.001	0.001	0.001	0.001

TOTAL VOLUME OF WATER = 100142 CUBIC FEET
MAX. DEPTH AT DOWNSTREAM END OF CONDUIT = 0.000 FEET

222	1.584	1.672	1.746	1.834	1.938	2.161	2.656	3.110	3.308	3.504
	3.707	3.787	3.790	3.793	3.789	4.082	4.462	4.595	4.599	4.605
	4.606	5.048	5.553	5.628	5.609	5.642	5.626	6.810	6.786	6.907
	6.758	6.876	6.860	6.220	6.499	6.241	6.684	6.558	6.349	6.314
	6.714	6.951	6.972	6.291	6.623	6.400	6.908	6.444	6.631	6.342
	6.811	6.265	4.777	4.835	5.130	5.127	5.402	4.730	4.623	4.616
	4.585	4.620	4.477	4.189	3.939	3.930	3.847	3.789	3.664	3.206
	2.866	2.746	2.310	2.017	1.839	1.744	1.688	1.662	1.634	1.617
	1.602	1.587	1.580	1.564	1.558	1.558	1.556	1.554	1.553	1.552
	1.551	1.549	1.549	1.549	1.549	1.548	1.548	1.548	1.548	1.548
	1.547	1.547	1.547	1.547	1.547	1.547	1.547	1.547	1.547	1.547
	1.547	1.547	1.546	1.546	1.546	1.546	1.546	1.546	1.546	1.546
	1.546	1.546	1.546	1.546	1.546	1.546	1.546	1.546	1.546	1.546
	1.546	1.546	1.546	1.546	1.546	1.546	1.546	1.546	1.546	1.546
	1.546	1.546	1.546	1.546	1.546	1.546	1.546	1.546	1.546	1.546

TOTAL VOLUME OF WATER = 285431 CUBIC FEET
MAX. DEPTH AT UPSTREAM END OF DOWNSTREAM CONDUIT = 1.500 FEET

0O U T F L O W H Y D R O G R A P H S

```
 ---------------------------------------
0EXTERNAL
 ELEMENT    TIME STEP
 NUMBER       1       2       3       4       5       6       7       8       9      10

  333       0.770   0.844   0.939   1.058   1.173   1.385   1.912   2.553   2.918   3.122
            3.370   3.557   3.585   3.576   3.590   3.865   4.322   4.598   4.625   4.594
            4.624   5.008   5.598   5.914   5.916   5.892   5.936   6.983   8.437   8.807
            8.625   8.668   9.094  15.124  14.911  14.692  15.020  14.836  15.052  10.753
           10.511  11.552  11.686  10.251  11.153  10.773   8.896   9.256   9.365   9.190
            8.057   5.582   5.444   5.396   5.359   5.152   5.118   4.553   4.033   3.920
            3.857   3.794   3.754   3.559   3.312   3.150   3.143   3.133   3.114   2.808
            2.387   2.206   1.764   1.367   1.158   1.058   1.015   0.911   0.861   0.819
            0.794   0.778   0.778   0.766   0.763   0.759   0.756   0.755   0.753   0.752
            0.751   0.751   0.750   0.749   0.749   0.748   0.748   0.747   0.747   0.747
            0.747   0.746   0.746   0.746   0.746   0.746   0.746   0.746   0.746   0.745
            0.745   0.745   0.745   0.745   0.745   0.745   0.745   0.745   0.745   0.745
            0.745   0.745   0.745   0.745   0.745   0.745   0.745   0.745   0.745   0.745
            0.745   0.745   0.744   0.744   0.744   0.744   0.744   0.744   0.744   0.744
            0.744   0.744   0.744   0.744   0.744   0.744   0.744   0.744   0.744   0.744
        TOTAL VOLUME OF WATER =      300631 CUBIC FEET
        MAX. DEPTH AT UPSTREAM END OF DOWNSTREAM CONDUIT =     1.155 FEET

   16       1.218   2.643   2.873   3.132   3.597   3.962   4.984   6.296   7.105   7.590
            7.881   8.030   8.030   8.024   8.039   8.339   8.783   8.991   9.018   8.988
            9.005   9.455  10.070  10.343  10.357  10.346  10.380  11.626  13.282  13.697
           13.542  13.571  13.954  21.123  22.226  21.219  22.447  20.318  22.371  14.244
           14.338  16.341  16.214  14.947  16.090  15.657  13.410  13.577  13.774  13.552
           12.604   9.990   9.767   9.669   9.763   9.432   9.387   8.829   8.228   8.131
            8.063   7.998   7.965   7.790   7.579   7.468   7.452   7.477   7.490   7.146
            6.414   5.847   5.129   4.213   3.708   3.407   3.259   3.122   3.014   2.959
            2.903   2.873   2.854   2.837   2.818   2.809   2.805   2.802   2.797   2.795
            2.794   2.791   2.789   2.788   2.788   2.786   2.786   2.785   2.785   2.784
            2.784   2.783   2.783   2.783   2.782   2.782   2.782   2.782   2.782   2.781
            2.781   2.781   2.781   2.781   2.781   2.781   2.781   2.780   2.780   2.780
            2.780   2.780   2.780   2.780   2.780   2.780   2.780   2.780   2.780   2.780
            2.780   2.780   2.780   2.780   2.780   2.780   2.779   2.779   2.779   2.779
            2.779   2.779   2.779   2.779   2.779   2.779   2.779   2.779   2.779   2.779
        TOTAL VOLUME OF WATER =      586491 CUBIC FEET
        MAX. DEPTH AT UPSTREAM END OF DOWNSTREAM CONDUIT =     3.170 FEET
1METCALF & EDDY, INC.          S T O R M W A T E R   M A N A G E M E N T  M O D E L                PAGE   24
0                                   RUN NO.  0            1 MAIN SYSTEM M1 1 YR. DESIGN STORM
0O U T F L O W  H Y D R O G R A P H S
 ---------------------------------------
0EXTERNAL
 ELEMENT    TIME STEP
 NUMBER       1       2       3       4       5       6       7       8       9      10

   42       0.676   0.729   0.770   0.822   0.879   1.014   1.252   1.376   1.402   1.443
            1.485   1.498   1.499   1.499   1.498   1.572   1.660   1.665   1.676   1.674
            1.675   1.769   1.873   1.871   1.879   1.881   1.883   2.102   2.350   2.283
            2.341   2.334   2.316   3.583   3.562   4.162   4.004   3.769   3.896   1.040
```

```
          1.744    1.573    1.799    2.072    1.954    2.226    2.121    2.197    2.058    2.126
          2.029    1.955    1.828    1.892    1.795    1.703    1.743    1.605    1.568    1.549
          1.525    1.523    1.516    1.476    1.423    1.415    1.414    1.413    1.412    1.327
          1.254    1.228    1.041    0.879    0.787    0.729    0.698    0.680    0.672    0.669
          0.667    0.663    0.662    0.660    0.659    0.658    0.657    0.657    0.657    0.656
          0.656    0.656    0.656    0.656    0.656    0.655    0.655    0.655    0.655    0.655
          0.655    0.655    0.655    0.655    0.655    0.655    0.655    0.655    0.655    0.655
          0.655    0.655    0.655    0.655    0.655    0.655    0.655    0.655    0.655    0.655
          0.655    0.655    0.655    0.655    0.655    0.655    0.655    0.655    0.655    0.655
          0.655    0.655    0.655    0.655    0.655    0.655    0.655    0.655    0.655    0.655
          0.655    0.655    0.655    0.655    0.655    0.655    0.655    0.655    0.655    0.655
      TOTAL VOLUME OF WATER =      109904 CUBIC FEET
      MAX. DEPTH AT UPSTREAM END OF DOWNSTREAM CONDUIT =     1.250 FEET

  180       0.001    0.001    0.001    0.001    0.001    0.001    0.073    0.224    0.287    0.334
          0.391    0.417    0.420    0.416    0.417    0.538    0.658    0.703    0.702    0.695
          0.702    0.858    1.034    1.071    1.041    1.069    1.058    1.629    1.938    1.921
          1.954    1.962    1.987    4.420    4.627    3.445    4.440    4.000    3.839    2.266
          2.992    2.397    2.688    3.105    2.677    2.239    1.346    2.276    1.255    2.238
          1.208    1.958    0.856    1.818    0.770    0.753    0.730    0.598    0.518    0.468
          0.461    0.456    0.451    0.387    0.321    0.308    0.301    0.300    0.299    0.170
          0.085    0.035    0.001    0.001    0.001    0.001    0.001    0.001    0.001    0.001
          0.001    0.001    0.001    0.001    0.001    0.001    0.001    0.001    0.001    0.001
          0.001    0.001    0.001    0.001    0.001    0.001    0.001    0.001    0.001    0.001
          0.001    0.001    0.001    0.001    0.001    0.001    0.001    0.001    0.001    0.001
          0.001    0.001    0.001    0.001    0.001    0.001    0.001    0.001    0.001    0.001
          0.001    0.001    0.001    0.001    0.001    0.001    0.001    0.001    0.001    0.001
          0.001    0.001    0.001    0.001    0.001    0.001    0.001    0.001    0.001    0.001
          0.001    0.001    0.001    0.001    0.001    0.001    0.001    0.001    0.001    0.001
      TOTAL VOLUME OF WATER =      52856 CUBIC FEET
      MAX. DEPTH AT UPSTREAM END OF DOWNSTREAM CONDUIT =     1.250 FEET
1METCALF & EDDY, INC.          S T O R M W A T E R   M A N A G E M E N T  M O D E L                PAGE  25
0                                   RUN NO.  0            1 MAIN SYSTEM M1 1 YR. DESIGN STORM
0O U T F L O W  H Y D R O G R A P H S
 -------------------------------------
0EXTERNAL
 ELEMENT    TIME STEP
 NUMBER       1        2        3        4        5        6        7        8        9       10

  182       0.487    0.525    0.558    0.606    0.643    0.771    0.927    0.984    1.006    1.022
          1.041    1.050    1.050    1.049    1.050    1.087    1.121    1.133    1.133    1.131
          1.133    1.173    1.215    1.224    1.217    1.223    1.221    1.337    1.392    1.389
          1.394    1.395    1.400    1.714    1.739    2.256    2.104    1.835    1.954    0.481
          0.805    0.663    0.819    1.106    0.862    1.441    1.283    1.447    1.264    1.438
          1.255    1.393    1.174    1.369    1.152    1.145    1.141    1.104    1.081    1.065
          1.063    1.062    1.060    1.040    1.018    1.014    1.011    1.011    1.010    0.964
          0.931    0.913    0.751    0.626    0.563    0.522    0.497    0.484    0.478    0.477
          0.473    0.471    0.470    0.468    0.468    0.466    0.466    0.466    0.466    0.465
          0.465    0.465    0.465    0.465    0.465    0.465    0.464    0.464    0.464    0.464
          0.464    0.464    0.464    0.464    0.464    0.464    0.464    0.464    0.464    0.464
          0.464    0.464    0.464    0.464    0.464    0.464    0.464    0.464    0.464    0.464
          0.464    0.464    0.464    0.464    0.464    0.464    0.464    0.464    0.464    0.464
```

```
        0.464    0.464    0.464    0.464    0.464    0.464    0.464    0.464    0.464    0.464
        0.464    0.464    0.464    0.464    0.464    0.464    0.464    0.464    0.464    0.464
     TOTAL VOLUME OF WATER =       71520 CUBIC FEET
     MAX. DEPTH AT UPSTREAM END OF DOWNSTREAM CONDUIT =     1.000 FEET

  58      0.016    0.019    0.020    0.025    0.026    0.037    0.058    0.066    0.068    0.078
        0.080    0.080    0.080    0.080    0.080    0.102    0.105    0.105    0.105    0.105
        0.105    0.134    0.135    0.135    0.135    0.135    0.135    0.212    0.209    0.209
        0.209    0.209    0.209    0.545    0.465    0.483    0.479    0.480    0.479    0.186
        0.210    0.209    0.209    0.209    0.209    0.136    0.136    0.135    0.135    0.135
        0.135    0.107    0.105    0.105    0.105    0.105    0.105    0.083    0.081    0.080
        0.080    0.080    0.080    0.070    0.068    0.068    0.068    0.068    0.068    0.049
        0.045    0.044    0.025    0.019    0.016    0.015    0.014    0.014    0.014    0.013
        0.013    0.013    0.013    0.013    0.013    0.013    0.013    0.013    0.013    0.013
        0.013    0.013    0.013    0.013    0.013    0.013    0.013    0.013    0.013    0.013
        0.013    0.013    0.013    0.013    0.013    0.013    0.013    0.013    0.013    0.013
        0.013    0.013    0.013    0.013    0.013    0.013    0.013    0.013    0.013    0.013
        0.013    0.013    0.013    0.013    0.013    0.013    0.013    0.013    0.013    0.013
        0.013    0.013    0.013    0.013    0.013    0.013    0.013    0.013    0.013    0.013
        0.013    0.013    0.013    0.013    0.013    0.013    0.013    0.013    0.013    0.013
     TOTAL VOLUME OF WATER =        6702 CUBIC FEET
     MAX. DEPTH AT UPSTREAM END OF DOWNSTREAM CONDUIT =     0.833 FEET
1METCALF & EDDY, INC.          S T O R M W A T E R   M A N A G E M E N T  M O D E L                PAGE   26
0                                  RUN NO.  0            1 MAIN SYSTEM M1 1 YR. DESIGN STORM
0O U T F L O W  H Y D R O G R A P H S
 -------------------------------------
0EXTERNAL
 ELEMENT    TIME STEP
 NUMBER       1       2       3       4       5       6       7       8       9      10

  48      0.013    0.013    0.013    0.013    0.013    0.013    0.013    0.013    0.013    0.013
        0.013    0.013    0.013    0.013    0.013    0.013    0.013    0.013    0.013    0.013
        0.013    0.013    0.013    0.013    0.013    0.013    0.013    0.013    0.013    0.013
        0.013    0.013    0.013    0.013    0.013    0.013    0.013    0.013    0.013    0.013
        0.013    0.013    0.013    0.013    0.013    0.013    0.013    0.013    0.013    0.013
        0.013    0.013    0.013    0.013    0.013    0.013    0.013    0.013    0.013    0.013
        0.013    0.013    0.013    0.013    0.013    0.013    0.013    0.013    0.013    0.013
        0.013    0.013    0.013    0.013    0.013    0.013    0.013    0.013    0.013    0.013
        0.013    0.013    0.013    0.013    0.013    0.013    0.013    0.013    0.013    0.013
        0.013    0.013    0.013    0.013    0.013    0.013    0.013    0.013    0.013    0.013
        0.013    0.013    0.013    0.013    0.013    0.013    0.013    0.013    0.013    0.013
        0.013    0.013    0.013    0.013    0.013    0.013    0.013    0.013    0.013    0.013
        0.013    0.013    0.013    0.013    0.013    0.013    0.013    0.013    0.013    0.013
        0.013    0.013    0.013    0.013    0.013    0.013    0.013    0.013    0.013    0.013
     TOTAL VOLUME OF WATER =        1168 CUBIC FEET
     MAX. DEPTH AT UPSTREAM END OF DOWNSTREAM CONDUIT =     0.084 FEET

  25      1.191    1.834    1.671    2.020    1.895    2.350    2.702    3.308    3.498    3.716
        3.929    4.036    4.038    4.042    4.039    4.296    4.729    4.894    4.903    4.906
        4.910    5.299    5.883    6.010    5.977    6.008    6.002    7.039    7.473    7.292
        7.388    7.339    7.433    7.403    7.515    7.514    7.658    7.798    7.401    6.849
```

7.203	7.518	7.700	6.976	7.218	6.824	7.178	6.950	6.822	6.841
6.875	6.729	5.191	5.064	5.418	5.439	5.645	5.130	4.794	4.913
4.813	4.875	4.752	4.470	4.186	4.141	4.093	4.009	3.913	3.475
3.070	2.925	2.533	2.154	1.987	1.860	1.806	1.764	1.743	1.719
1.706	1.689	1.681	1.668	1.659	1.659	1.657	1.654	1.653	1.653
1.651	1.650	1.649	1.649	1.649	1.648	1.648	1.648	1.648	1.648
1.648	1.647	1.647	1.647	1.647	1.647	1.647	1.647	1.647	1.647
1.647	1.647	1.647	1.646	1.646	1.646	1.646	1.646	1.646	1.646
1.646	1.646	1.646	1.646	1.646	1.646	1.646	1.646	1.646	1.646
1.646	1.646	1.646	1.646	1.646	1.646	1.646	1.646	1.646	1.646
1.646	1.646	1.646	1.646	1.646	1.646	1.646	1.646	1.646	1.646

TOTAL VOLUME OF WATER = 306230 CUBIC FEET

MAX. DEPTH AT UPSTREAM END OF DOWNSTREAM CONDUIT = 1.500 FEET

1METCALF & EDDY, INC. S T O R M W A T E R M A N A G E M E N T M O D E L PAGE 27

0 RUN NO. 0 1 MAIN SYSTEM M1 1 YR. DESIGN STORM

0O U T F L O W H Y D R O G R A P H S

0EXTERNAL

ELEMENT NUMBER	TIME STEP 1	2	3	4	5	6	7	8	9	10
20	0.994	1.947	1.578	2.151	1.990	2.385	2.845	3.384	3.692	3.801
	3.786	3.691	3.706	3.697	3.702	3.658	3.545	3.486	3.485	3.484
	3.483	3.463	3.381	3.341	3.352	3.352	3.347	3.381	3.344	3.328
	3.358	3.349	3.347	3.904	3.830	3.841	3.877	2.714	3.958	1.929
	1.971	3.422	2.870	2.614	3.354	3.269	3.244	3.247	3.267	3.262
	3.259	3.212	3.391	3.472	3.388	3.373	3.350	3.378	3.459	3.441
	3.451	3.450	3.464	3.526	3.607	3.640	3.650	3.685	3.724	3.638
	3.252	3.049	2.675	2.278	2.079	1.948	1.880	1.842	1.814	1.793
	1.776	1.762	1.750	1.740	1.728	1.728	1.726	1.724	1.723	1.722
	1.721	1.719	1.719	1.719	1.718	1.718	1.718	1.717	1.717	1.717
	1.717	1.717	1.717	1.717	1.716	1.716	1.716	1.716	1.716	1.716
	1.716	1.716	1.716	1.716	1.716	1.716	1.716	1.716	1.716	1.716
	1.716	1.716	1.716	1.715	1.715	1.715	1.715	1.715	1.715	1.715
	1.715	1.715	1.715	1.715	1.715	1.715	1.715	1.715	1.715	1.715
	1.715	1.715	1.715	1.715	1.715	1.715	1.715	1.715	1.715	1.715

TOTAL VOLUME OF WATER = 223155 CUBIC FEET

MAX. DEPTH AT UPSTREAM END OF DOWNSTREAM CONDUIT = 1.500 FEET

RUN IDENTIFICATION:1 MAIN SYSTEM M1 1 YR. DESIGN STORM

0S U R C H A R G E S U M M A R Y D A T A

ELEMENT NUMBER	TIMES SURCHARGED	SURCHARGE VOL(FT3)	U/S SURCHARGE(FT)	D/S SURCHARGE(FT)
3	5	0.	0.18	0.00
5	6	0.	0.39	0.18
9	11	0.	0.82	0.00
11	6	0.	0.77	0.82
13	6	0.	0.70	0.77
15	7	0.	0.94	1.03
17	8	0.	2.63	2.61
19	5	0.	1.55	2.63

21	2	0.	0.53	2.38
24	3	0.	0.81	1.80
171	1	0.	0.00	0.00
26	1	0.	0.01	0.00
28	2	0.	0.34	0.41
41	9	0.	3.06	2.95
43	18	0.	3.86	3.48
45	6	0.	2.24	3.86
51	22	0.	3.75	3.31
53	8	0.	2.63	3.75
55	6	0.	1.41	2.63
57	2	0.	0.34	1.58
61	10	0.	3.69	3.75
183	12	0.	3.66	3.69
62	7	0.	4.14	2.64
64	8	0.	4.97	4.14
181	9	0.	4.98	4.97
66	33	0.	6.63	5.23
68	27	481.	6.70	6.70
70	23	0.	5.40	5.60
72	35	3794.	6.70	6.70
74	27	0.	6.67	6.70
76	24	10.	7.00	6.67
78	25	171.	6.90	6.90
80	22	0.	5.09	6.50
82	10	0.	6.23	6.38
84	8	0.	5.33	6.23
86	5	0.	3.13	5.33
88	4	0.	1.95	3.13
90	1	0.	0.36	2.14
92	1	0.	0.42	1.95

1ENDPROGRAM BLOCK CALLED.

* * * * * STORMWATER SIMULATION ENDED NORMALLY * * * * *

Main System Base Map for Model Development

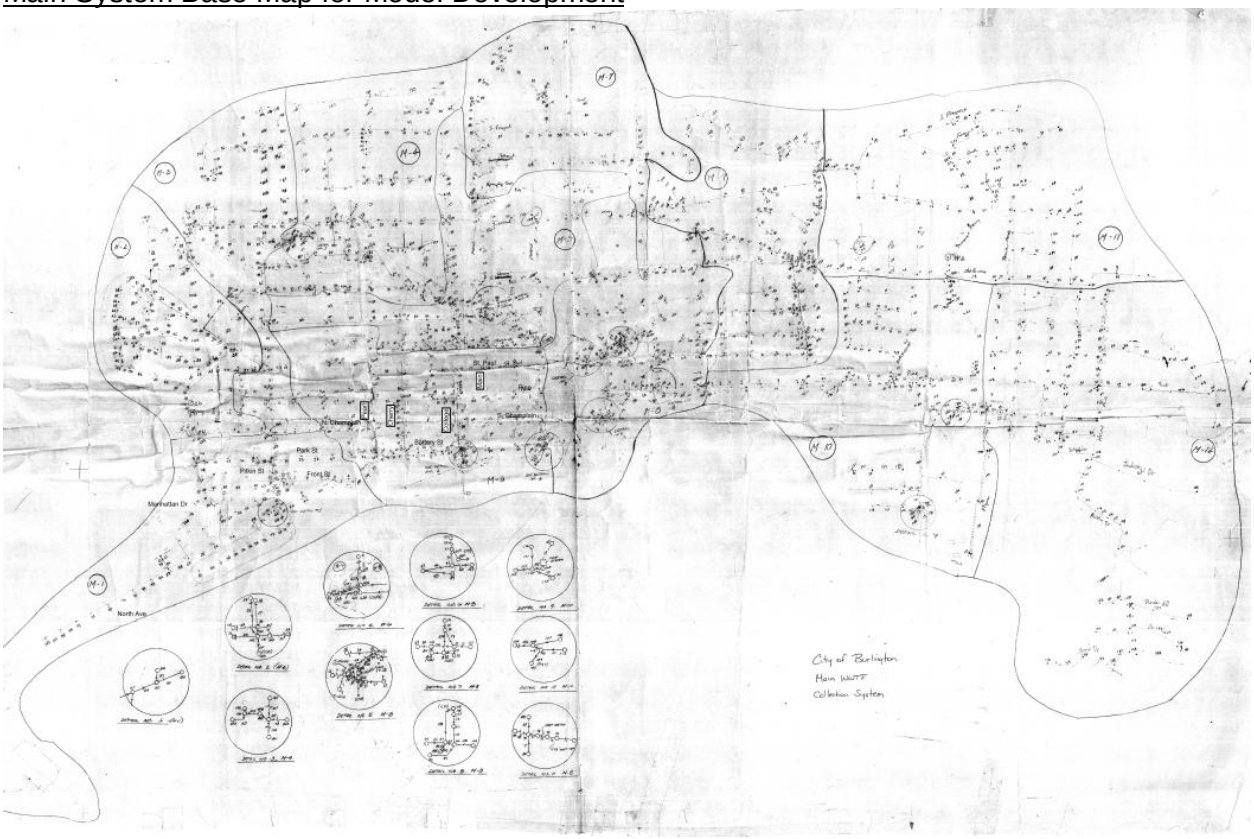

Main System Subarea Flow Schematic

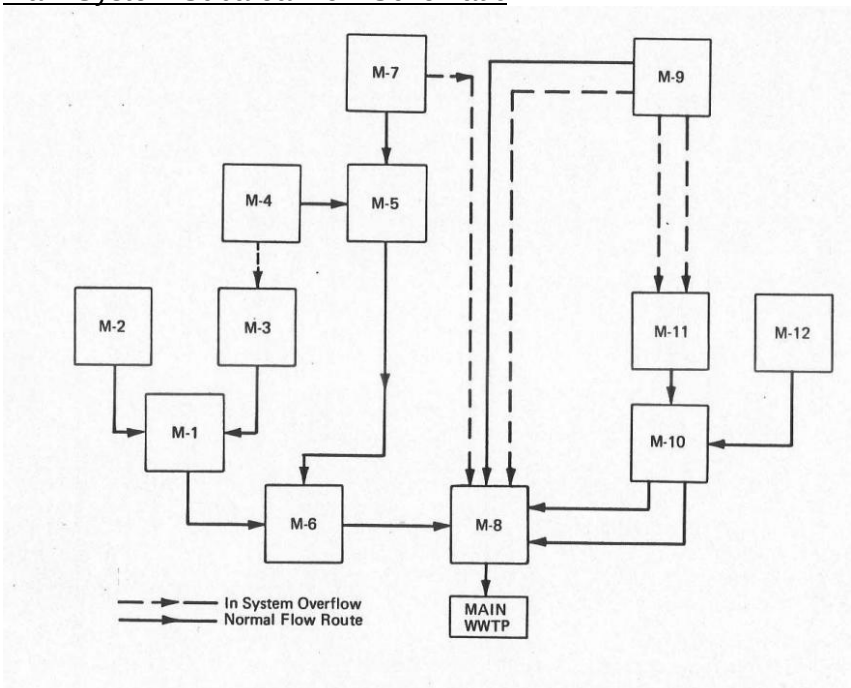

FIG. 5-12. SWMM SUBAREA FLOW SCHEMATIC FOR THE MAIN SEWER SYSTEM

Examples of Sewer Separation Work Done

RAVINE SEWER RELOCATION

CONTRACT NO. 2

JUNE 1986

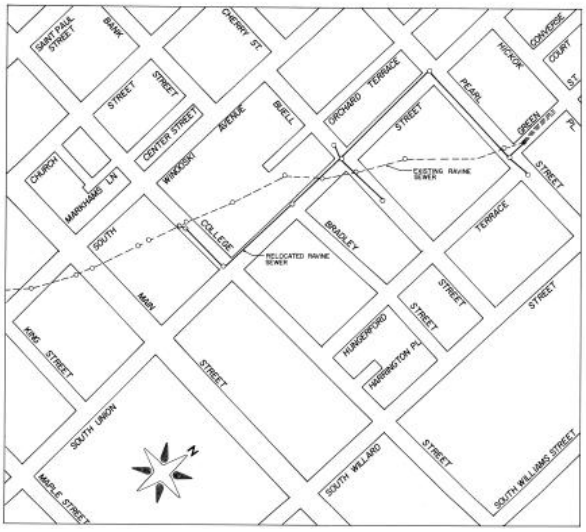

INDEX OF DRAWINGS

DWG. NO.	TITLE
1	COLLEGE STREET PLAN-PROFILE STA 9+70 TO 12+55
2	SOUTH UNION STREET-COLLEGE ST TO BRADLEY ST. PLAN-PROFILE STA 12+55 TO 16+44
3	SOUTH UNION STREET-BRADLEY ST TO BUELL ST. PLAN-PROFILE STA 16+44 TO 19+11
4	SOUTH UNION STREET-BUELL ST. TO PEARL ST. PLAN-PROFILE STA 19+11 TO 24+44
5	PEARL STREET PLAN-PROFILE STA 24+44 TO 29+18
6	BUELL STREET STA 19+11, GREEN STREET STA 29+18 PLAN-PROFILE
7	RAVINE SEWER ABANDONMENT DETAILS
8	INTERCONNECTION STRUCTURE MANHOLE NO.1 STA 9+70
9	DETAILS MANHOLE NO.S 2,3, AND 4
10	DETAILS MANHOLE NO.S 5,6, AND 7
11	DETAILS-SERVICE CONNECTIONS, TRENCH AND ROAD TYPICALS
12	DETAILS-MANHOLE, CATCH BASIN, AND WATER SERVICE
13	OVERHEAD UTILITY PLAN PEARL ST. AND COLLEGE ST.
14	OVERHEAD UTILITY PLAN SOUTH UNION STREET
15	ROAD AND CURB PROFILE PEARL ST. AND COLLEGE ST.
16	ROAD AND CURB PROFILE SOUTH UNION STREET

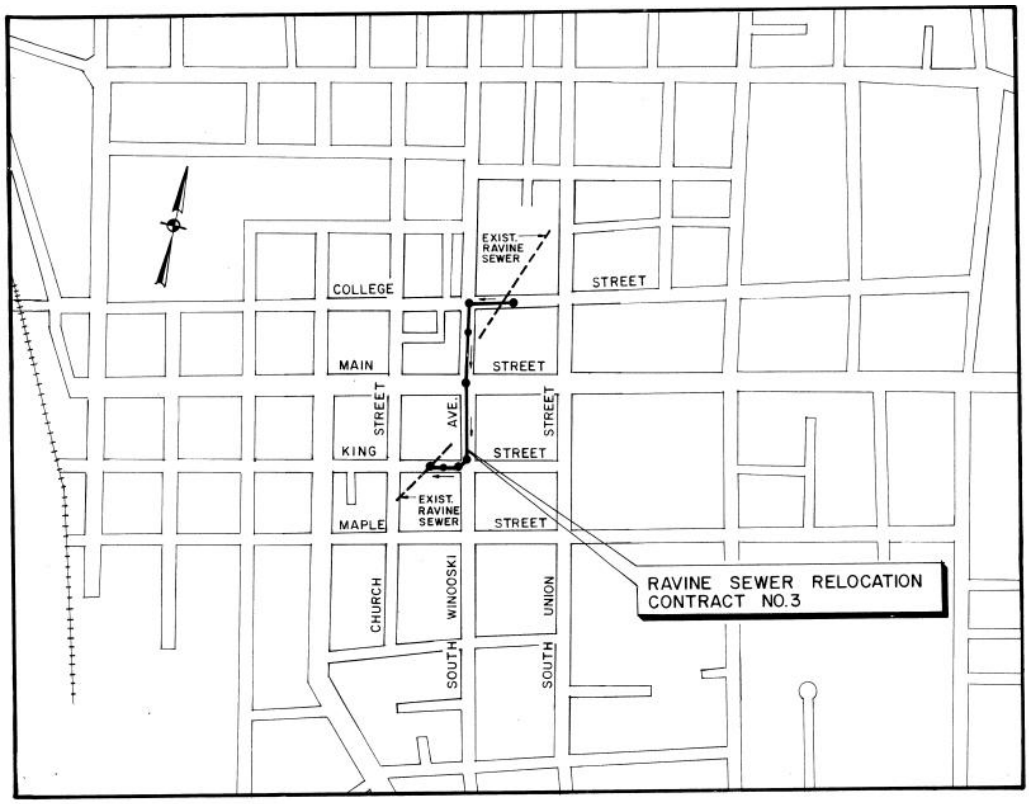

CITY OF BURLINGTON, VERMONT
AGREEMENT FOR PLANNING AND ENGINEERING SERVICES BY AND BETWEEN THE CITY OF BURLINGTON, VERMONT
AND
[redacted]

Project[redacted]

THIS AGREEMENT is made this _____ day of _____, 2013 by and between the City of Burlington, a Vermont municipal corporation, hereinafter referred to as CITY and [redacted] a limited liability corporation, with its principal place of business at[redacted] authorized to do business in Vermont, hereinafter referred to as CONSULTANT.

WHEREAS, the CITY published a request for proposals (RFP) for consultant services to assist in [redacted]on February 15, 2013, hereinafter known as THE PROJECT, in the City of Burlington, Vermont; and

WHEREAS, funds for this project are provided by the FY 13 Stormwater Special Revenue Fund and by grant funds of[redacted] accepted via a resolution adopted by the Burlington [redacted] and

WHEREAS, the CONSULTANT filed a timely response to the RFP that the City issued for THE PROJECT and was selected by the selection committee as the consultant most capable of providing consultant services for THE PROJECT and is ready, willing, and able to perform the required services in the time required;

WHEREAS, the Parties know and accept that the CONSULTANT will be subcontracting with the following subconsultants:[redacted]for portions of THE PROJECT;

NOW THEREFORE, in consideration of the promises and the mutual covenants herein set forth, it is agreed by the parties hereto as follows:

1. SCOPE OF WORK

A. The CONSULTANT agrees to provide the planning and engineering tasks set forth in the attached Scope of Work (Attachments A and B) for THE PROJECT, consisting of[redacted]

[redacted]

B. Additionally, the CONSULTANT agrees to perform the work in compliance with Attachment D, the "STANDARD CONTRACT PROVISIONS," Attachment E, the City's Outsourcing Ordinance, Ch. 21 Article VII, and Attachment F, the City's Livable Wage Ordinance, Ch. 21 Article VI, all of which are incorporated herein and made a part of this Agreement.

C. In the event of any conflict between an attachment and the AGREEMENT, the AGREEMENT will be controlling.

2. **SUBCONSULTANTS**

A. The Parties agree that the following subconsultants will perform services under this AGREEMENT [redacted]

B. The subconsultants' compensated involvement in THE PROJECT shall be restricted by the hours listed for each task in Attachment C: Cost Proposal.

C. Any changes to the extent and cost of subconsultant involvement must receive prior written consent of the CITY.

D. All subconsultants, including the ones listed above, are subject to all applicable contract provisions and are specifically subject to the City's Livable Wage Ordinance and Certification requirements stated below in Section 5C.

3. BEGINNING, COMPLETION and TERMINATION OF WORK

This AGREEMENT shall be effective upon execution and shall be terminated on or before March 31, 2014. The CONSULTANT agrees to begin performance of services specified in the AGREEMENT and in accordance with the terms of the AGREEMENT, within 7 days of execution of this AGREEMENT and to complete the contracted services by the completion dates specified below in Section "4. Expected Deliverables." The contract may be amended by the CITY to extend the period of performance. In addition to the following provisions related to termination, the Parties acknowledge and accept the terms related to termination in the Attachment D, Standard Contract Provisions.

A. Failure of the CONSULTANT to comply with the terms of this contract or to fail to complete the elements described in future scopes of work within the Period of Performance shall be deemed a material breach of this contract and may constitute termination without the necessity of written notice.

B. Failure of the CITY to pay the CONSULTANT as agreed upon and in a timely manner shall be deemed a material breach of this Contract and may constitute termination without the necessity of written notice.

C. Upon completion of all services covered under the Agreement and payment of the agreed upon fee, the Agreement with its mutual obligations shall be terminated.

4. EXPECTED DELIVERABLES

The CONSULTANT agrees that work to be performed under the Agreement shall include the following deliverables due by the dates provided:

A. [redacted]

Deliverable Standards

A. All documents should be provided in both paper and digital form in Microsoft Word or PDF format. Mapping should be provided on 11 x 17 sheets or larger format sheets where appropriate. All written reports should be double-sided where possible.

B. All materials produced, including but not limited to the above referenced materials, shall become the property of the CITY upon delivery.

C. Related spatial and/or geographic information must be developed in accordance with the Vermont Geographic Information System (VGIS) standards as adopted by the Vermont Center for Geographic Information (VCGI). Data shall be delivered in a GIS File Geodatabase feature dataset (NAD 83, Vermont State Plane Feet). The attribute tables will include information determined necessary by the selected consultant and the City of Burlington. Metadata MUST accompany each feature class and include, at a minimum, the method used to derive the layer and the definitions of each of the attributes.

5. CONDITIONS

A. All work shall be completed in compliance with the expected deliverables, scope of work and schedule. Any significant problems, delays or adverse conditions, actual or anticipated, which will materially affect the project objectives or prevent the timely completion of the project, shall promptly be brought to the attention of the CITY.

B. Acknowledgment of the City of Burlington's support must be included in any and all publications, renderings and project publicity, including audio/visual materials developed under this contract.

C. The CONSULTANT shall submit a Certifications of Compliance with the City of Burlington's Livable Wage Ordinance and Outsourcing Ordinance for the CONSULTANT and any SUB-CONSULTANTS to the PROJECT MANAGER prior to the initiation of work under this AGREEMENT.

C. The CONSULTANT shall conform to the text of 18 U.S.C. 1913, which prohibits the use of subgrant funds for lobbying.

D. The CONSULTANT shall comply with Public Law 98-502 and 104-156, Single Audit Act of 1984 and Single Audit Act Amendments of 1996.

E. The CONSULTANT shall provide free and open access to the CITY and its authorized representatives to the project and all accounts, records, information and books relative thereof including the right to make excerpts and transcripts.

F. The CONSULTANT shall furnish the CITY with progress reports with each invoice. The report shall indicate any matters that have or are anticipated to

adversely affect progress of work. The CITY may require the Consultant to prepare a revised work schedule in the event that a specific progress achievement falls behind the schedule progress by more than thirty (30) days. Pursuant with section 3.A, the CITY shall review any revised work schedule submitted in response to such a request, and in its discretion, may amend the "deliverables" dates. Any such amendment shall be in writing.

G. All maps, data, photographs, slides, renderings, reports, discs, CAD models and material related to this Contract shall be accessible to, and become the property of the City. In the event the CITY, the CITY's contractors or subcontractors, or anyone for whom the CITY is legally liable makes or permits changes to electronic files related to Hydrologic Modeling and/or GIS prepared by the CONSULTANT and accepted by the CITY as a final deliverable after the deliverable receipt date, the CITY shall assume full responsibility for the results of such changes and waive any claim
against the CONSULTANT and to release the CONSULTANT from any liability arising directly or indirectly from such changes.

H. INSURANCE

GENERAL: Prior to beginning any work the Consultant shall obtain the following insurance coverage from an insurance company registered and licensed to do business in the State of Vermont and having an A.M. Best insurance rating of at least A-, financial size category VII or greater (www.ambest.com). The certificate of insurance coverage shall be documented on forms acceptable to the Municipality. Evidence of compliance with minimum limits and coverages, evidenced by a certificate of insurance showing policies and carriers that are acceptable to the Municipality, must be received prior to the effective date of the Agreement. The insurance policies shall provide that insurance coverage cannot be canceled or revised without thirty (30) days prior notice to the Municipality. In the event that this Contract extends to greater than one year, evidence of continuing coverage must be submitted to the Municipality on an annual basis. Certified copies of any insurance policies may be required. Each policy (with the exception of professional liability and workers compensation) shall name the CITY as an additional insured for the possible liabilities resulting from the Consultant's actions or omissions. It is agreed that the liability insurance furnished by the Consultant is primary and non-contributory for all the additional insureds.

The Consultant is responsible to verify and confirm in writing to the CITY that:

(a) All subconsultants, agents or workers meet the minimum coverages and limits plus maintain current certificates of coverage for all subconsultants, agents or workers. Subconsultants and contractors must comply with the same insurance requirements as the Consultant.

(b) All coverages shall include adequate protection for activities involving

hazardous materials.

(c) All work activities related to the agreement shall meet minimum coverages and limits.

No warranty is made that the coverages and limits listed herein are adequate to cover and protect the interests of the Consultant for the Consultant's operations. These are solely minimums that have been developed and must be met to protect the interests of the Municipality.

GENERAL LIABILITY AND PROPERTY DAMAGE:

With respect to all operations performed by the Consultant, subconsultants, agents or workers, it is the Consultant's responsibility to insure that general liability insurance coverage, on an occurrence form, provides all major divisions of coverage including, but not limited to and with limits not less than:

1. Premises Operations
2. Independent Contractors' Protective
3. Products and Completed Operations
4. Personal Injury Liability
5. Contractual Liability
6. Broad Form Property Damage
7. Medical Expenses
8. Collapse, Underground and Explosion Hazards

1. General Aggregate	$2,000,000
2. Products-Completed/Operations Aggregate	$2,000,000
3. Personal & Advertising Injury	$1,000,000
4. Each Occurrence	$1,000,000
5. Fire Damage (Any one fire)	$ 250,000
6. Med. Expense (Any one person)	$ 5,000

WORKERS' COMPENSATION: With respect to all operations performed, the Consultant shall carry workers compensation insurance in accordance with the laws of the State of Vermont and ensure that all subconsultants and subcontractors carry the same workers' compensation insurance for all work performed by them under this contract. Minimum limits for Employer's Liability:

(a) Bodily Injury by Accident: $500,000 each accident
(b) Bodily Injury by Disease: $500,000 policy limit, $500,000 each employee

PROFESSIONAL LIABILITY INSURANCE:

(a) General. The Consultant shall carry architects/engineers/professional liability insurance covering errors and omissions made during their performance of contractile duties with the following minimum limits:
$1,000,000 - Annual Aggregate
$1,000,000 - Per Occurrence

(b) Deductibles. The Consultant is responsible for any and all deductibles.

(c) Coverage. Prior to performing any work, the Consultant agrees to provide evidence of E&O insurance coverage defined under this Section. In addition, the Consultant agrees to attempt to maintain continuous professional liability coverage for the period of the agreement and whenever applicable any construction work related to this agreement, and for a period of five years following substantial completion, if such coverage is reasonably available at commercially affordable premiums.

VALUABLE PAPERS INSURANCE: The Consultant shall carry valuable papers insurance in a form and amount sufficient to ensure the restoration or replacement of any plans, drawings, field notes, or other data relating to the work, whether supplied by the Municipality or developed by the Consultant, subconsultant, worker or agent, in the event of loss, impairment or destruction of these documents. Such coverage shall remain in force until the final plans, and all related materials, have been delivered by the Consultant to, and accepted by, the Municipality.

The policy shall provide coverage on an each occurrence basis with limits not less than:

Valuable Papers	$10,000
Electronic Data Media	$10,000

AUTOMOBILE LIABILITY: The Consultant shall carry commercial automobile liability insurance covering all motor vehicles, including owned, non-owned and hired, used in connection with the agreement. Each policy shall provide coverage with a limit not less than: $1,000,000 - Combined Single Limit for each occurrence.

6. THE AGREEMENT FEE

The CITY agrees to pay the CONSULTANT and the CONSULTANT agrees to accept as full compensation for performance of [redacted] the time and material amounts provided in Attachment C: Cost Proposal. The total compensation under this contract shall not exceed the following amounts:

A[redacted]

B[redacted]

C. [redacted]

7. RELATIONSHIP

The CONSULTANT accepts a relationship of trust and confidence with the CITY, which will be relying upon the CONSULTANT's expert services. The CONSULTANT will perform its work under this Agreement utilizing at least that level of professional competence, which is consistent with usual and customary engineering services in Burlington, Vermont.

The parties agree that the CONSULTANT is an independent contractor. To that end, the CONSULTANT shall determine the method, details, and means of performing the work, but will comply with all legal requirements in doing so. City shall provide the CONSULTANT with no specific instructions or training in how to provide the required services, except to the extent required by law or regulation. The CONSULTANT shall provide its own tools, materials or equipment. The parties agree that neither the CONSULTANT nor its Principal is an employee of City or any of its departments, agencies, or related entities. The parties also agree that neither the CONSULTANT nor its Principal is entitled to any employee benefits from City. CONSULTANT understands and agrees that it and its Principal have no right to claim any benefits under the Burlington Employee Retirement System, City's worker's compensation benefits, health insurance, dental insurance, life insurance or any other employee benefit plan offered by City. The CONSULTANT agrees to execute any certifications or other documents and provide any certificates of insurance required by City and understands that this contract is conditioned on its doing so, if requested.

The CONSULTANT understands and agrees that it is responsible for the payment of all taxes on the above sums and that City will not withhold or pay for Social Security, Medicare, or other taxes or benefits or be responsible for any unemployment benefits.

8. PAYMENT PROCEDURES

1. Separate invoices shall be prepared for Items 1 and 2. Each invoice shall be accompanied by a summary of the hours spent by each member of the team, with brief notes on what was accomplished. The invoice shall include a summary of charges to date, the amount of the current invoice, and the contract amount remaining for each item.

2. Invoices and associated documents shall be submitted electronically to Megan Moir, Stormwater Program Manager at mmoir@burlingtonvt.gov with the title INVOICE #(reference invoice #) COLLEGE STREET in the subject line.

9. PUBLIC RECORDS AND RETENTION

The CONSULTANT understands that any and all records related to City, whether

electronic, paper, or otherwise recorded, are subject to the Vermont Public Records Act and that the determination of how those records must be handled is solely within the purview of City. The CONSULTANT agrees to retain, in its files, and to produce to City within the time periods requested, all books, documents, accounting records, and other evidence related to City, at any time during this Agreement and for a period of at least three (3) years after its termination.

10. BINDING NATURE AND JURISDICTION

This agreement shall be binding upon and shall inure to the benefit of the parties hereto, their successors or heirs and representatives, and assigns. This agreement shall be governed by Vermont law, and the CONSULTANT expressly agrees to submit to the jurisdiction of the courts of the State of Vermont.

11. ENTIRE AGREEMENT AND AMENDMENTS

The parties acknowledge that this Agreement is the entire agreement between the parties and that there are no representations, inducements, arrangements, promises, or agreements outstanding between them, either oral or in writing, other than those. No provision of this Agreement shall be changed or modified except by a written instrument executed by both parties hereto.

12. WAIVER

No waiver by City of any breach of this Agreement by the CONSULTANT shall constitute a waiver of any subsequent breach by the CONSULTANT, and no delay in enforcement of any breach shall be deemed a waiver of that breach.

13. SEVERABILITY

If any provision of this Agreement is rendered invalid or unenforceable by the decision of any court of competent jurisdiction, that provision shall be severed, and all other provisions of this Agreement shall remain in full force and effect.

14. NO ASSIGNMENT

The CONSULTANT may not assign its rights or obligations under this Agreement without the express written consent of City as specified in the Standard Contract Provisions set forth in Attachment D.

15. BINDING NATURE

This Agreement shall be binding upon and inure to the benefit of the parties, their respective successors, and permitted assigns.

IN WITNESS WHEREOF, the parties hereto have caused this Agreement to be executed as of the day and year first above written.

By:

Printed Name

Title:

Date:

CITY OF BURLINGTON, VERMONT

By:

Title

Date:

Detailed Scope of Work would be included as attachment to contract. Expected Deliverables and deadlines could be as referenced attachment or directly in AGREEMENT.

STANDARD CONSULTANT CONTRACT PROVISIONS:

Wherever used, abbreviations may be used in place of a word or phrase and definitions may be used to interpret statements for the meaning of words phrases or expressions. The intent and meaning for abbreviations and definitions shall be interpreted as herein set forth:

AASHTO	American Association of State Highway and Transportation Officials
AGC	Associated General Contractors of America
AIA	American Institute of Architects
ANR	Agency of Natural Resources
ANSI	American National Standards Institute
ASCE	American Society of Civil Engineers
AWS	American Welding Society
CADD	Computer Aided Drafting and Design
CES	Contractor Engineering Services
CFR	Code of Federal Regulations
DOT	United States Department of Transportation
EEO	Equal Employment Opportunity
EIS	Environmental Impact Statement
EDM	Electronic Data Media
FAA	Federal Aviation Administration
FAR	Federal Acquisition Regulation
FHWA	Federal Highway Administration, U.S. Department of Transportation
FRA	Federal Railroad Administration
FSS	Federal Specifications and Standards (General Services Administration)
FTA	Federal Transit Administration
SIR	Self Insured Retention
U.S.C.	United States Code
USEPA	United States Environmental Protection Agency
VAOT	Vermont Agency of Transportation
VOSHA	Vermont Occupational Safety and Health Act
VSA	Vermont Statutes Annotated

1. INDEMNIFICATION

The Consultant will act in an independent capacity and not as officers or employees of the Municipality. The Consultant shall indemnify, defend and hold harmless the Municipality and its officers and employees from liability and any claims, suits, expenses, losses, judgments, and damages arising as a result of the Consultant's negligent acts and/or omissions in the performance of this contract.

The Municipality is responsible for its own actions. The Consultant is not obligated to indemnify the Municipality or its officers, agents and employees for any liability of the Municipality, its officers, agents and employees attributable to its, or their own, negligent acts, errors or omissions.

In the event the Municipality, its officers, agents or employees are notified of any claims asserted against it or them to which this Indemnification clause may apply, the Municipality or its officers, agents and employees shall immediately thereafter notify the Consultant in writing that a claim to which the Indemnification Agreement may apply has been filed.

2. INSURANCE
See Section 4. H of the AGREEMENT.

3. COMPLIANCE WITH LAWS

GENERAL COMPLIANCE WITH LAWS: The Consultant shall comply with all applicable Federal, State and local laws, including but not limited to the Burlington Livable Wage Ordinance and the Non-outsourcing Ordinance and shall provide the required certifications attesting to compliance with these ordinances (see attached ordinances and certifications).

Provisions of the Agreement shall be interpreted and implemented in a manner consistent with each other and using procedures that will achieve the intent of both parties. If, for any reason, a provision in the Agreement is unenforceable or invalid, that provision shall be deemed severed from the Agreement, and the remaining provisions shall be carried out with the same force and effect as if the severed provisions had never been a part of the Agreement.

ENVIRONMENTAL REGULATIONS: Any Contract in excess of one hundred thousand dollars shall comply with all applicable standards, orders or requirements issued under Section 306 of the Clean Air Act (42 U.S.C. § 1857(h)), Section 508 of the Clean Air Act (33 U.S.C. § 1368), Executive Order 11738, and Environmental Protection Municipality regulation (40 CFR Part 15), that prohibit the use, under non-exempt Federal Contracts, grants or loans, of facilities included on the EPA list of Violating Facilities. The provisions require reporting of violations to the grantor, Municipality and to the USEPA Assistant Administrator for Enforcement (EN-329).

CIVIL RIGHTS and EQUAL EMPLOYMENT OPPORTUNITY: During performance of the Agreement, the Consultant will not discriminate against any employee or applicant for employment because of race, age, color, religion, sex, sexual orientation, gender identify, national origin, physical disability or veteran status.

The Consultant shall comply with the applicable provisions of Title VI of the Civil Rights Act of 1964 as amended, Executive Order 11246 as amended by Executive Order 11375 and as supplemented by the Department of Labor regulations (41 CFR Part 60). The

Consultant shall also comply with the rules, regulations and relevant orders of the Secretary of Labor, Nondiscrimination regulations 49 CFR § 21 through Appendix C, and Regulations under 23 CFR§710.405 (b) . Accordingly, all subcontracts shall include reference to the above. The Consultant shall comply with all the requirements of Title 21, VSA, Chapter 5, Subchapter 6 and 7, relating to fair employment practices to the extent applicable. A similar provision shall be included in any and all subcontracts.

DEBARMENT CERTIFICATION: When signing a Contract in excess of twenty five thousand dollars, the Consultant certifies under the penalty of perjury as directed by Federal laws (48 CFR 52.209-5), that, except as noted in the Agreement, the Consultant or any person associated therewith in the capacity of owner, partner, director, officer, principal investigator, project director, manager, auditor, or any position involving the administration of federal funds:

(a) is not currently under suspension, debarment, voluntarily exclusion or determination of ineligibility by any Federal agency;

(b) has not been suspended, debarred, voluntarily excluded or determined ineligible by any Federal agency within the past three (3) years;

(c) does not have a proposed debarment pending; and

(d) has not been indicted, convicted, or had a civil judgment rendered against him/her by a court of competent jurisdiction in any matter involving fraud or official misconduct within the past three (3) years.

Exceptions will not necessarily result in denial of the Contract but will be considered in determining the Consultant's responsibility. The Agreement shall indicate any exception and identify to whom or to what Municipality it applies and dates of action. Providing false information may result in criminal prosecution or administrative sanctions.

Exceptions shall be noted in the Contract:

LOBBYING: For any Agreement exceeding one hundred thousand dollars, the Consultant certifies by signing the Agreement, that to the best of their knowledge and belief on behalf of their signature:

(a) No Federal appropriated funds have been paid or will be paid by or to any person influencing or attempting to influence an officer or employee of a government agency, a Member of Congress, an officer or employee of Congress, or an employee of a Member of Congress in connection with the awarding of any Federal Contract, the making of any Federal grant, the making of any Federal loan, the entering into of any cooperative agreement, or the extension, renewal, amendment or modification of any Federal Contract grant, loan or cooperative Agreement.

(b) They will complete and submit, in accordance with its instructions, Standard Form-LLL "Disclosure Form to Report Lobbying", if any funds, other than Federal appropriated funds, have been paid or will be paid to any person for influencing or attempting to influence an officer or employee of a government agency or a Member of Congress in connection with the Federal Agreement, grant loan, or cooperative Agreement.

(c) They shall require that the language of this Certification be included in the award documents for all subawards at all tiers (including subconsultants, subgrants and contracts under grants, loans and cooperative agreements) and that all subrecipients shall certify and disclose accordingly.

This certification is a material representation of fact, upon which reliance was placed when the Agreement was made or entered into. Submission of this certification is a prerequisite for making or entering into the Agreement, imposed by Section 1352, Title 31, U.S.C..

Section 1352 of Title 31, U.S.C., provides, in part, that no appropriated funds may be expended by the recipient of a Federal contract, grant, loan, or cooperative agreement to pay any person for influencing or attempting to influence an officer or employee of any government agency, Member of Congress, officer or employee of Congress, or employee of a Member of Congress, in the awarding of any Federal contract, the making of any Federal grant, the making of any Federal loan, the entering into of any cooperative agreement, or the extension, continuation, renewal, amendment, or modification of any Federal contract, grant, loan, or cooperative Agreement.

CHILD SUPPORT PAYMENTS: By signing the Contract the Consultant certifies, as of the date of signing the Agreement, that they are (a) not under an obligation to pay child support; or (b) is under such an obligation and is in good standing with respect to that obligation; or (c) has agreed to a payment plan with the Vermont Office of Child Support Services and is in full compliance with that plan. If the Consultant is a sole proprietorship, the Consultant’s statement applies only to the proprietor. If the Consultant is a partnership, the Consultant's statement applies to all general partners with a permanent residence in Vermont. If the Consultant is a corporation, this provision does not apply.

TAX REQUIREMENTS: By signing the Agreement, the Consultant certifies, as required by law under 32 VSA, Section 3113, that under the pains and penalties of perjury, he/she is in good standing with respect to payment, or in full compliance with a plan to pay, any and all taxes due the State of Vermont as of the date of signature on the Agreement.

ENERGY CONSERVATION: The Consultant shall recognize mandatory standards and policies relating to energy efficiency that are contained in the State energy conservation plan issued in compliance with the Energy Policy and Conservation Act P.L. 94-165.

4. CONTRACTUAL AGREEMENTS

REGISTRATION: The Consultant agrees to be registered with the Vermont Secretary of State's office as a corporation doing business in the State of Vermont at all times this contract is effective. This registration must be complete prior to contract execution.

ADMINISTRATION REQUIREMENTS: By signing the Agreement the Consultant agrees to comply with the following provisions and certifies that he/she or they are in compliance with the provisions of 49 CFR § 18.36 Procurement (i) Contract Provisions with principal reference to the following:

(a) Copeland "Anti-Kickback" Act. For any Federal-Aid Contracts or subcontracts for construction or repair, the Consultant agrees to comply with the Copeland "Anti-Kickback" Act, 18 U.S.C. § 874, as supplemented by Department of Labor Regulations, 29 CFR § 3.

(b) Davis-Bacon Act. For any Federal-Aid construction contracts in excess of $2,000, the Consultant agrees to comply with the Davis-Bacon Act 40 U.S.C. §§ 276a to a-7, as supplemented by Department of Labor Regulations, 29 CFR § 5.

(c) Work Hours. For any Federal-Aid construction contracts in excess of $ 2,000, or in excess of $ 2,500 for other contracts involving employment of mechanics or laborers, the Consultant agrees to comply with the Contract Working Hours and Safety Standards Act, 40 U.S.C. § 327-330,as annexed by Department of Labor Regulations, 29 CFR § 5.

(d) Proprietary Rights. The parties under the Agreement hereby mutually agree that, if patentable discoveries or inventions should result from work performed under the Agreement, all rights accruing from such discoveries or inventions shall be the sole property of the Consultant. The Consultant, however, agrees to and does hereby grant to the Municipality, the State of Vermont and the United States Government an irrevocable, nonexclusive, non-transferable, and royalty-free license to practice each invention in the manufacture, use, and disposition, according to law, of any article or material or use of method that may be developed, as a part of the work under the Agreement.

(e) Publications. All data, EDM, valuable papers and documents produced under the terms of the Agreement, shall become the property of the Municipality. The Consultant agrees to allow access to all data, EDM, valuable papers and documents at all times. The Consultant shall not copyright any material originating under the Agreement without prior written approval of the Municipality.

PERSONNEL REQUIREMENTS AND CONDITIONS: A Consultant shall employ only qualified personnel, for responsible authority to supervise the work. The

Municipality shall have the right to approve or disapprove key personnel assigned to administer activities related to the Agreement.

Except with the approval of the Municipality, during the life of the Agreement, the Consultant shall not employ:

(a) Personnel on the payroll of the Municipality who are directly involved with the awarding, administration, monitoring, or performance of the Agreement or any project(s) that are the subjects of the Agreement.

(b) Any person so involved within one (1) year of termination of employment with the Municipality.

The Consultant warrants that no company or person has been employed or retained, other than a bonafide employee working solely for the Consultant, to solicit or secure this Agreement, and that no company or person has been paid or has an agreement with the Consultant to be paid, other than a bonafide employee working solely for the Consultant, any fee, commission, percentage, brokerage fee, gift, or any other consideration, contingent upon or resulting from the award or making of the Agreement. For breach or violation of this warranty, the Municipality shall have the right to annul the Agreement, without liability to the Municipality, and to regain all costs incurred by the Municipality in the performance of the Agreement.

The Municipality reserves the right to require removal of any person employed by a Consultant, from work related to the Agreement, for misconduct, incompetence, or negligence, in the opinion of the Municipality in the due and proper performance of its duties, or who neglects or refuses to comply with the requirements of the Agreement.

TRANSFERS, SUBLETTING, ETC: A Consultant shall not assign, sublet, or transfer any interest in the work, covered by an Agreement, without prior written consent of the Municipality and further, if any subconsultant participates in any work involving additional services, the estimated extent and cost of the contemplated work must receive prior written consent of the Municipality. The approval or consent to assign or sublet any portion of the work, shall in no way relieve the Consultant of responsibility for the performance of that portion of the work so transferred. The form of the subconsultant's agreement shall be as developed by the Consultant and approved by the Municipality. The Consultant shall ensure that adequate insurance coverage exists for any operations to be performed by any subconsultant.

The services of the Consultant, to be performed under the Agreement, are personal and shall not be transferred without written authorization of the Municipality and, when applicable, approved by the State of Vermont and FHWA. Any authorized subagreements, exceeding ten thousand dollars in cost, shall contain all of the same provisions specified for and attached to the original Agreement with the Municipality.

BEGINNING AND COMPLETION OF WORK: See Section 2 in AGREEMENT

“Beginning, Completion and Termination of Work”.

CONTINUING OBLIGATIONS: The Consultant agrees that if, because of death or other occurrences, it becomes impossible to effectively perform its services in compliance with the Agreement, neither the Consultant nor its surviving members shall be relieved of their obligations to complete the Agreement. However, the Municipality may terminate the Agreement if it considers a death or incapacity of any members to be a loss of such magnitude that it would affect the firm's ability to satisfactorily execute the Agreement.

OWNERSHIP OF THE WORK: The Consultant agrees that the ownership of all studies, data sheets, survey notes, subsoil information, drawings, tracings, estimates, specifications, proposals, diagrams, calculations, EDM and other material prepared or collected by the Consultants, hereafter referred to as "instruments of professional service", shall become the property of the Municipality as they are prepared and/or developed during execution of the Agreement.

The Consultant shall surrender to the Municipality upon demand or submit for inspection at any time any instruments of professional service that have been collected, undertaken or completed by the Consultant pursuant to the Agreement. Upon completion of the work, in full, these instruments of professional service will be appropriately endorsed by the Consultant and turned over to the Municipality.

Data and publication rights to any instruments of service produced under this agreement are reserved to the Municipality and shall not be copyrighted by the Consultant at any time without written approval of the Municipality. No publications or publicity of the work, in part or in total, shall be made without the agreement of the Municipality, except that Consultants may in general terms use previously developed instruments of professional service to describe its abilities for a project in promotional materials.

RECORDS RETENTION: The Consultant agrees to retain, in company files, all books, documents, EDM, valuable papers, accounting records, and other evidence, pertaining to costs incurred for work performed under the Agreement, for a period of at least three (3) years after the final "date of acceptance" by the Municipality, unless otherwise notified by the Municipality. The Consultant further agrees that the Municipality, the State of Vermont, FHWA or other authorized representatives of the Federal Government, shall have access to all the above information for the purpose of review and audit during the Agreement period and anytime within the aforementioned retention period. Copies of all the above referenced information shall be provided to the Municipality if requested.

APPEARANCES:

(a) Hearings and Conferences. The Consultant shall provide professional services required by the Municipality and necessary for furtherance of any work covered under the Agreement. Professional services shall include appropriate

representation at design conferences, public gatherings and hearings, and appearances before any legislative body, commission, board, or court, to justify, explain and defend its contractual services covered under the Agreement.

The Consultant shall perform any liaison that the Municipality deems necessary for the furtherance of the work and participate in conferences with the Municipality, at any reasonable time, concerning interpretation and evaluation of all aspects covered under the Agreement.

The Consultant further agrees to participate in meetings with the Municipality, the State of Vermont, FHWA, and any other interested or affected participant, for the purpose of review or resolution of any conflicts pertaining to the Agreement.

The Consultant shall be equitably paid for such services and for any reasonable expenses incurred in relation thereto in accordance with the Contract document.

(b) Appearance as Witness. If and when required by the Municipality, a Consultant, or an appropriate representative, shall prepare and appear for any litigation concerning any relevant project or related Agreement, on behalf of the Municipality. The Consultant shall be equitably paid for such services and for any reasonable expenses incurred in relation thereto, in accordance with the Contract document.

CHANGES AND AMENDMENTS: No changes or amendments of the Agreement shall be effective unless documented in writing and signed by authorized representatives of the Municipality and the Consultant.

APPENDICES: The Municipality may attach, to these specifications, appendices containing various forms and typical sample sheets for guidance and assistance to the Consultant in the performance of the work. It is understood, however, that such forms and samples may be modified, altered, and augmented from time to time by the Municipality as occasions may require. It is the responsibility of the Consultant to ensure that they have the latest versions applicable to the Agreement.

EXTENSION OF TIME: The Consultant agrees to prosecute the work continuously and diligently and no charges or claims for damages shall be made by the Consultant for delays or hindrances, from any cause whatsoever, during the progress of any portion of services specified in the Agreement. Such delays or hindrances, if any, may be compensated for by an extension of time for such reasonable period as the Municipality may decide. Time extensions shall be granted by amendment, only for excusable delays, such as delays beyond the control of the Consultant and without the fault or negligence of the Consultant.

SETTLEMENTS OF MISUNDERSTANDINGS: In order to prevent misunderstandings and litigation, it is mutually agreed by all parties that the selectboard and/or city council shall act as referee on all questions arising under the terms of an

Agreement and that the decision of this governing body in such cases shall be binding upon both parties.

Agreements subjecting costs to final audit, an administrative review regarding the audit will be sent to the Consultant. Any dispute arising from an administrative decision shall be appealed in writing within thirty (30) days of receipt.

FAILURE TO COMPLY WITH TIME SCHEDULE: It is mutually understood and agreed to, that neither party hereto shall be held responsible for delay in performing the work encompassed herein, when such delay is due to unforeseeable causes such as acts of God, or a public enemy, fire, strikes, floods, or legal acts of public authorities. In the event that any such causes for delay are of such magnitude as to prevent the complete performance of the Agreement within two (2) years of the originally scheduled completion date, either party may by written notice request to amend or terminate the Agreement.

MUNICIPALITY'S OPTION TO TERMINATE: The Agreement may be terminated in accordance with the following provisions:

(a) Breach of Contract. Administrative remedies - the Municipality reserves the right to terminate a Contract for breach of Contract agreements. Termination for breach of Contract will be without further compensation to the Consultant.

(b) Termination for Cause. The Municipality reserves the right, upon written notice to the Consultant, to terminate the Agreement, as of a date to be specified by the Municipality, if the Consultant fails to complete the designated work to the satisfaction of the Municipality, within the time schedule agreed upon. The Consultant shall be compensated on the basis of the work performed and accepted by the Municipality at the date of final acceptance of the Agreement.

(c) Termination for Convenience. In addition to its rights and options to terminate an Agreement as provided herein, the Municipality may, at any time prior to completion of services specified under an Agreement, terminate the Agreement by submitting written notice to a Consultant, within not less than fifteen (15) days prior to the effective date, via certified or registered mail, of its intention to do so. If the termination is for the Municipality's convenience, payment to the Consultant will be made promptly for the amount of any fees earned to the date of the notice of termination, less any payments previously made. However, if a notice of termination is given to a Consultant prior to completion of twenty (20) percent of the estimated services, as set forth in the approved Work Schedule and Progress Report, the Consultant will be reimbursed for that portion of any reasonable and necessary expenses incurred to date of the notice of termination, that are in excess of the amount earned under its approved fee to the date of said termination. Such requests for reimbursement shall be supported with factual data and shall be subject to the Municipality's approval. The Consultant shall make no claim for additional compensation against the Municipality by reason of such

termination.

5. OPERATIONAL STANDARDS

RESPONSIBILITY FOR SUPERVISION: The Consultant shall assume primary responsibility for general supervision of Consultant employees and his/her or their subconsultants for all work performed under the Contract and shall be solely responsible for all procedures, methods of analysis, interpretation, conclusions and contents of work performed under the Agreement.

INDEPENDENCE: The Consultant shall act in an independent capacity and not as officers or employees of the Municipality.

WORK SCHEDULE AND PROGRESS REPORT: See Main AGREEMENT Section 4 " Expected Deliverables" for Work Schedule and Section 5 "Conditions" for progress report requirements.

UTILITIES: Whenever a facility or component of a private, public, or cooperatively-owned utility will be affected by any proposed construction, the Consultant will counsel with the Municipality, plus achieve any necessary contacts and discussions with the affected owners, regarding any requirement necessary for revisions of facilities or existing installations, both above and below ground. Any such installations must be completely and accurately exhibited on any detail sheets or plans. The Consultant shall inform the Municipality, in writing, of any such contacts and the results thereof.
PUBLIC RELATIONS: Whenever it is necessary to perform work in the field, particularly with respect to reconnaissance, the Consultant will endeavor to maintain good relations with the public and any affected property owners. Personnel employed by or representing the Consultant shall conduct themselves with propriety. The Consultant agrees to inform property owners and/or tenants, in a timely manner, if there is need for entering upon private property as an agent of the Municipality, in accordance with VSA Title 19 § 35 and §503, in order to accomplish the work under the Agreement. The Consultant agrees that any work will be done with minimum damage to the land and disturbance to the owner. Upon request of the Consultant, the Municipality shall furnish a letter of introduction to property owners soliciting their cooperation and explaining that the Consultant is acting as an agent of the Municipality.

INSPECTION OF WORK: The Municipality shall, at all times, have access to the Consultant's work for the purposes of inspection, accounting, and auditing, and the Consultant shall provide whatever access is considered necessary to accomplish such inspections. At any time, the Consultant shall permit the Municipality or representative for the Municipality the opportunity to inspect any plans, drawings, estimates, specifications, or other materials prepared or undertaken by the Consultant pursuant to execution of the Agreement.

Conferences, visits to a site, or an inspection of the work, may be held at the request of any involved party or by representatives of the Municipality, the State of Vermont or

FHWA.

WRITTEN DELIVERABLES: See Main AGREEMENT, Section 4 "Expected Deliverables: Deliverable Standards"

6. PROJECT DEVELOPMENT AND STANDARDS

PLANS RECORDS AND AVAILABLE DATA: The Municipality agrees to make available, at no charge, for the Consultant's use all available data related to the Agreement including any preliminary plans, maps, drawings, photographs, reports, traffic data, calculations, EDM, valuable papers, topographic survey, utility location plats, or any other pertinent public records.

DESIGN STANDARDS: Unless otherwise specifically provided for in the Agreement, or directed in writing, Consultant services, studies or designs, that include or make reference to plans, specifications, special provisions, computations, estimates, or other data necessary for construction of a designed facility, shall be in conformance with applicable portions of the following specifications, manuals, codes or regulations, including supplements to or revisions thereof, adopted and in effect prior to award of the Agreement:

(a) VAOT'S latest edition of the Standard Specifications for Construction.
(b) VAOT'S Bridge Design Manual.
(c) All applicable AASHTO roadway, traffic, bridge, bicycle and pedestrian policies, guides and manuals.
(d) VAOT'S Manual on Survey.
(e) VAOT'S Right-of-Way Manual.
(f) The Highway Capacity Manual - Special Report 209.
(g) The ANSI/AASHTO/AWS D-1.5, Bridge Welding code.
(h) The MUTCD and Vermont Supplement requirements.
(i) The Standard Specifications for Structural Supports for Highway Signs, Luminaries and Traffic Signals
(j) Other Municipality directives and guidelines current at the time of the Agreement and as may be issued by the Municipality during the progress of the design.

In case of any conflict with the guidelines referenced, the Consultant is responsible to identify and follow any course of direction provided by the Municipality.

DEVELOPMENT OF PLANS: Unless otherwise indicated in an Agreement, the provisions of these specifications shall apply to any contract requiring preliminary engineering services in connection with highway, bridge, bicycle and pedestrian survey and design. The Consultant is responsible for the development of any and all work outlined in an Agreement.

The Municipality shall establish the termini of the project and may substantiate other conditions relative to locations established in the Agreement. When required under the

Agreement, the Consultant will produce an acceptable survey and/or set of plans between such termini and follow any established provisions.

Endorsement of a recommended alignment made, by the Municipality, does not relieve the Consultant of the responsibility for making changes occasioned as a result of an alignment not conforming to standards or good engineering practices when the design is advanced. Nor is the Consultant relieved of changes developed by normal refinements.

Changes in work or Supplemental Agreements, requested or required of the Consultant by the

Municipality, involving extra work or additional services must be properly documented and approved prior to initiating action of any work.

METRICATION: All work performed under a Contract shall be designed to comply with metrication units if specified in the Request for Proposals or the Scope of Work. Guide requirements for metric conversion shall follow criteria outlined in an AASHTO publication "Guide To Metric Conversion", copyright 1993. Copies of the Guide Requirements are available from AASHTO, 444 North Capitol St., N.W., Suite 225, Washington, DC 20001.

Unless otherwise required for special cases, the Consultant shall use the following conversions for metric units:

(a) Lengths. For lengths less than 1 kilometer use meters. For lengths less than 1 meter use millimeters. For lengths less than 1 millimeter use micrometers.

(b) Mass. For a mass less than 1 metric ton use kilograms. For a mass less than 1 kilogram use grams. For a mass less than 1 gram use milligrams.

(c) Liquid Volume. For liquid volumes less than 1 cubic meter use liters. For liquid volumes less than 1 liter use milliliters. A liter is one thousandth of a cubic meter or 1000 cubic centimeters.

(d) Solid Volume. For a solid volume less than 1 cubic meter use cubic millimeters.

(e) Area. For an area less than 1 hectare use square meters. For an area less than 1 square meter use square millimeters.

(f) Basic Engineering Conversion Factors.

1. Mass/Unit Length	Pounds/Linear Foot to kilograms/meter (kg/m)
2. Mass/Unit Area	Pounds/Square Foot to kilograms/square meter (kg/M^2)
3. Mass Density	Pounds/Cubic Foot to kilograms/cubic meter (kg/M^3)
4. Force	Pounds to newtons (N)

5. Pressure	Pounds/Square Foot to Pascal (Pa = N/M^2)
6. Bending Moment	Newton - meter (N*m)

ELECTRONIC DATA MEDIA: Consultant, subconsultants, or any representatives performing work related to the Agreement, are responsible to insure that all data and information created or stored on EDM is secure and can be duplicated if the EDM mechanism is subjected to power outage or damage.

REVIEWS AND ACCEPTANCES: All preliminary and detailed designs, plans, specifications, estimates or other documents prepared by the Consultant, shall be subject to review and endorsement by the Municipality.

Approval for any inspections or sequences of progress of work shall be documented by letters, memoranda or other appropriate written means.

A frequency for formal reviews shall be set forth in the Agreement. Informal reviews, conducted by the Municipality will be performed as deemed necessary. The Consultant shall respond to all official comments regardless of their source. The Consultant shall supply the Municipality with written copies of all correspondence relating to formal and informal reviews.

No acceptance shall relieve a Consultant of their professional obligation to correct any defects or errors in their work at their own expense.

7. PAYMENT FOR SERVICES RENDERED

PAYMENT PROCEDURES: The Municipality shall pay, or cause to be paid to the Consultant or the Consultant's legal representative, progress payments, that may be monthly or as otherwise accepted by the Municipality, as determined by the percentage of work completed, as documented by a progress report of such work duly attested, for each phase of the required services covered by the Agreement. When applicable, for the type of payment specified in the Agreement, the progress report shall summarize actual costs and any earned portion of fixed fee.

All invoices and correspondence shall indicate the applicable project name, project number and the Agreement number. When relevant, the invoice shall further be broken down in detail between projects.

When applicable, for the type of payment specified in the Agreement, expenses for meals and travel shall be limited to the current approved in-state rates, as determined by the State of Vermont's labor contract, and need not be receipted. All other expenses are subject to approval by the Municipality and must be accompanied with documentation to substantiate their charges.

No approval given or payment made under an Agreement, shall be conclusive evidence of the performance of said Agreement, either wholly or in part thereof, and no payment

shall be construed to be acceptance of defective work or improper materials.

The Municipality agrees to pay the Consultant and the Consultant agrees to accept, as full compensation, for performance of all services rendered and expenses encompassed in conformance therewith, the type of fee specified in the Contract.

(a) Indirect Cost Rates. For actual cost contracts, the Consultant is responsible for furnishing the Municipality with independently-prepared, properly supported, Indirect Cost Rates, in accordance with 48 CFR 52.216-7, for all time periods covered under the Agreement. These rates must be developed in accordance with the cost principles in 48 CFR Part 31. A Consultants overhead rate shall be based upon an actual audited overhead rate, unless otherwise specified in the Agreement.

(b) Contract Types. Contracts shall conform with 48 CFR Part 16 - TYPES OF CONTRACTS.

PAYMENT FOR ADDITIONS OR DELETIONS: The Municipality may, upon written notice, and without invalidating the Agreement, require any changes to, additions to, or deletions from, the originally contemplated extent of the work, prior to completion of the Agreement by means of an amendment to the original contract. Any adjustments of this nature shall be executed under the appropriate fee established in the Agreement, based on the adjusted quantity of work, except that any claim for extension of time caused thereby shall be adjusted at the time of ordering such addition or deletion.

PAYMENT FOR EXTRA WORK, ADDITIONAL SERVICES OR CHANGES: The Municipality may, upon written notice, and without invalidating the Agreement, require changes resulting from revision or abandonment of work already performed by the Consultant or changes in the scope of work.

The value of such changes, to the extent not reflected in other payments to the Consultant, shall be incorporated in an amendment and be determined by mutual agreement, by one or more of the following:

(a) Fixed Price. By a price that is not subject to any adjustment on the basis of the Consultant's expenses experienced in performing the work. The Consultant is fully responsible for all costs and resulting profit or loss.

(b) Rate Schedule. By unit prices designated in the Agreement, or by unit prices covered under any subsequent Agreements.

(c) Actual Cost. By amounts determined on the basis of actual costs incurred, as distinguished from forecasted expenditures.

No changes, for which additional fee payment is claimed, shall be made unless pursuant to a written order from the Municipality, and no claim shall be valid unless so ordered.

The Consultant agrees to maintain complete and accurate records, in a form satisfactory to the Municipality for all time devoted directly to same by Consultant employees. The Municipality reserves the right to audit the records of the Consultant related to any extra work or additional services. Any such services rendered shall be subject, in all other respects, to the terms of the Agreement. When changes are so ordered, no additional work shall be performed by the Consultant until an Agreement amendment has been fully executed, unless written notice to proceed is issued by the Municipality. Any claim for extension of time, that may be necessitated as a result of extra work or additional services and changes, shall be given consideration and evaluated insofar as it directly relates to the change.

ATTACHMENT D

ARTICLE VI. LIVABLE WAGES*

***Cross references:** Personnel, Ch. 24.

Sec. 21-80. Findings and purpose.
In enacting this article, the city council states the following findings and purposes:
(a) Income from full-time work should be sufficient to meet an individual's basic needs;
(b) The City of Burlington is committed to ensuring that its year-round employees (full and part time) have an opportunity for a decent quality of life and are compensated, and not dependent on public assistance, to meet their basic needs;
(c) The city is committed, through its contracts with vendors and provision of financial assistance, to encourage the private sector to pay its employees a livable wage and contribute to employee health care benefits;
(d) The creation of jobs that pay livable wages promotes the prosperity and general welfare of the city and its residents, increases consumer spending with local businesses, improves the economic welfare and security of affected employees and reduces expenditures for public assistance;
(e) It is the intention of the city council in passing this article to provide a minimum level of compensation for city employees and employees of entities that enter into service contracts or receive financial assistance from the City of Burlington.
(Ord. of 11-19-01)

Sec. 21-81. Definitions.
As used in this article, the following terms shall be defined as follows:
(a) *Contractor* or *vendor* is a person or entity that has a contract with the City of Burlington primarily for the furnishing of services (as opposed to the purchasing of goods) where the total amount of the contract or contracts exceeds fifteen thousand dollars ($15,000.00) for any twelve-month period, including any subcontractors of such contractor or vendor. A person or entity that has a contract with the City of Burlington for the use of property under the jurisdiction of the board of airport commissioners, or any person or entity that has a sublease or other agreement to perform services on such property, shall also be considered a contractor under this article.
(b) *Grantee* is a person or entity that is the recipient of financial assistance from the City of Burlington in the form of grants administered by the city, including any contractors or subcontractors of the grantee, that exceeds fifteen thousand dollars ($15,000.00) for any twelve-month period.
(c) *Covered employer* means the City of Burlington (except that the Burlington School Department shall not be considered a covered employer), a contractor or vendor or a grantee as defined above.
(d) *Covered employee* means an "employee" as defined below, who is employed by a "covered employer," subject to the following:

(1) An employee who is employed by a contractor or vendor is a "covered employee" during the period of time he or she expends on furnishing services funded by the city, notwithstanding that the employee may be a seasonal employee;
(2) An employee who is employed by a grantee who expends at least half of his or her time on activities funded by the city is a "covered employee".
(e) *Employee* means a person who is employed on a full-time or part-time regular basis (i.e., nonseasonal). "Employee" shall not refer to volunteers working without pay or for a nominal stipend, persons working in an approved apprenticeship program, persons who are hired through youth employment programs or student workers or interns participating in established educational internship programs.
(f) *Employer assisted health care* means health care benefits provided by employers for employees (or employees and their dependents) at employer cost or at an employer contribution towards the purchase of such health care benefits provided that the employer cost or contribution consists of at least one dollar and twenty cents ($1.20) per hour. (Said amount shall be adjusted every two (2) years for inflation, by the chief administrative officer of the city.)
(g) *Livable wage* has the meaning set forth in section 21-82.
(Ord. of 11-19-01)

Sec. 21-82. Livable wages required.
(a) Every covered employer shall pay each and every covered employee at least a livable wage as established under this article.
(1) For a covered employer that provides employer assisted health care, the livable wage shall be at least nine dollars and ninety cents ($9.90) per hour on the effective date of this article [Dec. 19, 2001].
(2) For a covered employer that does not provide employer assisted health care, the livable wage shall be at least eleven dollars and sixty-eight cents ($11.68) per hour on the effective date of this article [Dec. 19, 2001].
(3) Tipped covered employees and other covered employees whose compensation consists of more than hourly wages shall be paid an hourly wage which, when combined with the other compensation, will at least equal the livable wage as established under this article.
(b) The amount of the livable wage established in this section shall be adjusted by the chief administrative officer of the city, as of JulyMarch first of each year based upon a report of the Joint Fiscal Office of the State of Vermont that describes the basic needs budget for a single person utilizing a model of two (2) adults residing in a two (2) bedroom living unit in an urban area with the moderate cost food plan. Should there be no such report from the joint fiscal office, the chief administrative officer shall obtain and utilize a basic needs budget that applies a similar methodology. Prior to MayMarch first of each calendar year, the chief administrative officer will provide public notice of this adjustment by publishing a notice in a newspaper of general circulation, by posting a written notice in a prominent place in City Hall, by sending written notice to the city council and, in the case of covered employers that have provided an address of record to the chief administrative officer, by written letter to each such covered employer.

(c) Covered employers shall provide at least twelve (12) compensated days off per year for full-time covered employees, and a proportionate amount for part-time covered employees, for sick leave, vacation or personal leave.
(Ord. of 11-19-01)

Sec. 21-83. Applicability.
(a) This article shall apply to any service contract or grant, as provided by this article that is awarded or entered into after the effective date of the article [Dec. 19, 2001]. After the effective date of the article, entering into any agreement or an extension, renewal or amendment of any contract or grant as defined herein shall be subject to compliance with this article.
(b) The requirements of this article shall apply during the term of any service contract subject to the article. Covered employers who receive grants shall comply with this article during the period of time the city's funds are being expended.
(Ord. of 11-19-01)

Sec. 21-84. Enforcement.
(a) The City of Burlington shall require, as a condition of any contract or grant covered by this section, that the affected covered employer submit a written certification, under oath, confirming payment of a livable wage as a condition of entering into said contract or grant. The affected covered employer shall agree to post a notice regarding the applicability of this section in any workplace or other location where employees or other persons contracted for employment are working. The affected covered employer shall agree to provide payroll records or other documentation, as deemed necessary by the chief administrative officer of the City of Burlington within ten (10) business days from receipt of the city's request.
(b) The City of Burlington shall have the right to modify, terminate and/or seek specific performance of any contract or grant with an affected covered employer from any court of competent jurisdiction, if the affected covered employer has not complied with this article.
(c) Any covered employer who violates this article may be barred from receiving a contract or grant from the city for a period up to two (2) years from the date of the finding of violation.
(d) A violation of this article shall be a civil offense subject to a civil penalty of from twoone hundred dollars ($2100.00) to five hundred dollars ($500.00). All law enforcement officers and any other duly authorized municipal officials are authorized to issue a municipal complaint for a violation of this article. Each day any covered employee is not compensated as required by this article shall constitute a separate violation.
(Ord. of 11-19-01; Ord. of 2-17-04)

Sec. 21-85. Other provisions.
(a) No affected covered employer shall reduce the compensation, wages, fringe benefits or leave available to any covered employee in order to pay the livable wage required by this article. Any action in violation of this paragraph shall be deemed a violation of this article subject to the remedies of section 21-84.

(b) Where pursuant to a contract for services with the city, the contractor or subcontractor incurs a contractual obligation to pay its employees certain wage rates, in no case except as stated in subsection 21-85(c), shall the wage rates paid pursuant to that contract be less than the minimum livable wage paid pursuant to this article.
(c) Notwithstanding subsection 21-85(b), where employees are represented by a bargaining unit or labor union pursuant to rights conferred by state or federal law and a collective bargaining labor agreement is in effect governing the terms and conditions of employment of those employees, this chapter shall not apply to those employees, and the collective bargaining labor agreement shall control.
(d) Covered employers shall inform employees making less than twelve dollars ($12.00) per hour of their possible right to the Earned Income Tax Credit under federal and state law.
(e) The chief administrative officer of the city shall have the authority to promulgate rules as necessary to administer the provisions of this article, which shall become effective upon approval by the city council.
(Ord. of 11-19-01)

Sec. 21-86. Exemptions.
A partial or complete exemption from the requirement of this article may be authorized based upon a determination that compliance with the livable wage requirement would cause substantial economic hardship. Requests for exemption shall be submitted to the chief administrative officer. The finance board of the city shall consider the request for exemption with prior notice provided to the city council. A unanimous decision by the finance board shall be final. A split decision by the finance board is reviewable by the city council not later than the next meeting of the city council which occurs after the date of the finance board decision.
(Ord. of 11-19-01)

Sec. 21-87. Severability.
If any part or parts or application of any part of this article is held invalid, such holding shall not affect the validity of the remaining parts of this article.
(Ord. of 11-19-01)
Secs. 21-88, 21-89. Reserved.

Livable Wage Ordinance

Are You Receiving A Livable Wage?

The Burlington Livable Wage Ordinance requires that if you are working on a specific City of Burlington service contract or subcontract above a certain amount your employer must pay you at least $13.94 an hour **with health insurance**.

$13.94

If you are working on a specific City of Burlington service contract or subcontract above a certain amount your employer must pay you at least $15.83 an hour **without health insurance.**

$15.83

What Are Your Rights Under the Livable Wage?

All employees who work directly on a City of Burlington service contract or a subcontract may be eligible. To find out if you are covered by the Livable Wage Ordinance you may call the Office of the Chief Administrative Officer at 802/865-7000.

Are You Eligible to Receive The Livable Wage?

Covered employees are required to be paid at least the above amounts. If you are covered and your employer reduces your pay, your employer shall be considered in violation. You are protected by law if you assert your rights under the Livable Wage Ordinance.

Why Report A Livable Wage Violation?

If your employer is required to be paying you the Livable Wage and is not, he or she may be required to pay you back wages and be subject to any other appropriate action as outlined in the Ordinance.

Employee Earned Income Tax Credit

Are you raising a family and making less than $30,000? If so, you could be eligible to receive the Earned Income Tax Credit (EITC.) You may even be eligible if your income is so low that you do not owe any taxes. The EITC can reduce your taxes or provide a cash refund. There is a federal and state EITC, so ask about both. To find out if you qualify and how to get this benefit speak to your employer's payroll clerk or call IRS at 1.800.TAX.1040.

To file a complaint Contact:
Office of the Chief Administrative Officer, 149 Church Street, Burlington, VT 05401
802-865-7019

Revised 6/13

Certification of Compliance with the City of Burlington's Livable Wage Ordinance

I, _____, on behalf of _____ (Contractor) and in connection with the _____(project), hereby certify under oath that (1) Contractor shall comply with the City of Burlington's Livable Wage Ordinance; (2) as a condition of entering into this contract or grant, Contractor confirms that all covered employees, as defined by Burlington's Livable Wage Ordinance, shall be paid a livable wage for the term of the contract as determined and adjusted annually by the City of Burlington's Chief Administrative Officer, (3) a notice regarding the applicability of the Livable Wage Ordinance shall be posted in the workplace or other location where covered employees work, and (4) payroll records or other documentation, as deemed necessary by the Chief Administrative Officer, shall be provided within ten (10) business days from receipt of the City's request.

Dated at _____, Vermont this ___ day of _____, 2013.

By:_____
Duly Authorized Agent

Subscribed and sworn to before me: _____
Notary

Certification of Compliance with the City of Burlington's Livable Wage Ordinance

Article VII Outsourcing

It is the policy of the City of Burlington to let service contracts to contractors, subcontractors and vendors who perform work in the United States.

(Ord. of 11-21-05/12-21-05)

Sec. 21-91. - Definitions.

(a)

Contractor or *vendor.* A person or entity that has a contract with the City of Burlington primarily for the furnishing of services (as opposed to the purchasing of goods), including any subcontractors of such contractor or vendor.

(b)

Government funded project. Any contract for services which involves any city funds and the total amount of the contract is fifty thousand dollars ($50,000.00) or more. Burlington School Department contracts shall not be considered government funded projects under this article.

(c)

Outsourcing. The assigning or reassigning, directly, or indirectly through subcontracting, of services under a government funded project to workers performing the work outside of the United States.

(Ord. of 11-21-05/12-21-05)

Sec. 21-92. - Implementation.

(a)

No contract for a government funded project shall be let to any contractor, subcontractor, or vendor who is outsourcing, or causing the work to be performed outside of the United States or Canada.

(b)

Prior to the commencement of work on a government funded project a contractor, subcontractor or vendor shall provide written certification that the services provided under the contract will be performed in the United States or Canada.

(Ord. of 11-21-05/12-21-05)

Sec. 21-93. - Exemption.

An exemption from requirements of this article may be authorized by the chief administrative officer based upon a determination that the services to be performed for the government funded project are not available in the United States or Canada at a reasonable cost. Any such exemption decision by the chief administrative officer shall be reported to the board of finance in writing within five (5) days. The board of finance may, if it should vote to do so, override the exemption decision if such vote occurs within fourteen (14) days of the date of the chief administrative officer's communication to such board.

(Ord. of 11-21-05/12-21-05)

Sec. 21-94. - Enforcement.

(a)

Any contractor, subcontractor or vendor who files false or materially misleading information in connection with an application, certification or request for information pursuant to the provisions of this article or outsources work on a government funded project shall be deemed to be in violation of this article.

(b)

A violation of this article shall be a civil offense subject to a civil penalty of from one hundred dollars ($100.00) to five hundred ($500.00). All law enforcement officers and any other duly authorized municipal officials are authorized to issue a municipal complaint for a violation of this article. Each day any violation of any provision of this article shall continue shall constitute a separate violation.

(c)

The City of Burlington shall have the right to modify, terminate and or seek specific performance of any contract for a government funded project if the contractor, subcontractor or vendor has not complied with this article.

(Ord. of 11-21-05/12-21-05)

Secs. 21-95—21-99. - Reserved.

Certification of Compliance with the City of Burlington's Outsourcing Ordinance

I, _____, on behalf of _____ (Contractor) and in connection with the _____(project), hereby certify under oath that (1) Contractor shall comply with the City of Burlington's Outsourcing Ordinance (Ordinance §§ 21-90 – 21-93); (2) as a condition of entering into this contract or grant, Contractor confirms that the services provided under the above-referenced contract will be performed in the United States or Canada.

Dated at _____, Vermont this ___ day of _____, 2013.

By:_____
Duly Authorized Agent

Subscribed and sworn to before me: _____
Notary

ARTICLE VIII. - UNION DETERRENCE

Sec. 21-100. - Policy.
Sec. 21-101. - Definitions.
Sec 21-102. - Implementation
Sec. 21-103. - Enforcement
Secs. 21-104—21-110. - Reserved.

Sec. 21-100. - Policy.

It is the policy of the City of Burlington to limit letting contracts to organizations that provide union deterrence services to other companies.

(Ord. of 3-27-06/4-26-06)

Sec. 21-101. - Definitions.

(a) *Contractor or vendor.* A person or entity that has a contract with the City of Burlington primarily for the furnishing of services (as opposed to the purchasing of goods), including any subcontractors of such contractor or vendor.

(b) *Government funded project.* Any contract for services which involves any City funds and the total amount of the contract is fifteen thousand dollars ($15,000.00) or more. Burlington School Department contracts shall not be considered government funded projects under this article.

(c) *Union deterrence services.* Services provided by a contractor, subcontractor or vendor that are not restricted to advice concerning what activities by an employer are prohibited and permitted by applicable laws and regulations, but extend beyond such legal advice to encouraging an employer to do any of the following:

1) Hold captive audience, (i.e., mandatory) meetings with employees encouraging employees to vote against the union;
2) Have supervisors force workers to meet individually with them to discuss the union;
3) Imply to employees, whether through written or oral communication, that their employer may have to shut down or lay people off if the union wins the election;
4) Discipline or fire workers for union activity;
5) Train managers on how to dissuade employees from supporting the union.

(d) *Substantial portion of income.* For the purposes of this article, substantial portion of income shall mean greater than ten (10) percent of annual gross revenues or one hundred thousand dollars ($100,000.00), whichever is less.

(Ord. of 3-27-06/4-26-06)

Sec 21-102. - Implementation

(a) No contract for a government funded project shall be let to any contractor, subcontractor, or vendor who

1) Advises or has advised an employer to conduct any illegal activity in its dealings with a union.
2) Advertises union deterrence services as specialty services;
3) Earns a substantial portion of its income by providing union deterrence services to other companies in order to defeat union organizing efforts.

(b) Prior to the commencement of work on a government funded project a contractor, subcontractor or vendor shall provide written certification that it has not advised the conduct of any illegal activity, it does not currently, nor will it over the life of the contract provide union deterrence services in violation of this article.

(Ord. of 3-27-06/4-26-06)

Sec. 21-103. - Enforcement

(a) Any contractor, subcontractor or vendor who files false or materially misleading information in connection with an application, certification or request for information pursuant to the provisions of this article or provided union deterrence services during the life of a contract for a government funded project shall be deemed to be in violation of this article.

(b) The City of Burlington shall have the right to modify, terminate and or seek specific performance of any contract for a government funded project if the contractor, subcontractor or vendor has not complied with this article.

(Ord. of 3-27-06/4-26-06)

Secs. 21-104—21-110. - Reserved.